Installation and Operation Manual

Model HT202A2 & HT204A2
Precision Moisture System
& Optional HT238DM Dye Sprayer

HarvestTec®

EST. 1976

HT202A2, HT204A2 & HT238DM - 26
9/26

Table of Contents

	Page
Introduction and Tools Needed	**2**
Installation	**3-10**
Star Wheel Moisture Sensors	3-5
Dual-Pad Moisture Sensor*	6-7
ISO Moisture Module, Harness Routing & Connections	9-10
HT202A2 -Single Chamber Balers	
HT204A2 -Double Chamber Balers	10
Display Setup and Operation	**11-12**
Optional HT238DM Dye Marker	**13-17**
Parts Breakdown	13
Installation	14-15
Control Setup	16
First Time and Annual Startup	16
Plumbing Diagram	17
Troubleshooting and Maintenance	17
Pin Outs	**18**
Warranty Statement	**19**

Introduction

Congratulations on purchasing a Harvest Tec HT202A2, HT204A2 Moisture System and/or the optional HT238DM Dye Sprayer Marking System. When attached to the SimplEbale system, this kit will allow you to read instantaneous moisture. The optional HT238DM will visibly mark section areas on your bales that meet or exceed the indicated threshold level.

The HT202A2 includes: Star Wheel Moisture Sensors, Twine Diverters, Wire Harness and ISO Moisture Module; HT204A2 includes additional Dual Pad Moisture Sensor*. The optional HT238DM includes: Dye Tank, Pump, Plumbing, Mounting Hardware and Harness. There are parts breakdowns in the manual to reference if replacement parts are needed. All replacement parts and dye refills can be ordered through your local equipment dealer or directly through Harvest Tec.

*Patent Pending

Tools Needed

Standard wrench set	Hammer	Straight edge
Standard socket set	Tape measure	Metal drilling and cutting tools
Center punch	Marker	

Star Wheel Sensor Kit (030-4642NG)
Factory Moisture Systems – Reinforced Yellow Block 2026

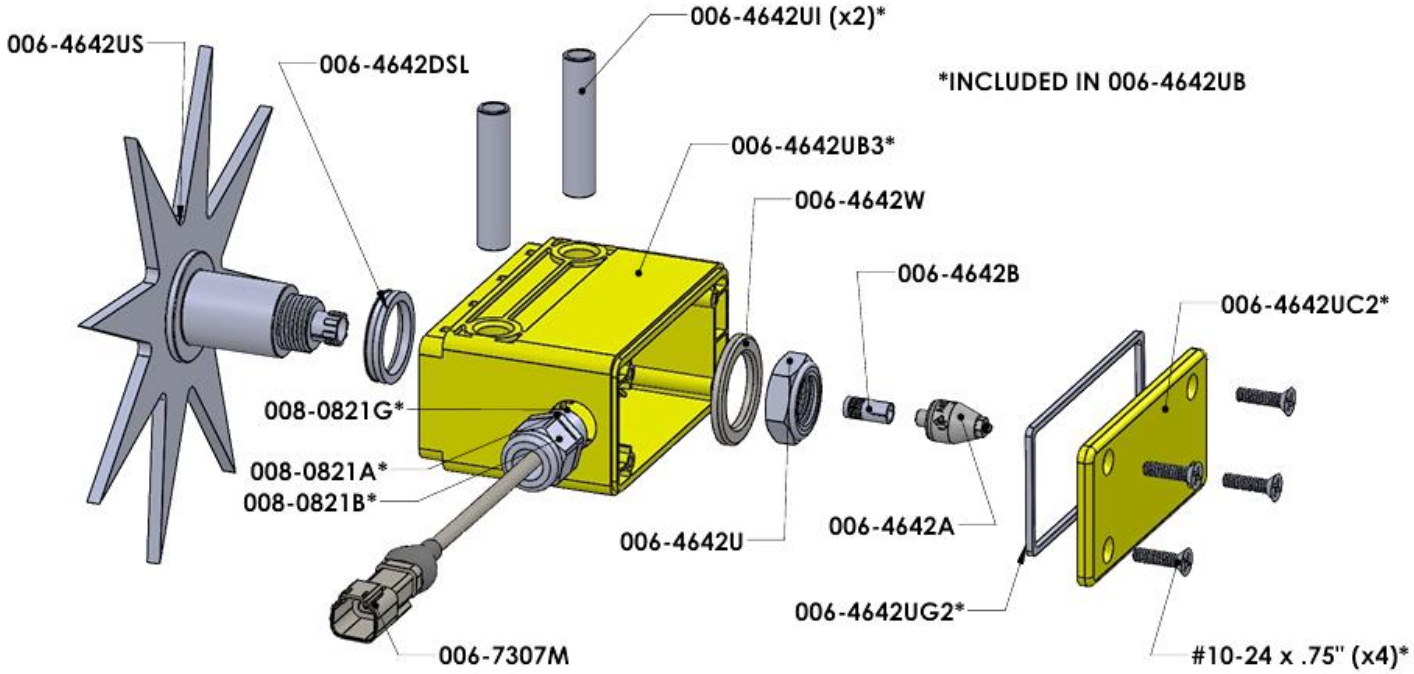

Description	Part#	Qty
Star Wheel (includes swivel insert)	006-4642US	1
Dust Seal Gasket	006-4642UG	1
Star Wheel Block Only	006-4642UB3	1
Star Wheel Block End Cap	006-4642UEC	1
Block Inserts	006-4642UI	2
Wire Compression Grommet	008-0821A	1
Grommet Locking Nut (internal)	008-0821B	1
Washer for Wire Grommet	008-0821G	1
Bearing Washer	006-4642W	1
Star Wheel Nut	006-4642U	1
Swivel Insert	006-4642B	1
Electric Swivel	006-4642A	1
Star Wheel Block Gasket	006-4642UG2	1
Star Wheel Block Cover	006-4542UC2	1
Moisture Harness Plug (2 Pin)	006-7307M	1

Description	Part#
Parts Not Pictured:	
Star Wheel Spacer Plate	001-6707ES
Star Wheel Mounting Hardware (5/16" x 3-1/4" Allen Head Screws, nuts, locks and washers)	
Twine Guard -Left	001-4645H
Twine Guard -Right	001-4644H
Star Wheel Drilling Template (HT204A2 Only)	001-4642T
Replacement Star Wheel Block*	001-4642UB
Complete NG Star Wheel Assembly	**030-4642U**
Complete NG Sensor Kit (Inc. 2 NG star wheels, spacer plates, both twine guards & hardware)	**030-4642NG**

Moisture Sensor Mounting - HT202A2 Kits

Star Wheel Moisture Sensor Kit (030-4642NG) Only

The Star Wheels are to be mounted on top of the baler, just behind the bale chamber front cross support **(A)**, or, if steaming bales place Star Wheels at the end of the bale chute **(B).** The side of the white block closest to the Star Wheel will need to be lined up parrel to the inside edge of the bale chambers outside formed channel. Mark holes and drill with a 3/8” drill bit.

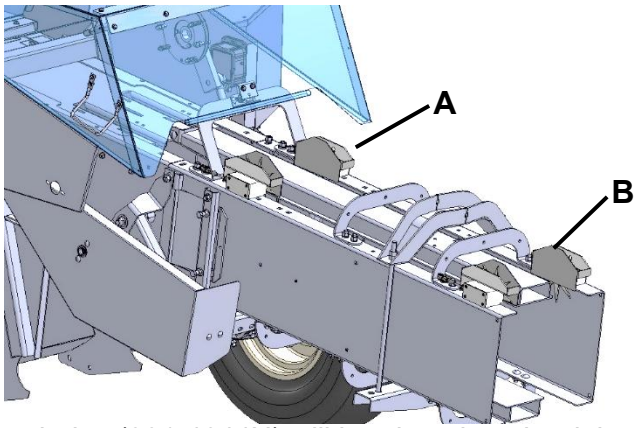

Each Star Wheel mounts using 5/16” x 3-1/4” BHCS (x2 each side), placing the button heads inside the bale chamber. Blocks are dropped down on the bolts with spacer plate (001-6707ES) between block and baler then secured in place with the star wheel twine guards (001-4645H and 001-4644H). Twine guard with the two extra holes (001-4644H) will be placed on the right side of the baler. Secure with 5/16” lock washers and nuts. Make sure blocks run parallel to the side channel of baler. Hand tighten with wrench or ratchet - not exceed 13 ft-lb torque. **DO NOT USE AN IMPACT TO TIGHTEN.** Over torquing star wheel mounting hardware can cause pre-mature wear of the star wheel blocks.

Alternative Installation Option for Agco 3-Tie Balers

Star wheel sensors can be mounted on the side of the bale chamber, within the gap of the side compression doors. Position sensors opposite of one another and centered within the gap to ensure no contact is made with the metal bale chamber. Twine diverters are not used when mounted in this position.

Note - for steamer equipped balers: Ensure star wheels are positioned as far rearward on bale chute as possible for most accurate results in artificial moisture conditions.

Moisture Sensor Mounting – HT204A2 Kits

Star Wheel Moisture Sensors (030-4642U) and Dual-Pad Moisture Sensor* Assembly (030-4643DB) (*Patent Pending)

Center Rail Removal

Moisture sensors are mounted in each of the bale chambers. Remove the center rail assembly of each bale chamber to allow for clearance and installation. Unbolt the two carriage bolts at the front of each chamber and the single longer bolt that fasten the center rails to the rear tension beam. Drop the center rails down and remove from each of the bale chambers. Rails will be reinstalled once moisture sensors are installed into the bale chambers.

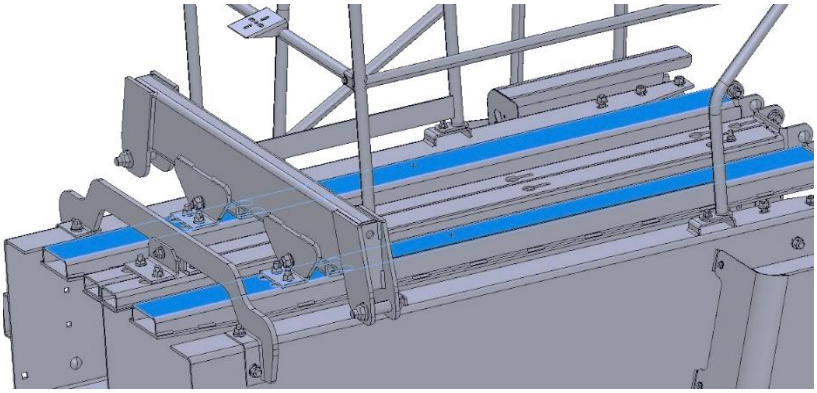

Outboard Star Wheel Installation

Locate the metal Star Wheel Drilling Template (001-4642T). Align the front edge of star wheel template against existing protruding plate in the RH bale chamber as shown (or approx. 3in. from the front edge of the bale chamber). Place the vertical flange of the template against the inside edge of the bale chamber flange. Clamp template in place and use 5/16” drill bit through the template to align and mark the two holes closest to the vertical flange. Remove template and use a smaller drill bit to make pilot holes through the chamber steel. Use 5/16” drill bit to bore out pilot holes to finished size. Repeat process for the LH bale chamber.

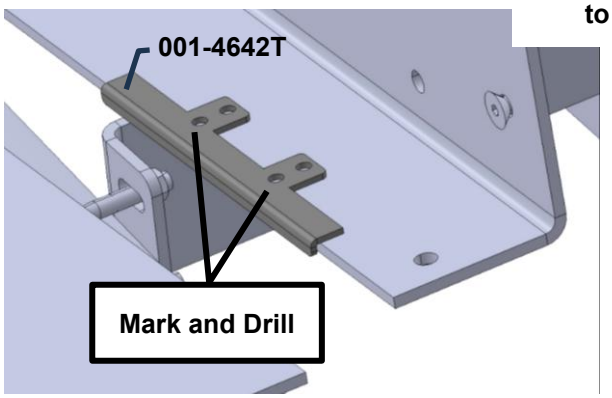

Star wheel sensors are mounted from the bottom sides of each bale chamber.

Twine Diverters (001-4645H & 001-4644H) are not used with the HT204A2 kit.

Install each of the star wheel assemblies by placing a Star Wheel Spacer Plate (001-6707ES) between each star wheel block and the baler for each bale chamber. Secure star wheels and spacer plates with supplied hardware 2x 5/16x3-1/4” BHCS, 5/16” lock washer, and nut. Hand tighten with wrench or ratchet - not exceed 13 ft-lb torque. **DO NOT USE AN IMPACT TO TIGHTEN.** Over torquing star wheel mounting hardware can cause pre-mature wear of the star wheel blocks.

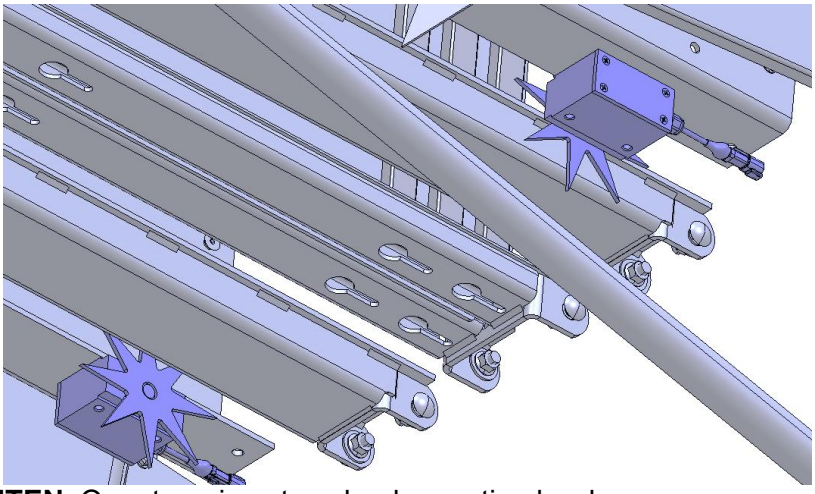

Dual-Pad Moisture Sensor Assembly (030-4643DB)*
Used with HT204A2 Only

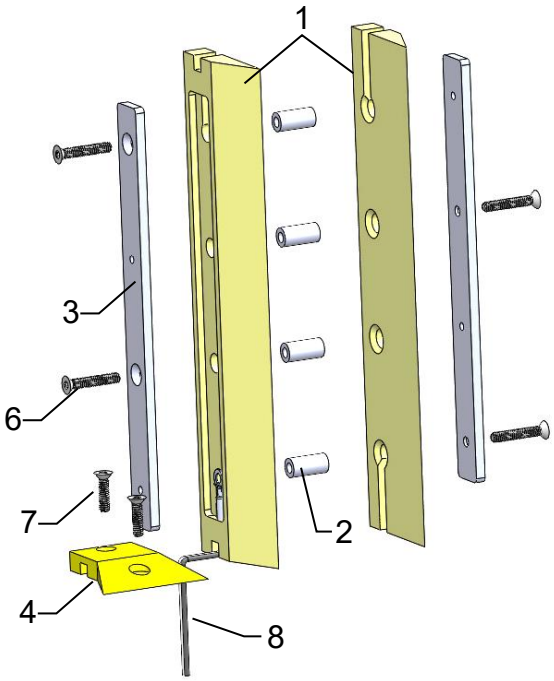

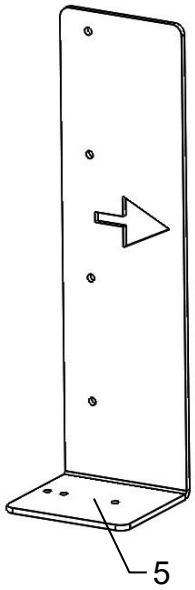

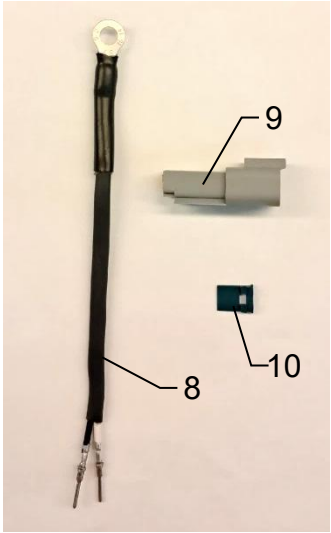

Ref	Description	Part #	Qty
1	Sensor Isolator	006-4643A	2
2	Isolator Bushing	006-4643B	4
3	Sensor Pad	006-4643C	2
4	DB Base Isolator	006-4643D	1
5	DB Drilling Template	001-4643E	1
6	1/4-20 x 1-1/2" 82deg Torx FHS	Hardware	4
7	1/4-20 x 1" 82deg Torx FHS	Hardware	2
8	DB Wire Leads (inc. parts 9, 10)	006-4643F	1
9	Plug Connector - DT04-2P	006-DT04-2P	1
10	Plug Wedge - W2P	006-W2P	1
NP	RTV Sealant	Hardware	1

Complete Assembly **030-4643DB**
(*Patent Pending)

Dual-Pad Moisture Sensor (030-4643DB)*

Installation

Locate the Dual-Pad Drilling Template (001-4643E) and align it against the center divider in the RH bale chute, approximately 8” from the front of the bale chamber or 1/2" behind the diverters bolted to the center divider at front of bale chamber. Arrow on the template points towards the front of the baler.
Clamp the template in place and use the holes in the template as a guide to drill the seven 3/16” holes through the center divider and the bottom tube. Remove template after drilling holes. Next, drill out the middle hole through the bottom tube to 1/2" diameter and also drill out the 4 holes through the center divider each to 1/2" diameter.

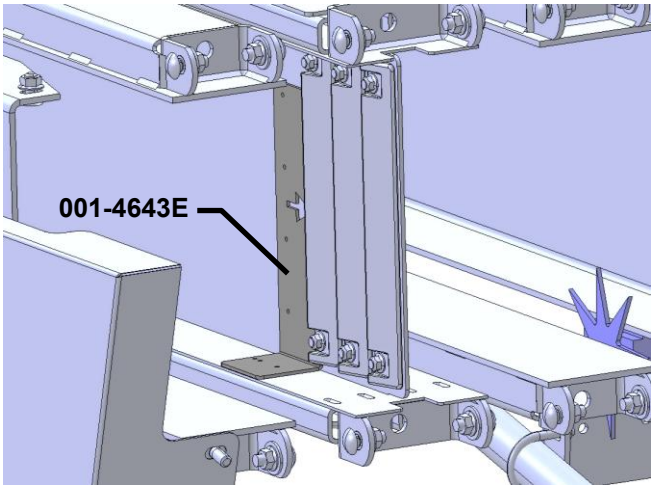

*Patent Pending

Insert isolator bushings (006-4643B) through the four 1/2” holes in the center divider.

Use the supplied two 1/4-20 thread cutter bolts to tap (top layer only) of the two remaining 3/16” holes of the tube at the bottom of the chamber.

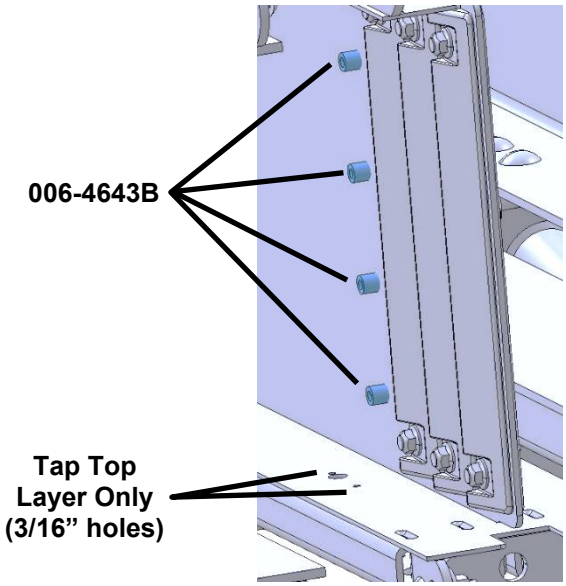

Wire Lead (006-4642F)

Insert the Wire Leads (006-4643F) through the 1/2” hole drilled through the bottom of the chamber.

Install the wire leads into the back of the supplied Plug Connector (006-DT04-2P):

White wire to location 1/A
Black wire to location 2/B.

Once wires have been fully inserted, install the locking wedge (006-W2P) into the opposite end of the connector.

Align the eye loop with the bottom isolator bushing, bending the wires so they lay flush to the bale chamber as shown.

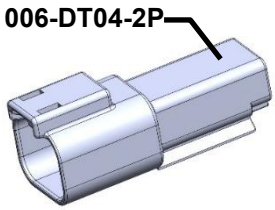

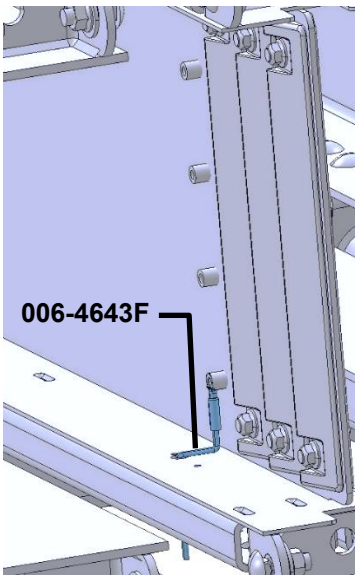

Dual-Pad Moisture Sensor Installation (continued)

Install the two Moisture Sensor Isolator Pads (006-4643A), on each side of the diverter wall. Align pads with the isolator bushings.

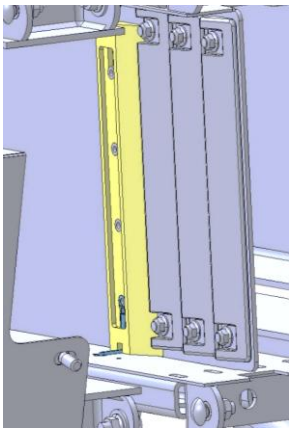

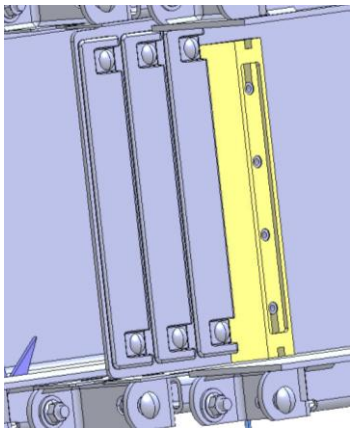

Install the two Moisture Sensor Pads (006-4643C) to each isolator pad using two of supplied 1/4-20 x1-1/2” FHS from each side. Screws secure through the sensor, isolators, and thread into the opposite sensor pad. Tighten the 4 screws by hand to no more than 10-12 ft-lb torque.

Apply RTV silicone sealant to the notch in the top and bottom of the sensor isolator in the LH chamber, to seal from moisture and dust.

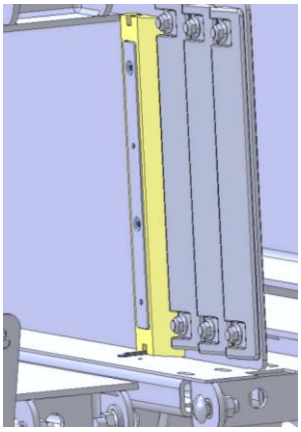

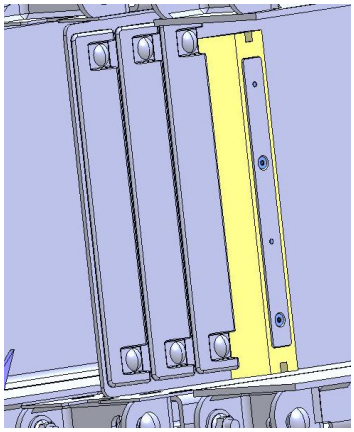

Install the Base Isolator (006-4643D) in the RH bale chamber against the sensor isolator. Secure to the bottom of the bale chamber using two supplied 1/4-20 x 1” FHS. Apply RTV silicone sealant to the notch in the top of the sensor isolator and notch at the side of the base isolator to seal from moisture and dust.

Upon completing installation of the star wheels and the dual pad sensor assembly, reinstall factory top center rails. Bolt the front end of each center rail in place using previous factory bolts, followed by reinstalling the rear bolt that connects each center rail to the rear tension cross member.

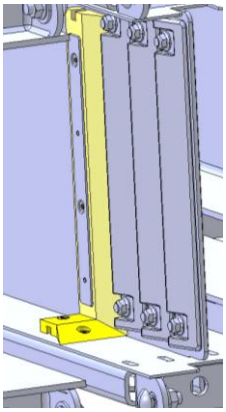

ISO Moisture Module – ACW7165580

HT202A2
For Single Chamber Balers

Mount the ISO Moisture Module on the right side of the baler to the sheet metal covering that protects the twine arm*. Mark and drill holes and secure with provided hardware.

ACW7165580 Control Module

*Alternate mounting placement for all 3-tie balers with 1/4 turn bale chute

Moisture Wire Harness Routing and Connections (006-7307AMS)
For Single Chamber Balers

The wire harness will connect to baler at the rear of the bale chamber. 3-tie balers connection point is on the lefthand side and 2-tie balers connection point is on the righthand side.

The 006-7307AMS wire harness connects to baler with two different plugs. Locate the baler's triangle-shaped Communication Plug and remove its Terminating Resistor Cap.
Connect the 006-7307AMS wire harness at this location and reattach the baler's terminating resistor plug to the Harvest Tec harness. Locate the baler's Power Plug (two-position plug) in the same baler location, remove its cap and attach the power plug of the Harvest Tec wire harness to it.

Route the 006-7307AMS harness along the bottom side of the chamber to the ISO Moisture Module. Connect harness to module using the 12-pin plug. Route one of the gray wires to each star wheel and connect with the Star Wheel Deutsch plugs. Ensure that all wires are clear of any pinch points or moving parts before securing to baler with cable ties.

ISO Moisture Module – ACW7165580

HT204A2

For Double Chamber Balers

Mount the ISO Moisture Module on the right side of the baler to the sheet metal covering that protects the twine arm.
Mark and drill holes and secure with provided hardware.

ACW7165580 Control Module

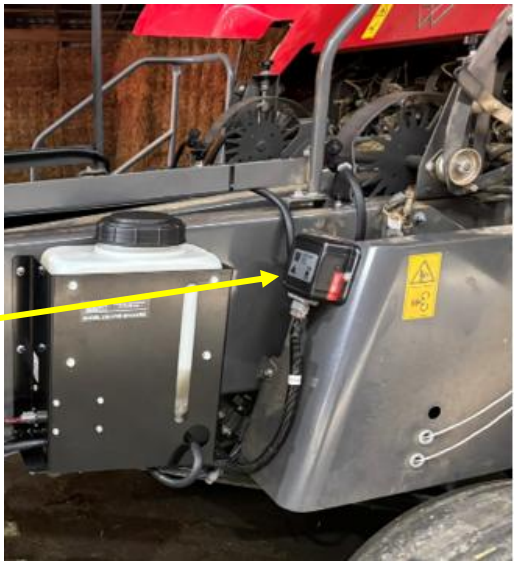

Moisture Wire Harness Routing and Connections
HT204A2 – Double Baler (006-7307AXMS)

Remove cover from the backside of the LH clearance light assembly to locate the baler wire harness plugs for power and communication. Remove factory terminating resistor from the baler communication plug and place it on the corresponding plug (CAN Term) on Moisture Wire Harness (006-7307AXMS). Connect plug (CAN-BALER) to the baler harness. Connect plug (PWR-BALER) to the baler power plug. Reinstall the backplate of the clearance light assembly.

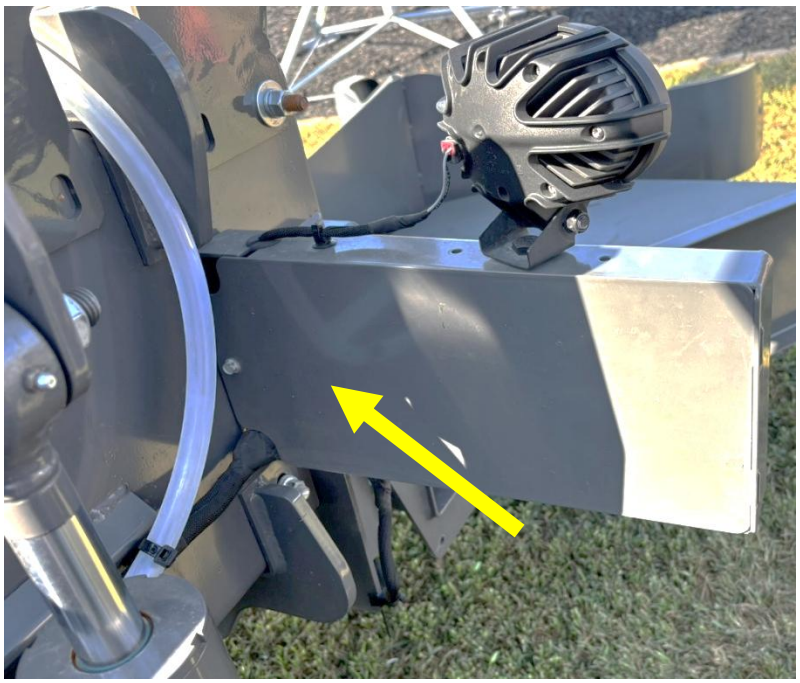

Route Moisture Wire Harness (006-7307AXMS) across the backside of the bale chamber, from the LH to RH corners, and then forward along the bottom side of the RH rail. Connect the main harness plug (IMM) to the Moisture Module (ACW7165580) which is mounted to the backside of the RH shield.

Connect moisture harness plug (MC1-RH) to the star wheel mounted to the bottom of the RH bale chamber. Connect plug (MC2-C) to the plug of the center moisture pad assembly sensor centered between the bale chambers. Plug (MC1-LH) continues route forward along the LH chamber and connects to the star wheel at the front LH side of the chamber. Secure moisture harness to baler away from moving parts and pinch points using p-clips and cable ties.

Display Setup & Operation

To select the HT202A2 moisture system on the baler run screen:

From the balers set up screen select the Moisture System Option (% with water droplet)

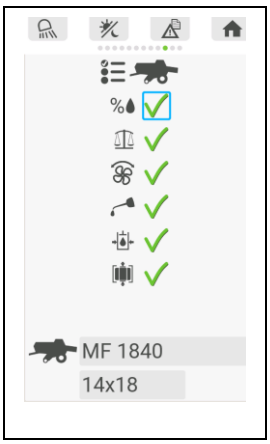

Once loaded you will be able to access the H20 Setting Screen:

- Real Time Moisture
- High Moisture Alarm
- Offset Adjustment
- Moisture Dye Marking Off

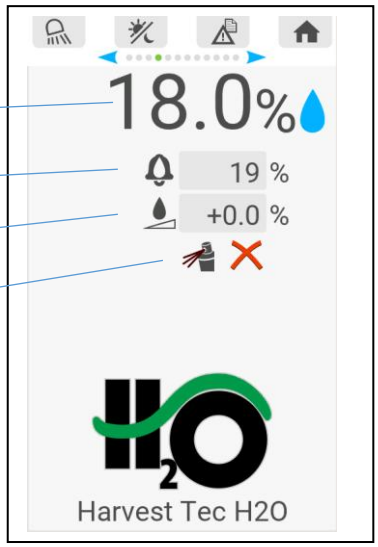

Real time moisture:
- This is the current star wheel moisture reading

High Moisture Alarm:
- This can be adjusted to give you notice when moisture is higher than your setpoint.
- The H20 screen Real Time Moisture number will turn Red when at or above the set point.
- When in the main baler work screen, the moisture will be boxed out in Orange when in moisture level reaches or exceeds the setpoint.

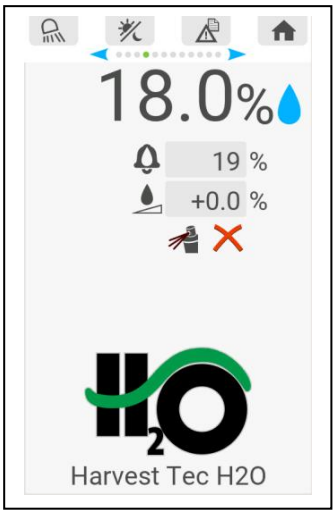

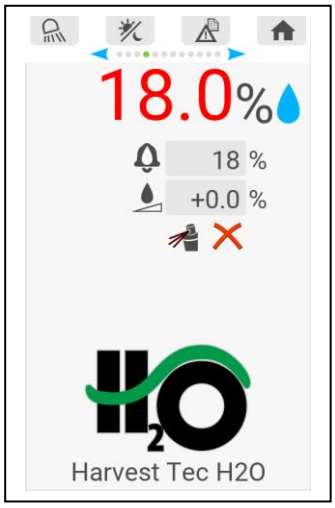

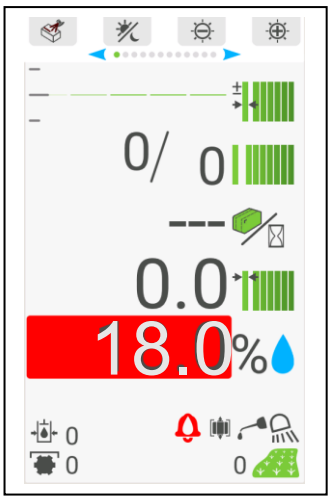

Display Setup & Operation (continued)

Offset Adjustment

- Allows you to adjust the entire moisture scale up or down to better line up to your personal hand probe or lab sample test. (Not recommended when applying preservative.)

Moisture Dye Marking (Optional)

- Allows you to spray the wet spots of the bale with a food grade color dye (Dye Refill part number 009-0800).

Warning Messages

The system can alert you of issues with your HT202A2.
Examples:

If messages similar as these examples appear, check the wire harness or ISO Moisture Module for loose connections or damage.

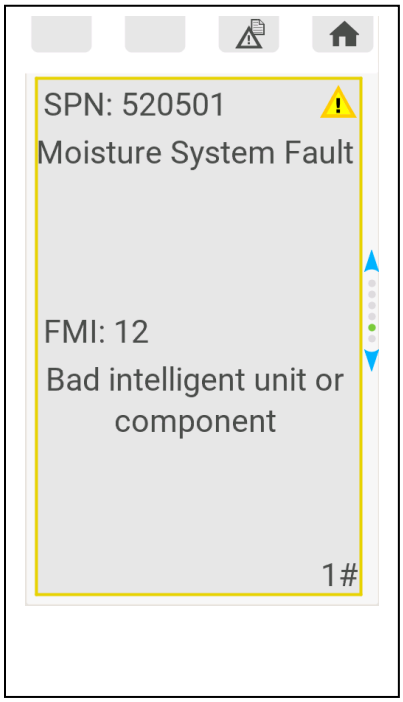

Trouble Shooting

Problem	Possible Cause	Solution
Moisture at 0.0% all the time	Moisture wire broke Star wheels unplugged	Fix or replace wire Plug star wheels into wire harness
Moisture at HI% all the time	Moisture wires shorted together Hay is extremely wet	Fix short in wire Wait until moisture comes down
Large swings in moisture	Damage to star wheels	Repair or replace star wheel

Optional HT238DM Dye Marker

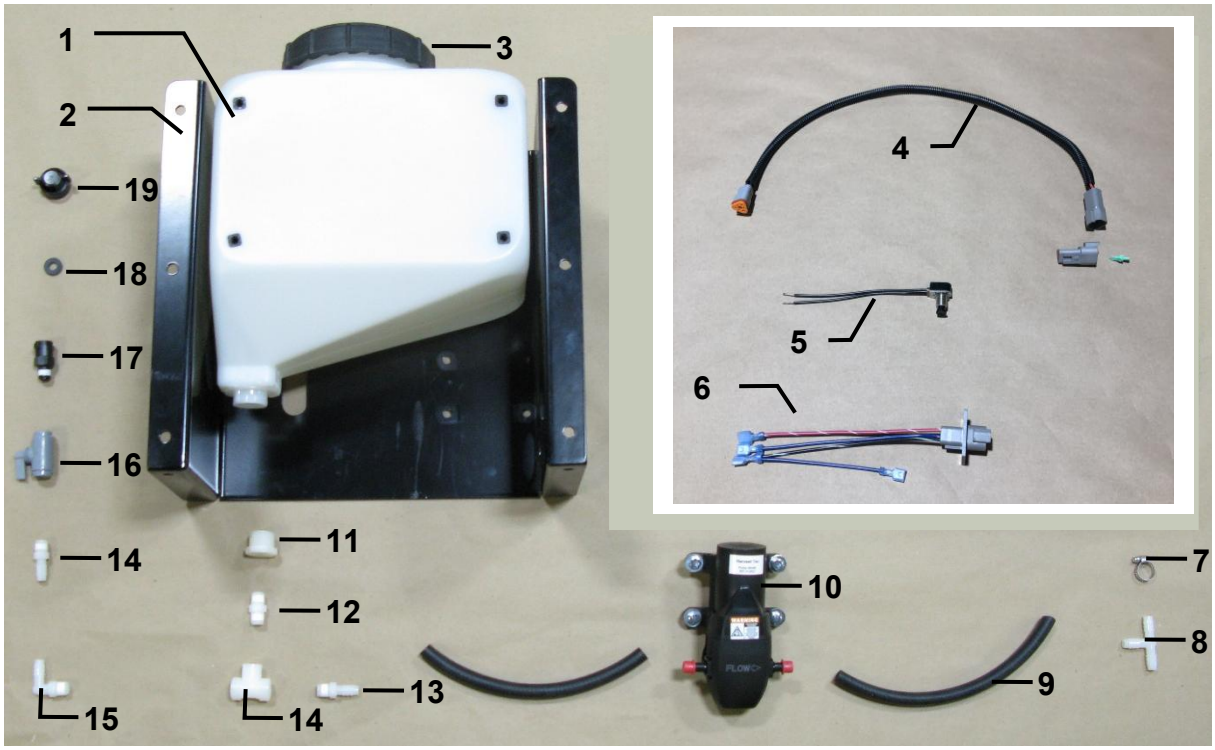

Ref	Description	Part#	Qty	Ref	Description	Part#	Qty
1	Tank	005-9019	1	12	1/4x1/4” Nipple	003-M1414	1
2	DSM Mounting Bracket	001-2500	1	13	1/4x3/8” Fitting	003-A1438	2
3	Tank Cap	005-9022C	1	14	1/4" FPT Tee	003-TT14	1
4	DSM Pump Harness 2’	006-765IDM4	1	15	1/4x3/8” Elbow	003-EL1438	1
5	Remote Push Switch	006-2850	1	16	SLV Bottle Valve	002-2216	1
6	DM Pump harness	006-765IDM2	1	17	Male Quick Connect	004-4710	1
7	Hose Clamp	002-9002	10	18	Rubber Gasket	004-1207W	2
8	3/8” Barbed Tee	003-T3838	1	19	Shut-Off Cap	004-1207F	1
9	3/8” EDPM Hose	002-9003AS	26’				
10	DSM Pump	007-4120LF	1				
11	3/4x1/4” Reducer	003-RB3414	1	NP	Tank Cap Gasket	005-9022CG	1

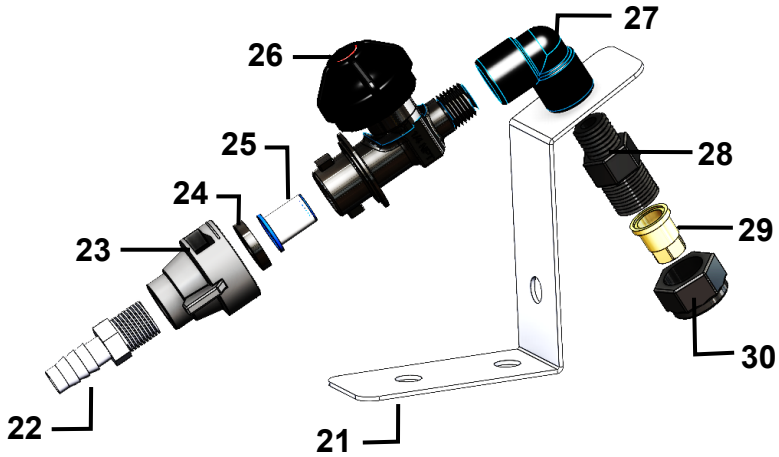

Ref	Description	Part#	Qty
21	Nozzle Holder	001-4216	2
22	Straight Fitting	003-A1438	2
23	Quick Connect	004-1207H	2
24	Rubber Gasket	004-1207W	2
25	Tip Screen	004-1203-100	2
26	Check Valve	004-1207V	2
27	Street Elbow	003-SE14F	2
28	Nozzle Body	004-4722	2
29	Brass Tip	004-TX-5	2
30	Nozzle Cap	004-4723	2

Installation of Mounting Bracket, Tank, and Wire Harness
For HT202A2 and HT204A2 Systems

Locate the tank and mounting bracket assembly.

a. The tank bracket can be mounted to a flat spot the side or top of the bale chamber. Note: Place bracket close enough to reach the plug for the dye marker on main wire harness (006-7307AMS or 006-7307AXMS)
b. Mark the mounting holes and drill out using 3/8” bit. If mounting to the bale chamber be sure to use button head bolt with the heads on the inside of the chamber.
c. Fasten the mounting bracket to the baler using the 5/16” hardware provided in the kit.
d. The 4-pin connector on the 2 ft extension harness (006-765IDM4) will need to be switched to the triangle 3-pin plug connector included with this harness.
e. Attach 3-pin triangle plug on main moisture harness (orange, black and blue wires) to it to the Dye Marker.
f. Remote Push Switch (006-2850) comes installed near the dye marker pump and is used for priming, testing and purging of the dye marker pump.
g. Extension Harness 006-765IDM4 from the 238DM Dye Marker is not used with the HT202A2 or HT204A2 Moisture Only systems.

HT204A2 – Tank Placement

Spray Nozzle Placement

The spray tips come pre-assembled and are secured to the baler using Nozzle Holder Brackets (001-4216). Bracket angles may need to be adjusted for best spray angle

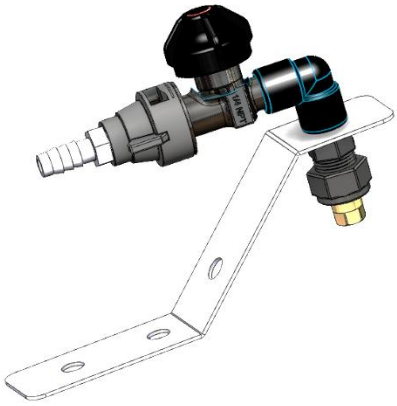

For Single Chamber Balers (HT202A2 Kits)

Mount nozzle assemblies in line with the star wheels so that the system will mark the wet spots of the bale. For best spray pattern, nozzles will need to be placed approximately 1” above the bale section to be marked.

Place the nozzle holders with the tips centered over the opening between the top bale chamber rails. Secure to bale chamber using supplied 1/4” hardware.

For Double Bale Chamber Balers (HT204A2 Kits)

Nozzle Assemblies (**A**) are mounted on the top of the bale chambers, above the Star Wheel (**B**), and in line with the Dual-Pad Moisture Sensor so that the system will mark the wet spots of the bales. For best spray pattern, nozzles will need to be placed approximately 1” above the bale section to be marked.

Place one nozzle holder over each bale chamber directly behind the metering wheel guards, similar as shown (**C**). Secure to bale chamber using supplied 1/4” hardware.

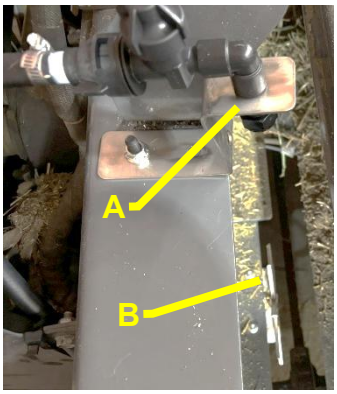

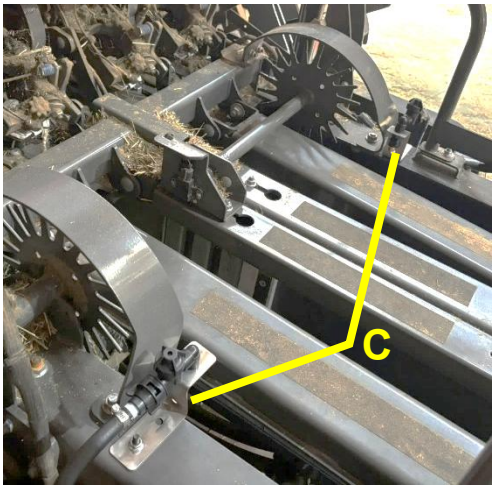

Dye Marker Hose Routing

Once nozzles are fastened to bale chamber, route the black 3/8” hose to each tip. Fasten the hose to baler securely using cable ties taking care to avoid pinching or crimping the hose.

Note for Double Balers: Route hose along the lower handrail support and across the rear tension rail. Allow ample slack in hose for chamber height adjustment.

*****Route and secure hose away from moving baler parts*****

HT204A2 – Hose Routing

Dye Tank Drain Line

Attach hose to the barb fitting located on the tee fitting opposite supply line at bottom of dye tank. Secure with hose clamp and route a length of hose and attach shut off valve assembly (barb fitting, shutoff valve, quick connect and cap). Drain line length and placement is left to the discretion of the installer.

Control Setup for Dye Marking

Once the dye marking control is installed and connected, select the function 2 button in the balers main work screen. Select the moisture dye marking icon shown in the blue box below. Once selected, the H20 Page will show that the dye marking icon now has a green check mark next to it. Set the Moisture % you want the dye to start spraying at by adjusting the value in the box just below the green check mark for the dye marker.

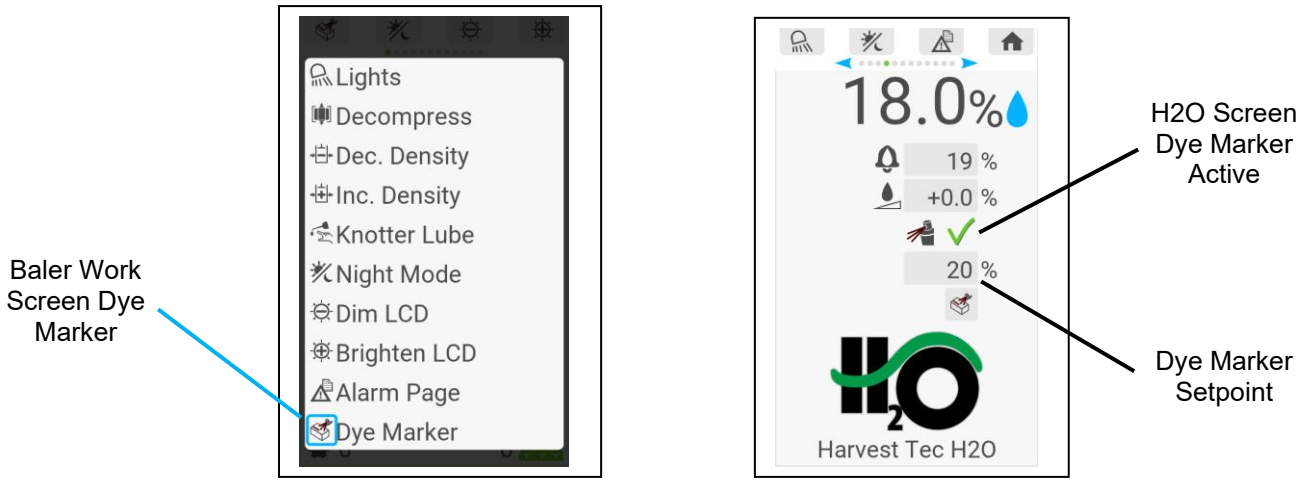

Note: The dye marker will continuously spray when it is above the moisture threshold not just once per bale. If you are knowingly and/or consistently baling above the moisture threshold, it is recommended to turn the dye marker off, raise your threshold setting, or stop baling until the moisture level goes down.

Filling Tank & First Time and Annual Startup - HT238DM

1. **Filling the Tank**

   Remove the tank lid from the 3-gallon tank. Make sure the tank is clean and completely empty. Mix the Dye (009-0800) with warm water inside the Dye bottle. Replace jar cap and shake bottle vigorously to dissolve the dye powder into a concentrated liquid. Pour the liquified dye concentrate into the 3-gallon tank and fill the tank with water.

2. **First Time and Annual Startup**

   Once the tank has been filled, the plumbing lines will need to be primed. With the system activated, press the remote push switch until all the air is flushed out of the lines and a steady stream of liquid sprays from each of the spray tips.

   ******NOTE: The system needs to be primed each time the system <u>runs out</u> of dye******

   The spray option is activated by turning on the feature in the H20 settings screen. When selected, a green check mark will appear next to the sprayer icon.

   The High Moisture Threshold setpoint is used to activate the Dye Marker while baling. Adjust to desired moisture level to have sections at or above the setpoint sprayed by the dye marker for identification while baling.

HT238DM Plumbing Diagram

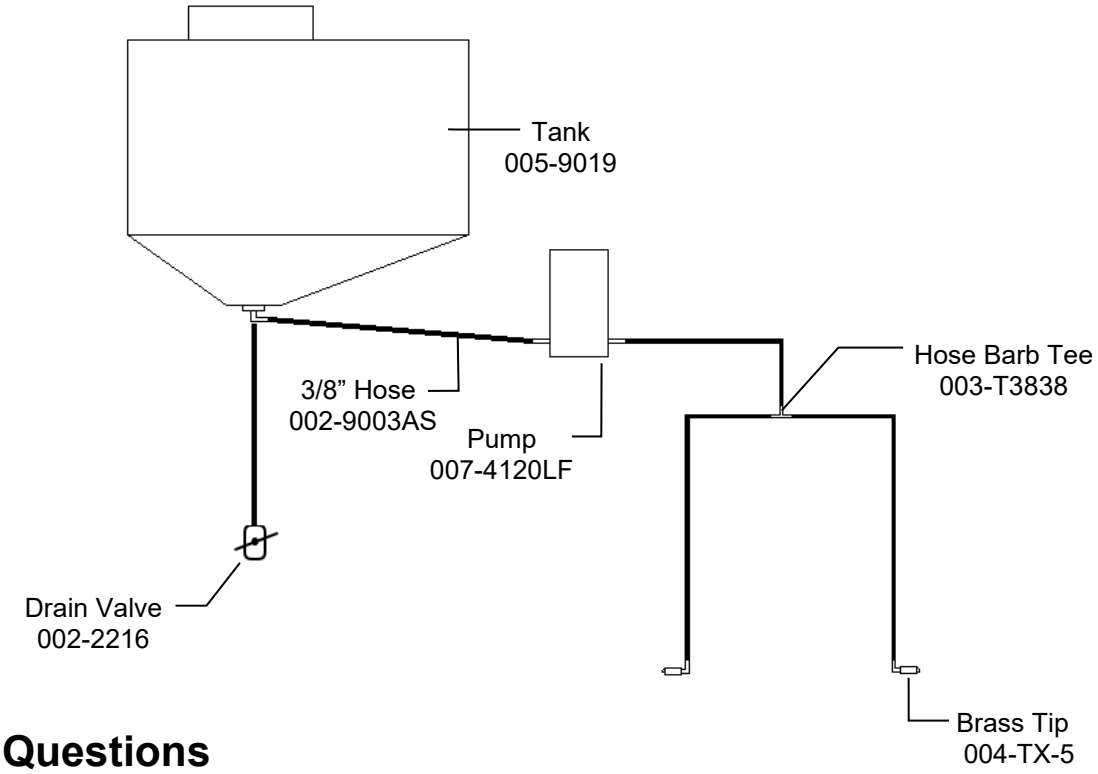

Common Questions

1. **Is the marking dye safe for livestock consumption?**
   The DSM uses red-colored, food-grade dye and is safe for all livestock. (Part # 009-0800)

2. **How do I bleed the air out of the lines properly?**
   Remove the tips from the check valves that they're threaded into and press the prime button on the dye marker until the air is pushed out of the lines.

Troubleshooting

Problem	Possible Cause	Solution
The tips are not spraying Dye	1. The system is out of dye. 2. There is air in the lines, preventing a steady mist coming from the tips. 3. Damaged/pinched hose. 4. Tip is plugged. 5. Set point is set too high	1. Check the tank for solution. If the tank is empty, refill and bleed air from lines. 2. Remove the tips from the check valves and using the priming button bleed the air out of the lines. 3. Inspect all the hose making sure the lines are damaged or pinched. 4. Removed the tip from the bushing and inspect, clean is necessary. 5. Lower the set point level at which the user would like to have the bales marked at.

Maintenance

For **winter** storage, flush and drain all the liquid out of the lines, tank and pump. Use of antifreeze is not recommended. **DO NOT PRESSURE WASH ISO MODULE.**

Pin Outs

ISO Moisture Module (IMM) Plug:
006-7307AMS and 006-7307AXMA Harnesses

Pin 1	Red	Module Power
Pin 2	Plugged	N/A
Pin 3	Plugged	N/A
Pin 4	Red	Left Moisture Sensor
Pin 5	Red	Right Moisture Sensor
Pin 6	Plugged	N/A
Pin 7	Yellow	CAN +
Pin 8	Green	CAN -
Pin 9	Orange	Dye Marker 12V +
Pin 10	Black	Dye Marker 12V -
Pin 11	Blue	Dye Marker Prime
Pin 12	Black	Ground

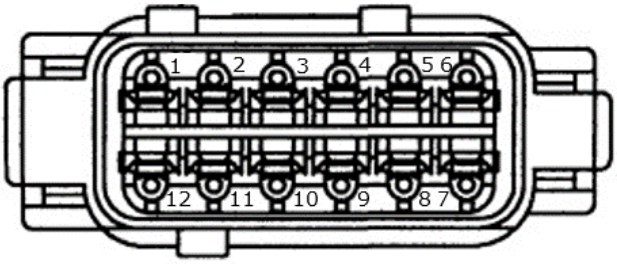

Star Wheel/ Moisture Sensor Plugs:
006-7307AMS and 006-7307AXMA Harnesses

Pin 1	Red	Signal
Pin 2	Black	Signal

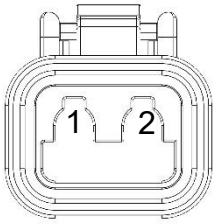

Baler Power Connector:
7307AMS and 006-7307AXMA Harnesses

Pin 1	Red	12V +
Pin 2	Black	Ground

Communication Plug:
7307AMS and 006-7307AXMA Harnesses

Pin A	Yellow	CAN +
Pin B	Green	CAN –
Pin C	N/A	

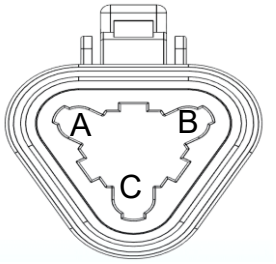

Dye Marker Module Plug:
7307AMS and 006-7307AXMA Harnesses

Pin A	Orange	Dye Marker 12V +
Pin B	Black	Dye Marker 12V -
Pin C	Blue	Dye Marker Prime

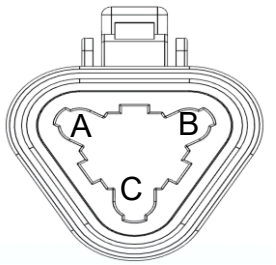

Harvest Tec LLC. Warranty and Liability Agreement

Harvest Tec, LLC. will repair or replace components that are found to be defective within 12 months from the date of manufacture. Under no circumstances does this warranty cover any components which in the opinion of Harvest Tec, LLC. have been subjected to negligent use, misuse, alteration, accident, or if repairs have been made with parts other than those manufactured and obtainable from Harvest Tec, LLC.

Our obligation under this warranty is limited to repairing or replacing free of charge to the original purchaser any part that in our judgment shows evidence of defective or improper workmanship, provided the part is returned to Harvest Tec, LLC. within 30 days of the failure. If it is determined that a non-Harvest Tec manufactured product has been used inside the Harvest Tec applicator system where the failure occurred, then Harvest Tec reserves the right to deny the warranty request at their discretion. Parts must be returned through the selling dealer and distributor, transportation charges prepaid.

This warranty shall not be interpreted to render Harvest Tec, LLC. liable for injury or damages of any kind, direct, consequential, or contingent, to persons or property. Furthermore, this warranty does not extend to loss of crop, losses caused by delays or any expense prospective profits or for any other reason. Harvest Tec, LLC. shall not be liable for any recovery greater in amount than the cost or repair of defects in workmanship.

There are no warranties, either expressed or implied, of merchantability or fitness for particular purpose intended or fitness for any other reason. This warranty cannot guarantee that existing conditions beyond the control of Harvest Tec, LLC. will not affect our ability to obtain materials or manufacture necessary replacement parts.

Harvest Tec, LLC. reserves the right to make design changes, improve design, or change specifications, at any time without any contingent obligation to purchasers of machines and parts previously sold.

Revised 1/24

HARVEST TEC, LLC.
P.O. BOX 63
2821 HARVEY STREET
HUDSON, WI 54016 USA
PHONE: 715-386-9100
FAX: 715-381-1792
Email: info@harvesttec.com