Installation and Operation Manual

Model HT200A2
Precision Moisture System
& Optional HT238DM Dye Sprayer

HarvestTec®

EST. 1976

HT200A2 & HT238DM -26
9/26

Harvest Tec HT200A2 & HT238DM Table of Contents

	Page
Introduction & Tools Needed	**2**
Installation	**3-8**
Moisture Sensor Mounting - Star Wheels	3
ISO Moisture Module	3
Star Wheel Sensor Kit Breakdown	4
Setup & Operation	**5-7**
Optional HT238DM Dye Marker	**8-11**
Installation	9-10
Tank Filling - First Time & Annual Startup	10
Common Questions	11
Troubleshooting	11
Maintenance	11
Wiring Diagram	**12**
Pin Outs	**13**
Warranty	**14**

Introduction

Congratulations on purchasing a Harvest Tec HT200A Moisture System and/or the optional HT238DM Dye Sprayer Marking System. When attached to any AGCO MF2233/2234/2234XD/2244 baler, this kit will allow you to read instantaneous moisture. The optional HT238DM will visibly mark the wet areas on your bales that meet or exceed the indicated threshold level.

The HT200A2 includes: Star Wheel Moisture Sensors, Twine Diverters, Wire Harness and ISO Moisture Module. The optional HT238DM includes: Dye Tank, Pump, Plumbing, Mounting Hardware and Harness. There are parts breakdowns in the manual to reference if replacement parts are needed. All replacement parts and dye refills can be ordered through your local equipment dealer or directly through Harvest Tec.

Tools Needed

Standard wrench set	Hammer	Straight edge
Standard socket set	Tape measure	Metal drilling and cutting tools
Center punch	Marker	

Moisture Sensor Mounting - HT200A2 Kits

Star Wheel Moisture Sensor Kit (030-4642NG)

The star wheels are to be mounted on top of the baler, just behind the knotters and under the walkway on both sides (Figure 1). The notch and holes for the star wheel are precut. If the star wheels are cutting the twine the sensors and notch must be moved out an additional 1/2" (13mm).

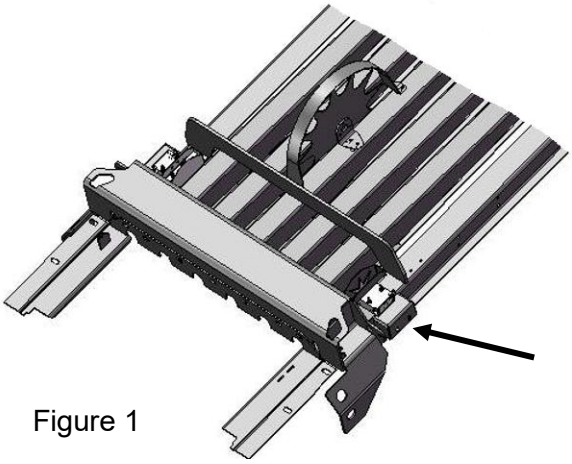

Figure 1

Each Star Wheel mounts using 5/16” x 3-1/4” BHCS (x2 each side), placing the button heads inside the bale chamber. Blocks are dropped down on the bolts with spacer plate (001-6707ES) between block and baler then secured in place with the star wheel twine guards (001-4645H and 001-4644H). Twine guard with the two extra holes (001-4644H) will be placed on the right side of the baler.

Secure with 5/16” lock washers and nuts. Make sure blocks run parallel to the side channel of baler. Hand tighten with wrench or ratchet - not exceed 13 ft-lb torque. **DO NOT USE AN IMPACT TO TIGHTEN.** Over torquing star wheel mounting hardware can cause pre-mature wear of the star wheel blocks.

Star wheel harness connection is found on baler harness shown in Figure 2.

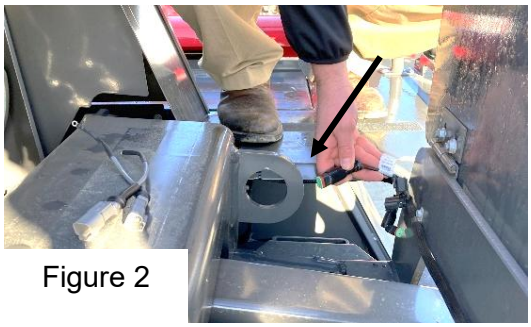

Figure 2

ISO Moisture Module – ACW7165580

The ISO moisture module is installed at the front right side of the baler frame under the side door. Insert the supplied rivet nuts into baler frame knockouts and tighten down so rivet nut expands into baler frame (Fig. 3). Install ISO module so holes match with rivet nuts (HDR-KLIK-RIV-1/4). Secure using supplied hardware. Connect ISO module to baler harness plug located next to baler ECU box (Figure 4).

ACW7165580
Control Module

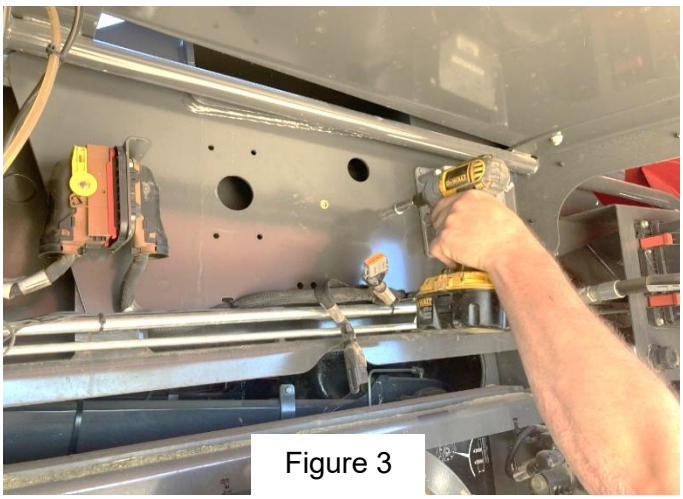

Figure 3

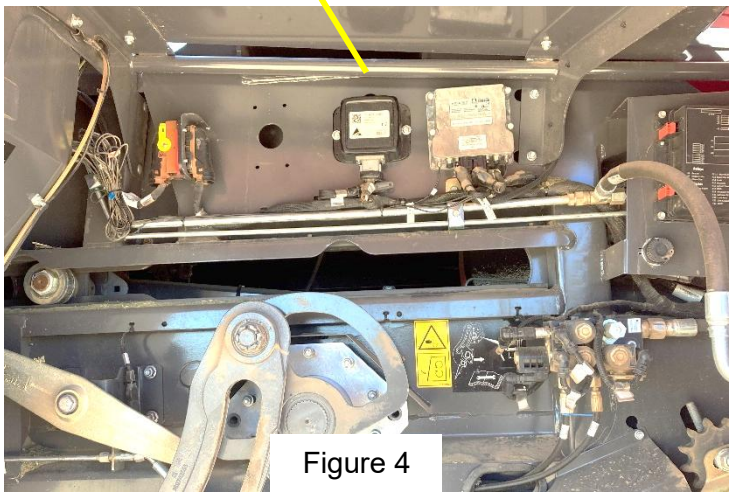

Figure 4

Star Wheel Sensor Kit (030-4642NG)
Factory Moisture Systems – Reinforced Yellow Block 2026

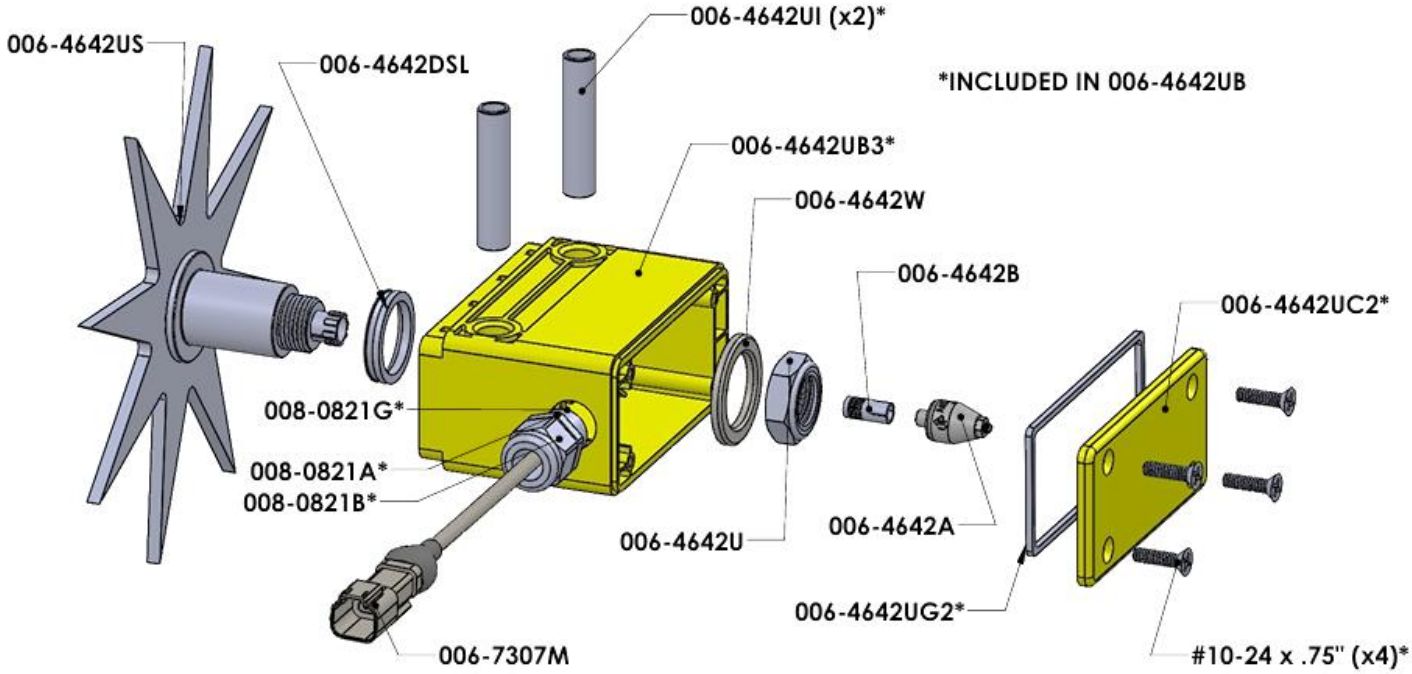

Description	Part#	Qty
Star Wheel (includes swivel insert)	006-4642US	1
Dust Seal Gasket	006-4642UG	1
Star Wheel Block Only	006-4642UB3	1
Star Wheel Block End Cap	006-4642UEC	1
Block Inserts	006-4642UI	2
Wire Compression Grommet	008-0821A	1
Grommet Locking Nut (internal)	008-0821B	1
Washer for Wire Grommet	008-0821G	1
Bearing Washer	006-4642W	1
Star Wheel Nut	006-4642U	1
Swivel Insert	006-4642B	1
Electric Swivel	006-4642A	1
Star Wheel Block Gasket	006-4642UG2	1
Star Wheel Block Cover	006-4542UC2	1
Moisture Harness Plug (2 Pin)	006-7307M	1

Description	Part#
Parts Not Pictured:	
Star Wheel Spacer Plate	001-6707ES
Star Wheel Mounting Hardware (5/16" x 3-1/4" Allen Head Screws, nuts, locks and washers)	
Twine Guard -Left	001-4645H
Twine Guard -Right	001-4644H
Star Wheel Drilling Template (HT204A2 Only)	001-4642T
Replacement Star Wheel Block*	001-4642UB
Complete NG Star Wheel Assembly	**030-4642U**
Complete NG Sensor Kit (Inc. 2 NG star wheels, spacer plates, both twine guards & hardware)	**030-4642NG**

System Setup & Operation

How to select the HT200A2 moisture system on the baler run screen:

Select the button on the baler main run screen that has 4 vertical lines.

Then select the settings button that has two gears on it.

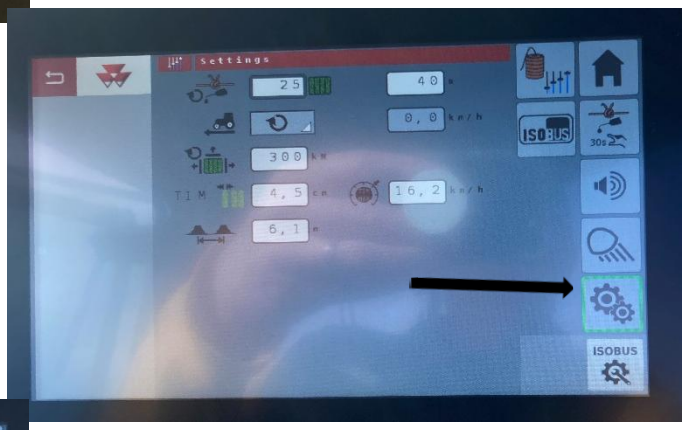

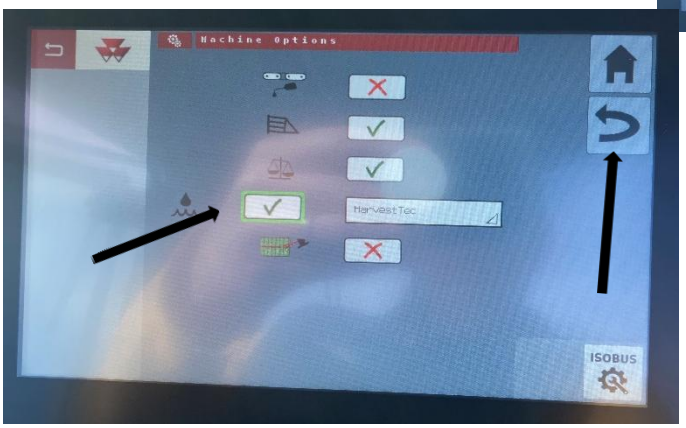

To turn on the moisture system, choose the check mark next to the moisture symbol and select Harvest Tec. Then return to the baler run screen.

If a HT238DM is installed, select a check mark next to the marked bale icon. Then return to baler run screen.

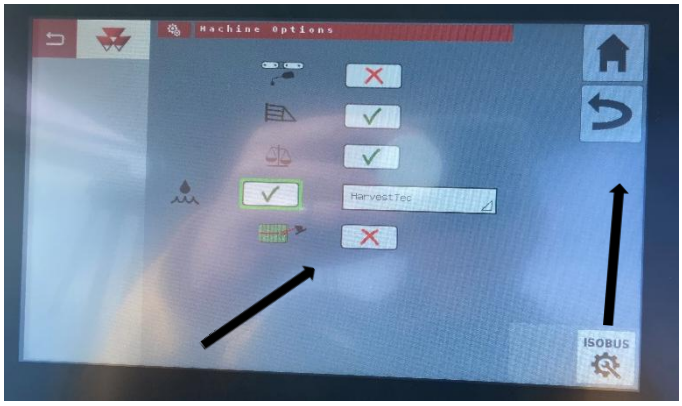

System Setup & Operation (Continued)

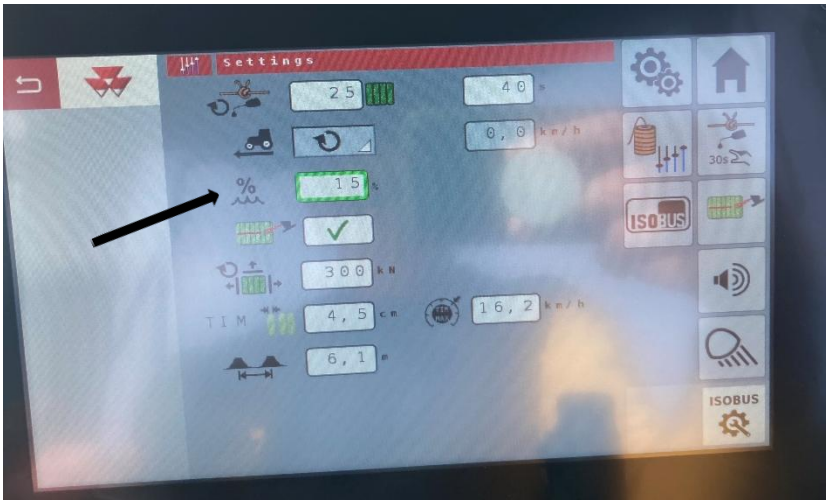

Setting up the moisture alarm:
If equipped with the HT238DM the bale is marked upon a high moisture reading, allowing the operator to easily identify those bales that are above their own pre-determined moisture threshold. A food-grade dye mixes with water and applies up to 60 bales and is only triggered 1 time per high moisture occurrence per bale.

In the baler run screen, the operator can customize any of the 4 containers and set to display moisture.

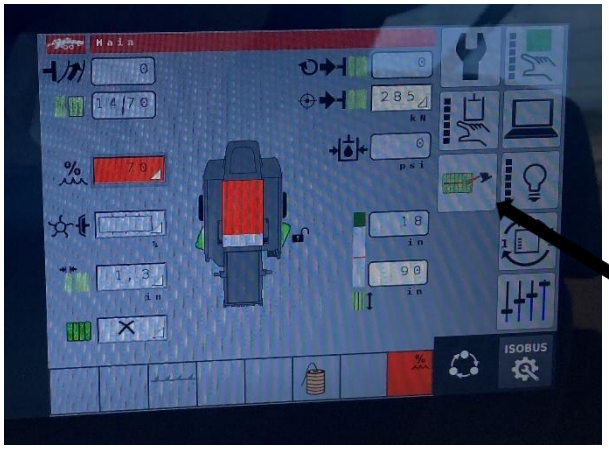

If equipped with HT238DM and turned ON, the operator can manually trigger the dye marker to mark bale in chamber from baler Run screen using this icon.

Average Bale Moisture Selection

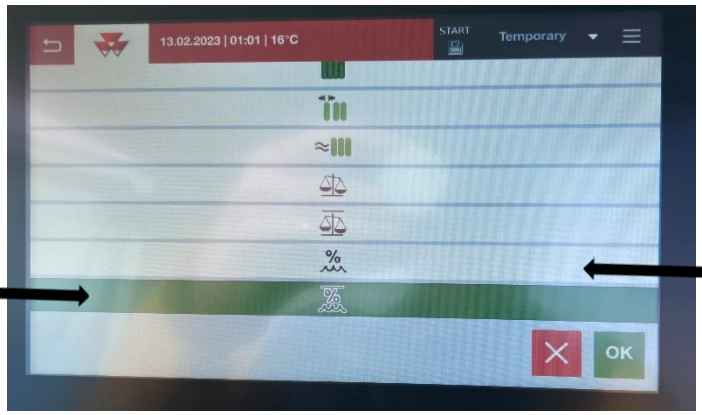

Instantaneous Moisture Selection

System Setup & Operation (Continued)

On the baler run screen, the moisture alarm container will turn red, and the alarm will go off when the bale moisture exceeds the operator's pre-set moisture threshold.

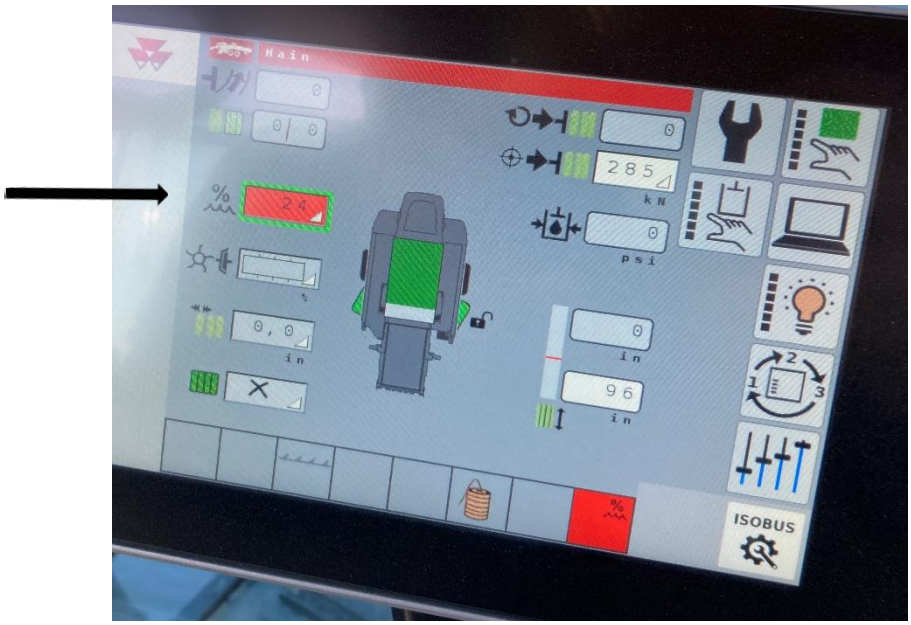

The Error message shown below will come up on the baler run screen when moisture option is turned on but there is no ISO module detected.

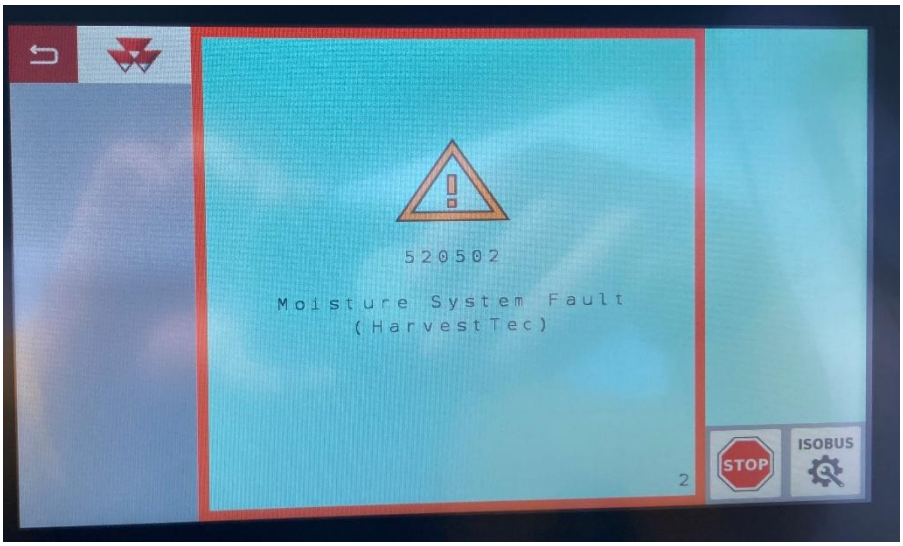

Optional HT238DM Dye Marker

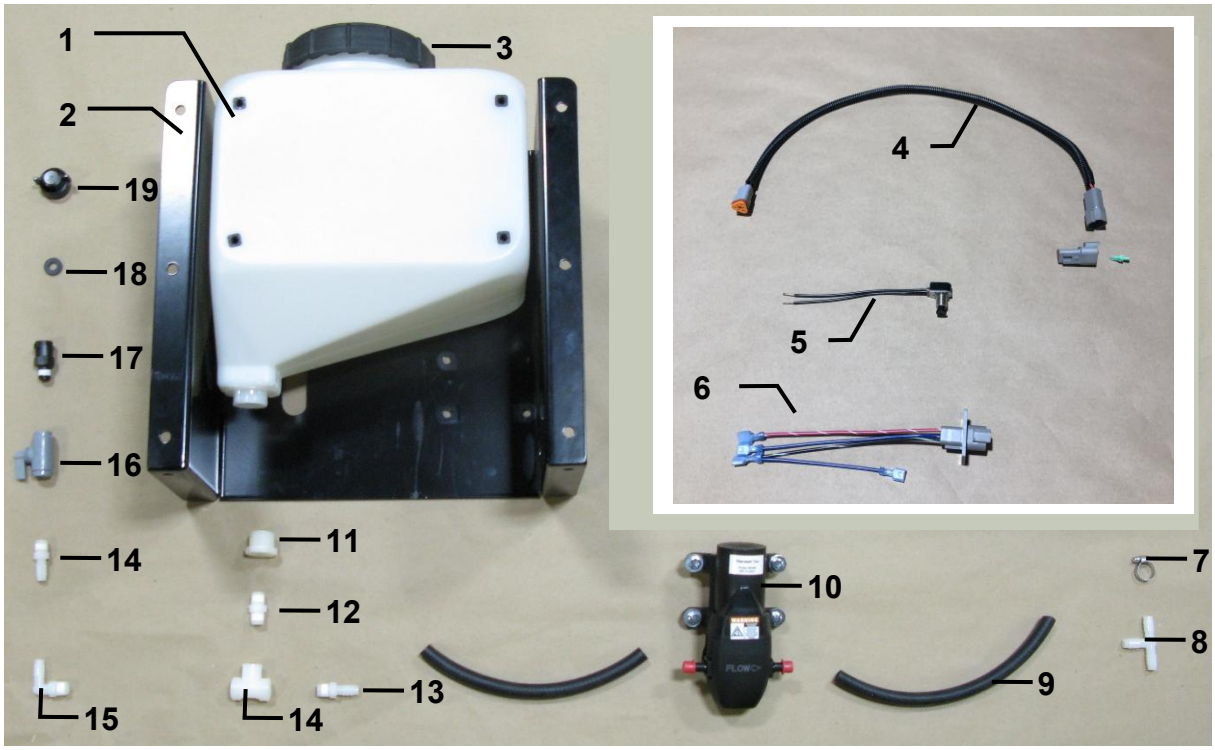

Ref	Description	Part#	Qty	Ref	Description	Part#	Qty
1	Tank	005-9019	1	12	1/4x1/4” Nipple	003-M1414	1
2	DSM Mounting Bracket	001-2500	1	13	1/4x3/8” Fitting	003-A1438	2
3	Tank Cap	005-9022C	1	14	1/4" FPT Tee	003-TT14	1
4	DSM Pump Harness 2’	006-765IDM4	1	15	1/4x3/8” Elbow	003-EL1438	1
5	Remote Push Switch	006-2850	1	16	SLV Bottle Valve	002-2216	1
6	DM Pump harness	006-765IDM2	1	17	Male Quick Connect	004-4710	1
7	Hose Clamp	002-9002	10	18	Rubber Gasket	004-1207W	2
8	3/8” Barbed Tee	003-T3838	1	19	Shut-Off Cap	004-1207F	1
9	3/8” EDPM Hose	002-9003AS	26’				
10	DSM Pump	007-4120LF	1				
11	3/4x1/4” Reducer	003-RB3414	1	NP	Tank Cap Gasket	005-9022CG	1

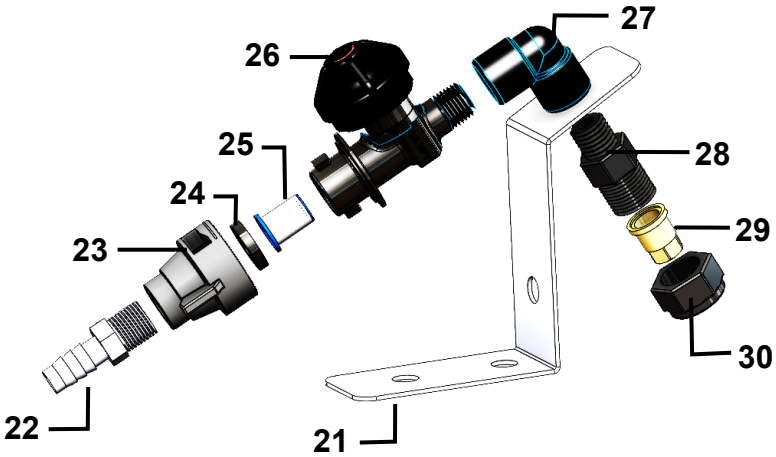

Ref	Description	Part#	Qty
21	Nozzle Holder	001-4216	2
22	Straight Fitting	003-A1438	2
23	Quick Connect	004-1207H	2
24	Rubber Gasket	004-1207W	2
25	Tip Screen	004-1203-100	2
26	Check Valve	004-1207V	2
27	Street Elbow	003-SE14F	2
28	Nozzle Body	004-4722	2
29	Brass Tip	004-TX-5	2
30	Nozzle Cap	004-4723	2

Mounting Bracket, Tank and Wire Harness

Installation - For HT200A2

Locate the tank and mounting bracket assembly.

a. Mark the mounting holes and drill out using 3/8” bit. Recommended mounting locations pictured (Fig. 5 and 6). Alternatively dye marker tank can be mounted near ground level for ease of filling.
b. Fasten the mounting bracket to the baler using the 5/16” hardware provided in the kit.

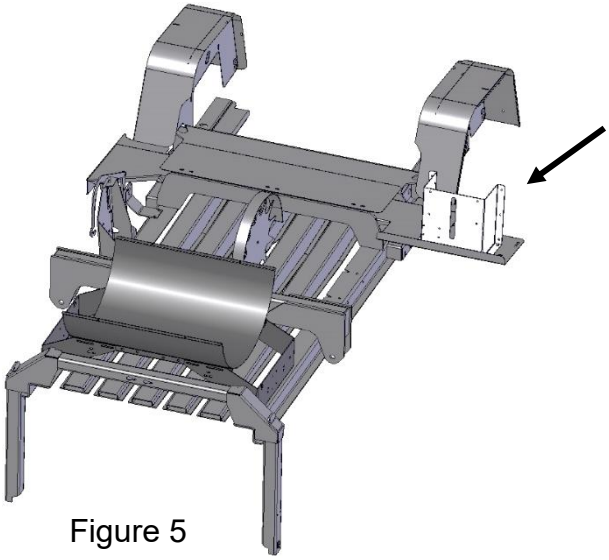

Figure 5

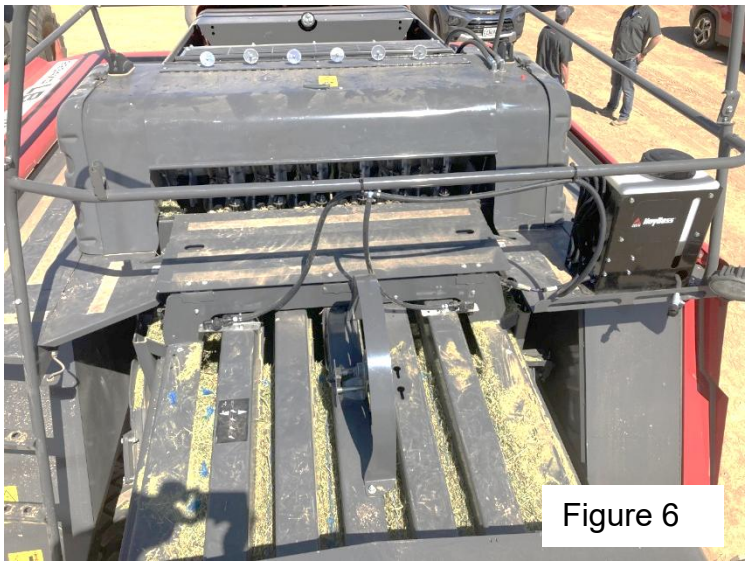

Figure 6

Installation of Plumbing

Spray Nozzle Placement – HT200A2

The spray tips come pre-assembled and are secured to the baler using Nozzle Holder Brackets (001-4216). Bracket angles may need to be adjusted for best spray angle

Install the tip and nozzle holder assemblies in the suggested locations pictured below, using supplied 1/4” hardware. Make sure that the tip assemblies (**A**) are mounted in line with the star wheels (**B**) so that the system is marking the wet spots of the bale. To get the best spray pattern focused directly on the wet spot of the bale the nozzles will need to be approximately 1” above the bale that is being marked. A small notch may need to be cut to increase surface area of the bale being marked if mounting on side of chamber.

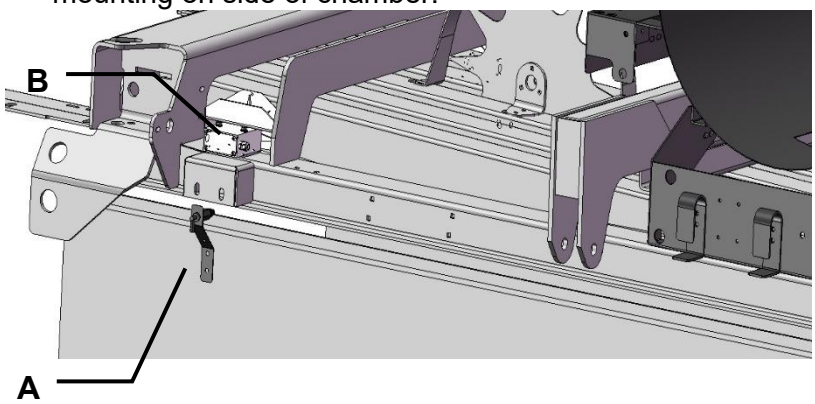

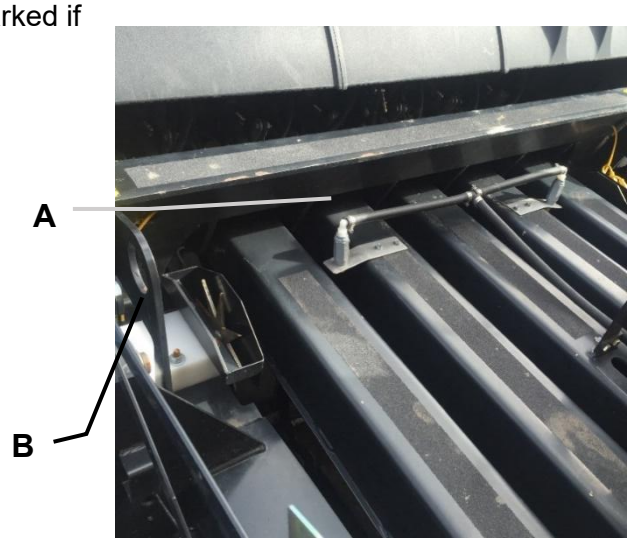

Once the nozzle holders are fastened to the balers, route the 3/8” hose to the tips. Make sure to fasten the hose securely but avoid pinching the lines. *(Plumbing Diagram pictured below)*

********Keep from routing the hose in the way of moving parts on the baler********

Attach drain hose top hose barb fitting at bottom of tank. Run hose to a secure point and attach valve assembly.

HT238DM Plumbing Diagram

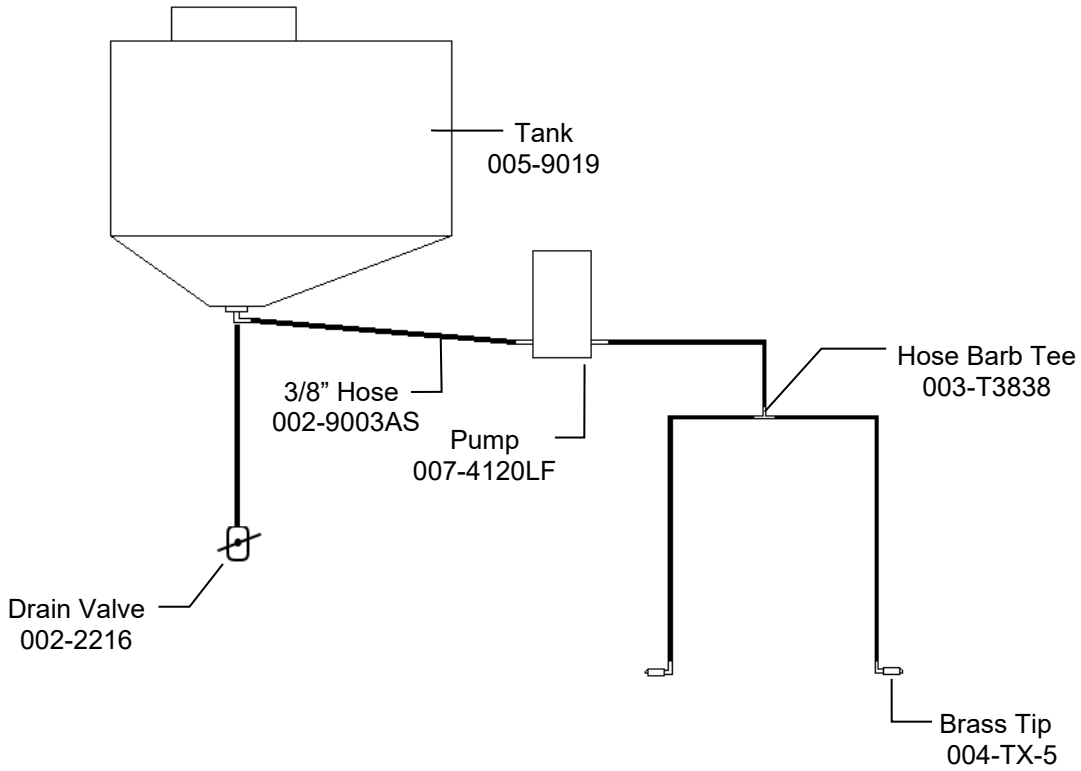

Harness Connection

Connect the Dye Marker Extension Harness (006-765IDM4) to the pump on the dye marker tank. The other end of extension harness connects to the baler harness Dye Marker (DM) plug on the right-hand of the bale chute next to the star wheel connection plug.

Tank Filling - First Time & Annual Startup

Filling the Tank - Remove the tank lid from the 3 gallon tank. Make sure the tank is clean and completely empty. Mix the Dye (009-0800) with warm water inside the Dye bottle. Make sure that the bottle is shaken vigorously so that the dye completely dissolves. Once the solution is mixed, add it to the 3 gallon tank and fill the tank with water.

First Time and Annual Startup

1. Once the tank has been filled the plumbing lines will need to be primed. With the system turned on and in a paused mode, hold the priming button until all the air is flushed out of the lines and there is a steady stream of liquid coming from each of the tips.

******NOTE: The system needs to be primed every time the system has run <u>out</u> of dye******

2. The spray option can be activated by turning on the feature in the baler settings; once selected there will be a green check mark next to the marked bale icon.
3. You can adjust the moisture content level at which you would like the system to mark the ‘Wet Flakes’ in the bale being made by simply adjusting the high moisture threshold you want to identify on the General Settings and Machine Options Page

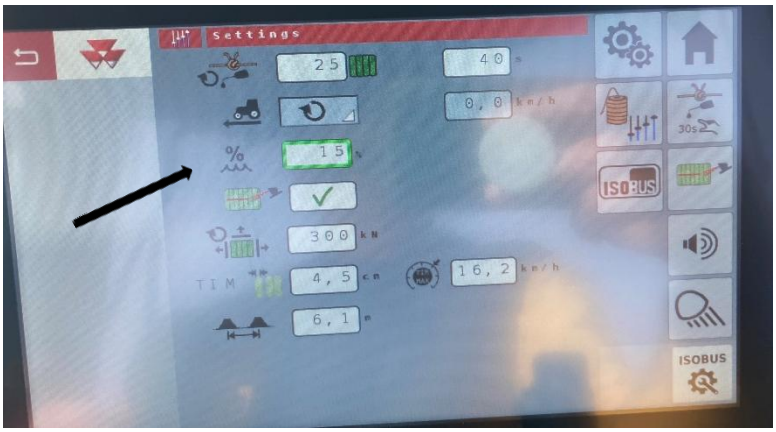

Common Questions - HT238DM

1. **Is the marking dye safe for livestock consumption?**
   The DSM uses red-colored, food-grade dye and is safe for all livestock.

2. **How do I bleed the air out of the lines properly?**
   Remove the tips from the check valves that they're threaded into and press the prime button on the dye marker until the air is pushed out of the lines.

Troubleshooting

Problem	Possible Cause	Solution
The tips are not spraying Dye	1. The system is out of dye. 2. There is air in the lines, preventing a steady mist coming from the tips. 3. Damaged/pinched hose. 4. Tip is plugged. 5. Set point is set too high	1. Check the tank for solution. If the tank is empty, refill and bleed air from lines. 2. Remove the tips from the check valves and using the priming button bleed the air out of the lines. 3. Inspect all the hose making sure the lines are damaged or pinched. 4. Removed the tip from the bushing and inspect, clean is necessary. 5. Lower the set point level at which the user would like to have the bales marked at.

Maintenance

For **winter** storage, flush and drain all the liquid out of the lines, tank and pump. Use of antifreeze is not recommended. **DO NOT PRESSURE WASH ISO MODULE.**

<u>Wiring Diagram</u> - HT200A2 & HT238DM

1. Connect the ISO moisture module (ACW7165580) to the baler harness on the front right side of the baler, under the side door next to the ECU box.
2. Connect the right star wheel block at the plug on the right-hand side of the bale chute.
3. When using the optional Dye Marker (HT238DM) connect the dye marker harness (006-765IDM4) to the Dye Marker (DM) plug on the right-hand of the bale chute next to the star wheel connection plug.

Wiring Diagram – HT200A2 & HT238DM

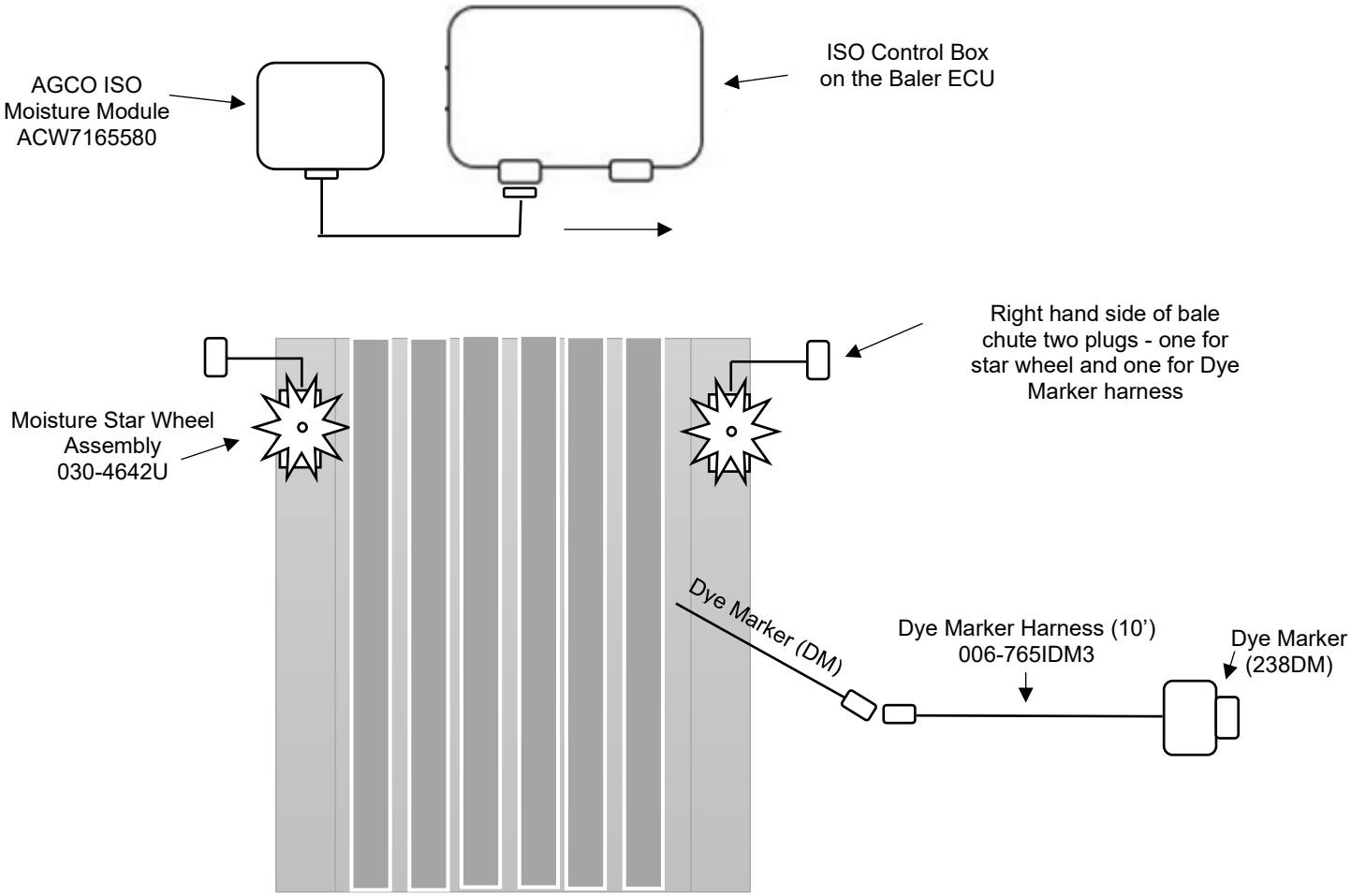

<u>*Reference Baler Harness Wiring Schematic for Detailed Breakdown</u>

Pin Outs

ISO Moisture Module - ACW7165580

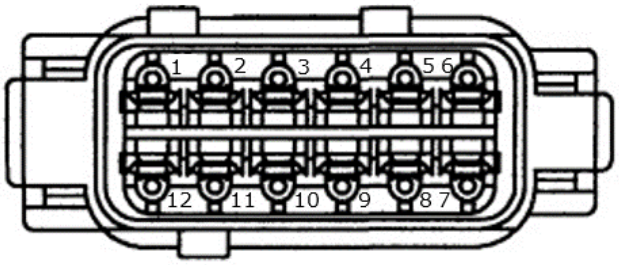

Pin 1	Red	Module Power
Pin 2	Red/Black	EOB +
Pin 3	Black	EOB -
Pin 4	Grey	Left Moisture Sensor
Pin 5	Brown	Right Moisture Sensor
Pin 6	Purple	EOB Signal
Pin 7	Yellow	CAN +
Pin 8	Green	CAN -
Pin 9	Red/White	Dye Marker 12V +
Pin 10	Black/White	Dye Marker 12V -
Pin 11	Blue	Dye Marker Prime
Pin 12	Black	Ground

Star Wheel Plug

Pin 1	Red	Signal
Pin 2	Black	Signal

Dye Marker

Pin 1	Red	+12V to Solenoid 2
Pin 2	Yellow	ISO CAN Hi
Pin 3	Green	ISO CAN Lo
Pin 4	Black	Ground to Solenoid 2

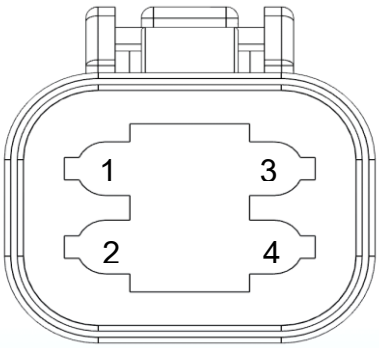

Harvest Tec LLC. Warranty and Liability Agreement

Harvest Tec, LLC. will repair or replace components that are found to be defective within 12 months from the date of manufacture. Under no circumstances does this warranty cover any components which in the opinion of Harvest Tec, LLC. have been subjected to negligent use, misuse, alteration, accident, or if repairs have been made with parts other than those manufactured and obtainable from Harvest Tec, LLC.

Our obligation under this warranty is limited to repairing or replacing free of charge to the original purchaser any part that in our judgment shows evidence of defective or improper workmanship, provided the part is returned to Harvest Tec, LLC. within 30 days of the failure. If it is determined that a non-Harvest Tec manufactured product has been used inside the Harvest Tec applicator system where the failure occurred, then Harvest Tec reserves the right to deny the warranty request at their discretion. Parts must be returned through the selling dealer and distributor, transportation charges prepaid.

This warranty shall not be interpreted to render Harvest Tec, LLC. liable for injury or damages of any kind, direct, consequential, or contingent, to persons or property. Furthermore, this warranty does not extend to loss of crop, losses caused by delays or any expense prospective profits or for any other reason. Harvest Tec, LLC. shall not be liable for any recovery greater in amount than the cost or repair of defects in workmanship.

There are no warranties, either expressed or implied, of merchantability or fitness for particular purpose intended or fitness for any other reason. This warranty cannot guarantee that existing conditions beyond the control of Harvest Tec, LLC. will not affect our ability to obtain materials or manufacture necessary replacement parts.

Harvest Tec, LLC. reserves the right to make design changes, improve design, or change specifications, at any time without any contingent obligation to purchasers of machines and parts previously sold.

Revised 1/24

HARVEST TEC, LLC.
P.O. BOX 63
2821 HARVEY STREET
HUDSON, WI 54016 USA
PHONE: 715-386-9100
FAX: 715-381-1792
Email: info@harvesttec.com