Installation Manual

Model 7704556C

75 gallon Automatic Preservative Applicator
For Massey Ferguson High-Capacity Double Balers

HarvestTec®

EST. 1976

770-26-INST
9/26

Table of Contents

	Page
Introduction, Model Reference, & Tools Needed	**3**
Tank Mounting	**4-9**
Tank Saddle Kit Breakdown	4
Installation	5
Drain Fill Kit and Tank Plumbing	6
Parts Bags and Hosing	6
Pump Plate Assembly	7-8
Mounting Control Box	7
Pump Plate Breakdown	8
Spray Shield Assembly	**9**
Plumbing and Solenoid	**10-11**
Solenoid Breakdown	11
Star Moisture Sensors	**12-16**
Star Wheel Breakdown and Moisture Harness	12
Dual-Pad Moisture Sensor Breakdown	13
Installation	14-16
End of Bale Sensor (EOB)	**17**
Flake/Stroke Count Sensor	**18**
Main Wire Harness and Connections	**19**
Main Control Modules and Harnesses Breakdown	19
Tractor Set Up	**20**
Display Options	**21-24**
Optional HT VT Display Kit	22
Optional Android Tablet Kit	23
Optional iPad Mini Display Kit	23
Optional ISC Display Adapter	24
Optional Crop Eye Forage Indicators	**25**
Crop Eye Breakdown	25
Wire Diagram	**26**
Pin Outs	**27-29**
Warranty Statement	**30**

Introduction

Read this manual carefully to ensure correct steps are done to attach the applicator to the baler. This applicator is designed to apply Harvest Tec buffered propionic acid. Use of alternative products may cause complications and voids warranty. Complications may include inaccurate readings from the flow meter and damage to system components.

Harvest Tec applicators can be installed on many baler models when using the proper tank model number and installation kit. Before installing on your baler, make sure you have the proper model & installation kit (chart below). Contact your local authorized dealer for specifications if you are unsure about your installation kit.

Left and Right sides are determined by facing in the direction of forward travel.

Model Kit Reference – for High-Capacity / Double Small Square Balers

Automatic Applicator Systems

Baler Make	Baler Model	Model Number	Installation Kit	Tank Size
Grady TwinPak	SB2XR	767	4552C	55 Gallon
Kubota	SSB2014, SSB2012	732	4554C	55 Gallon
Marcrest	210 Baler	767	4553C	75 Gallon
Massey Ferguson	1436 Double Baler	770	4556C	75 Gallon

Tools Needed

Standard wrench and socket set
Hose cutter
Metal drilling and cutting tools
Straight edge
Standard screwdriver set
Crescent wrench
Tape measure
Side cutter
Hammer
Center punch

Parts Breakdown - Model 770, 470 Base Kits
Tank Saddle Kit 030-0470-TK

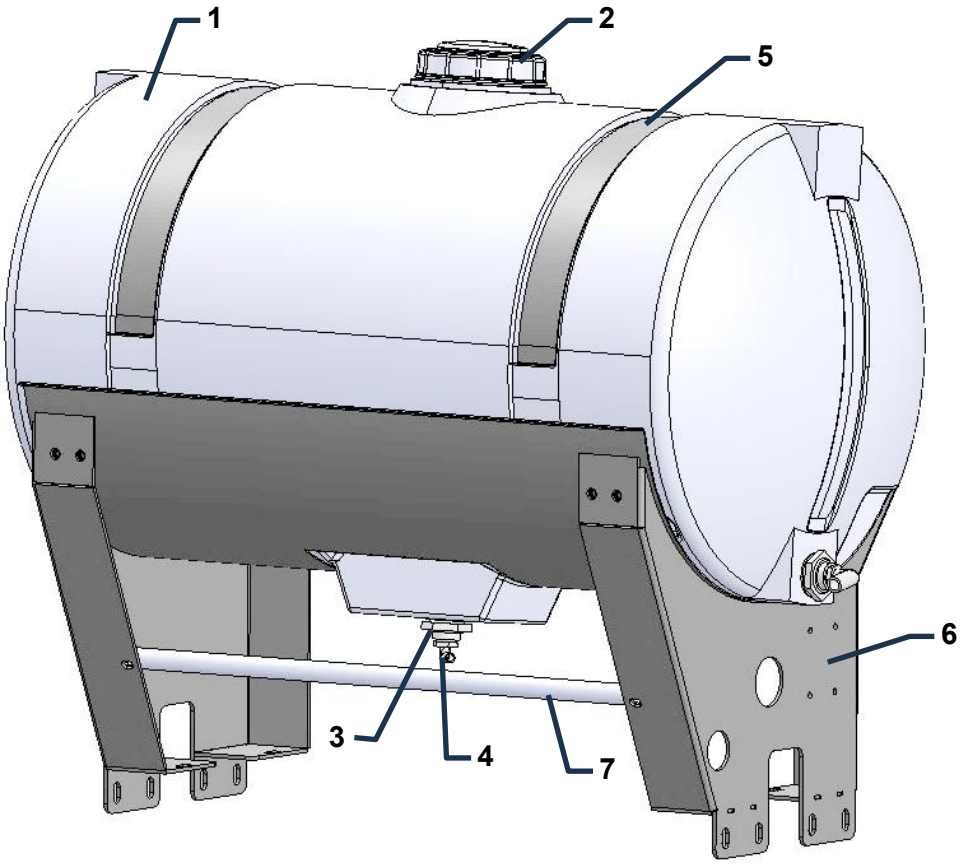

Ref#	Description	Part #	Qty
1	Tank - 75 gal.	005-9207	1
2	Tank Lid	005-9022C	1
NP	Lid Breather (replacement)	005-9022B5	1
NP	Lid Gasket (replacement)	005-9022CG	1
3	Tank Fitting	005-9100	2
4	Elbow 3/4MPTx1/2HB (replacement)	003-EL3412	1

Ref#	Description	Part #	Qty
5	Tank Strap	001-4402M	2
6	Tank Saddle	001-4445D	1
7	Railing Pipe	001-4445DP	1
NP	Pump Plate Mount (for auto system only)	001-4445DX	2

Replacement Tank (Inc. bottom tank fitting only) 005-9207

Complete Tank Saddle Kit 030-0470-TK

Tank Saddle Kit (030-0470-TK)

Installation – Tank Mounting

Tank Saddle Kit comes with the main tank saddle components pre-assembled and tank secured by the tank straps. Recommended to use an overhead lift or multiple persons to safely place and secure the tank saddle kit onto the baler.

Locate and remove the lower rail with the camera/light bracket from the factory handrail (A).

Place tank and saddle assembly on back of baler chamber, aligning the back vertical flange with the end of the bale chamber. Clamp in place.

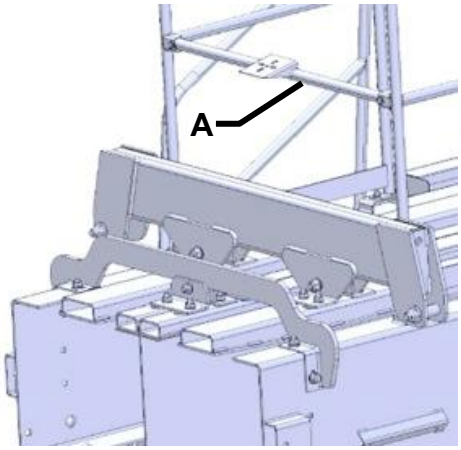

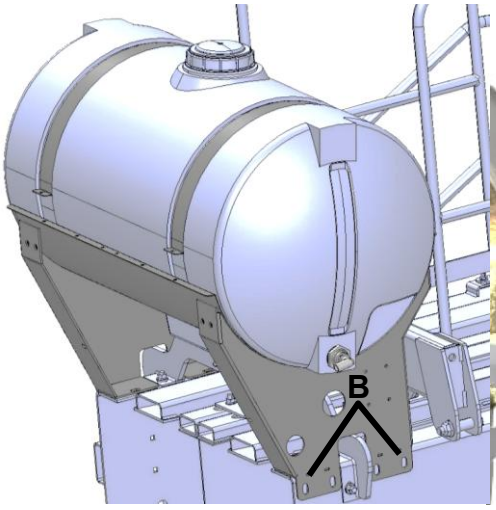

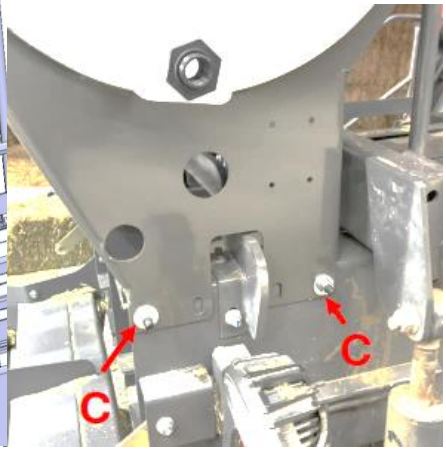

Locate front and rear slots on tank saddle where they contact the bale chamber (B). Drill two 1/2" holes on each side of baler through the side of the bale chamber. Secure with supplied hardware: 2x ½”x1-1/2” button head bolt, flat washers, lock washers and nuts on each side of baler (C).

Locate the handrail pipe bolted to the rear of the tank frame. Remove the handrail bracket and attach to the baler handrail where the OEM camera/light bracket was previously installed (D).

Install the OEM camera/light bracket to the rear of the tank frame and reinstall camera and light, if applicable (E).

Drain Fill Kit and Hoses

Installation - Drain Fill Kit (030-0493DFK)

Remove the bolt securing plate to the back side of the baler marking tight bracket (G). Locate an area on the back side of this plate where the drain/fill bracket and valve assembly (from Parts Bag 1) can be mounted without the hardware interfering with baler lights or wiring on the other side. Bolt drain/fill bracket to the back of the baler plate and reinstall on baler. Route the ¾" hose from the elbow at the side of the tank (F) to the fitting at the top of the drain/fill assembly, secure with hose clamps on each end.

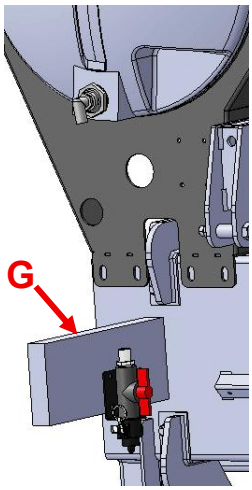

Tank Plumbing – Tank to Pump

The 1/2" hose will attach from the elbow at the bottom of the tank to the inlet side of the ball valve on the pump plate/filter assembly and be secured with hose clamps on each end.
Route hose so it will not interfere with moving parts, avoiding points where the hose may pinch or rub.

Drain Fill Line, Parts Bag Packages and Hosing

PBA-1

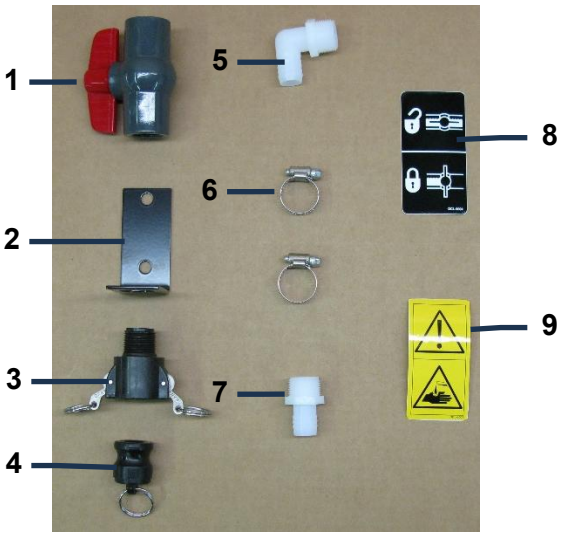

PBP-16

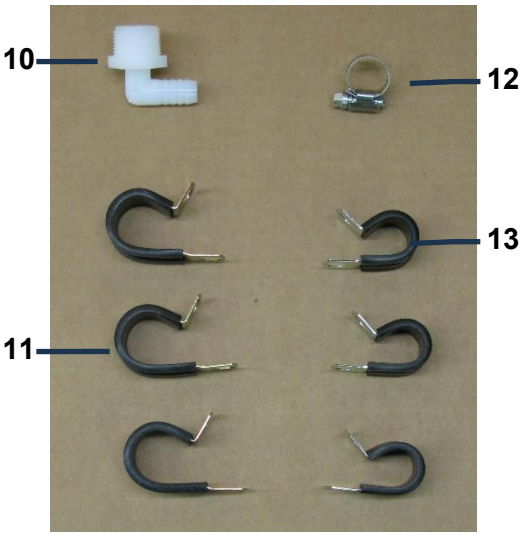

Ref	Description	Part #	Qty
1	3/4" Ball Valve	002-2200	1
2	Valve Holder	001-6702H	1
3	Female Coupler	002-2204A	1
4	Male Shut-Off Plug	002-2205G	1
5	3/4" x 3/4" Elbow	003-EL3434	1
6	#10 Hose Clamp	003-9004	2
7	3/4" x 3/4" Straight Fitting	003-A3434	1

Complete Drain Fill Kit **030-0493DFK**
(Includes 3/4" Hose Not Pictured)

Ref	Description	Part #	Qty
8	Valve Decal	DCL-8004	1
9	Hazard Decal	DCL-8001	1
10	3/4" x 1/2" Elbow	003-EL3412	1
11	3/4" Jiffy Clip	008-9010	3
12	#6 Hose Clamp	003-9003	1
13	Small Jiffy Clip	008-9009	3

Hoses

NP	1/2" EVA Tubing (Pump to Tips)	002-9001	20 ft
NP	3/4" EVA Tubing (Drain/Fill Line)	002-9002	6 ft

Pump Plate Assembly (PMP-7636P)

Installation

Secure Pump Plate Mount Brackets (001-4445DX) to the back side of the tank assembly using supplied 3/8-16x1” flange head bolts (x2) on each side to secure to the rear of tank assembly. Align parallel before tightening.

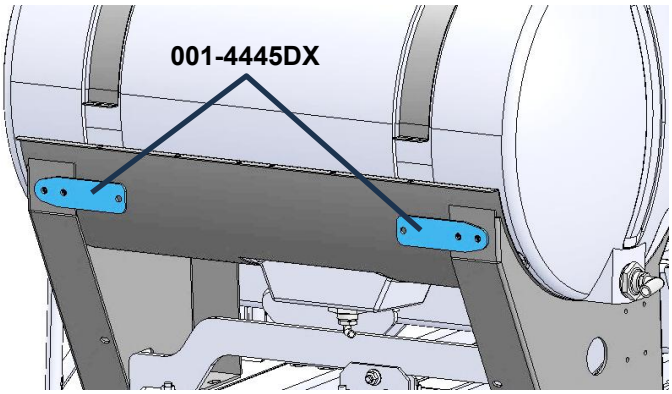

Attach Pump Plate Assembly (PMP-7636P) to each mounting tab using supplied 3/8-16x1” flange head bolt and 3/18-16” flange nut. Center the pump plate on the tank assembly before tightening hardware.

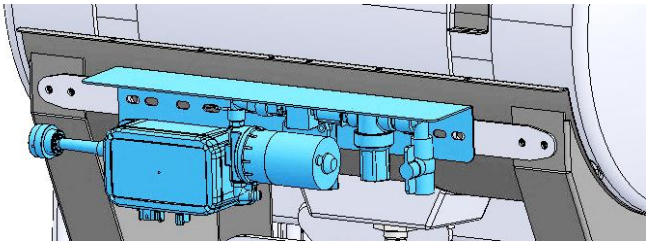

Control Box

Mounting to Pump Plate

Locate the 700 series IPM Control box (006-7671SS) from the controls package box. Mount the IPM Control to the pump plate shield (001-4648X) by using hardware included in the controls package box. The IPM Control box will mount on the pump plate. Pump plate assembly attaches to pump plate mounting bracket with hardware supplied within the pump plate box.
Triangle Flow Meter plug attaches to plug on bottom of IPM.
Moisture Sensor harness also attaches to bottom of IPM module.

Parts Breakdown for Pump Assembly

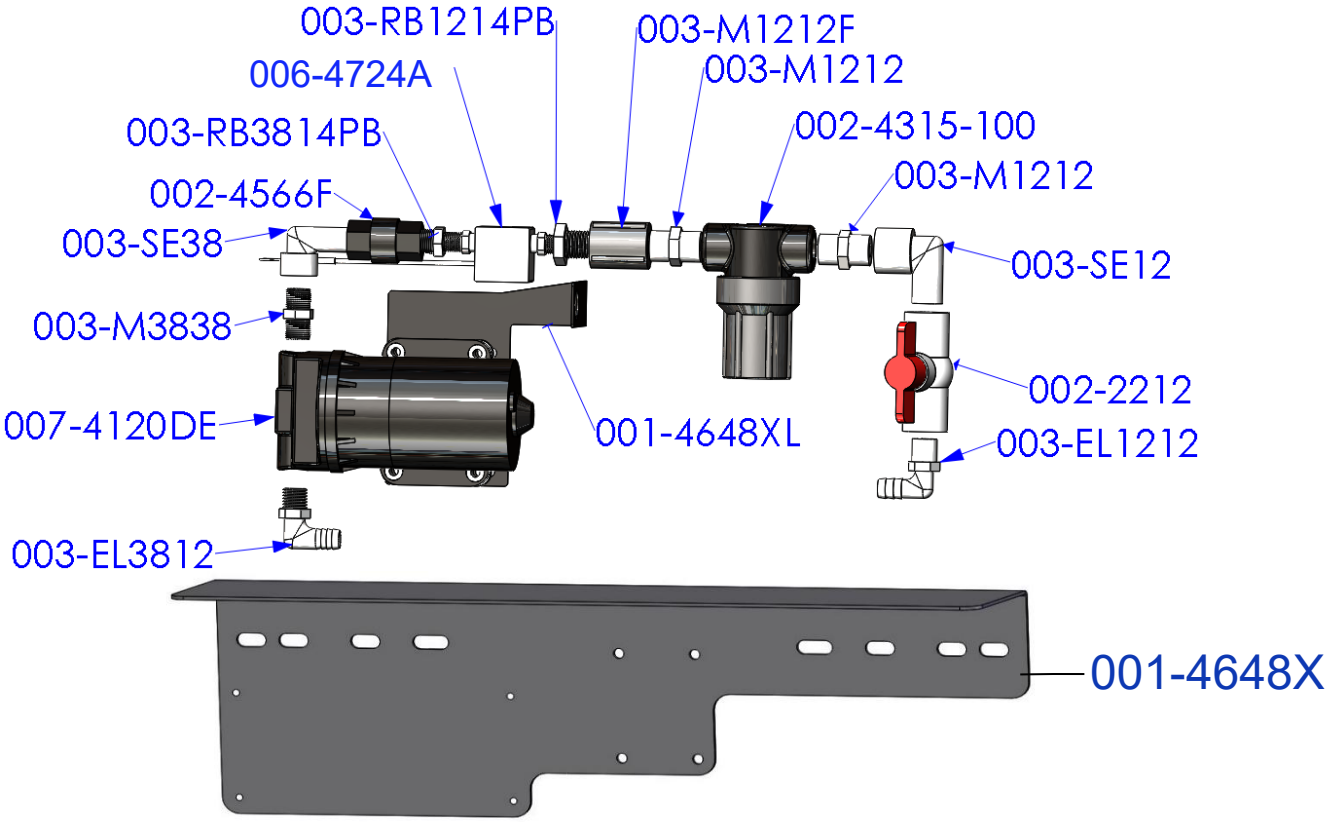

Part#	Description	Qty	Part#	Description	Qty
003-EL3812	3/8”MPT X 1/2"HB Elbow	1	003-M1212	1/2" Union	2
007-4120DE	700/300 Series Pump	1	002-4315-100	1/2" Line Strainer-100 Mesh	1
003-M3838	3/8” x 3/8” Union	1	003-SE12	1/2" Street Elbow	1
003-SE38	3/8” Street Elbow	1	002-2212	1/2" Ball Valve	1
002-4566F	3/8” Check Valve	1	003-EL1212	1/2"MPT x 1/2"HB	1
003-RB3814PB	RB 3/8” x 1/4” Reducer	1	001-4648XL	300 Pump Support	1
006-4724A	Flow Meter-Deutsch Plug	1	001-4648X	Pump Plate Mount	1
003-RB1214PB	RB 1/2" x 1/4" Reducer	1	003-A1212*	1/2" MPTx1/2”HB(Not Pictured)	1
003-M1212F	1/2" Coupler	1	003-A3812*	3/8" MPTx1/2”HB(Not Pictured)	1

*Note: Due to alternative baler designs, elbow 003-EL3812 can be replaced by straight fitting 003-A3812. Elbow 003-EL1212 can also be replaced by straight fitting 003-A1212. Both straight fittings are included.

Filter Bowl Replacement Parts

002-4315F	Filter Bowl
002-4315D	Filter Bowl Gasket
002-4315A	Replacement Screen-100 Mesh
002-4315B	Replacement Screen- 80 Mesh

Pump Plate Mounting – 770 Kits Only

001-4445DX Pump Plate Mount Brackets (Qty 2 required)

Completed Assembly – PMP-7636P

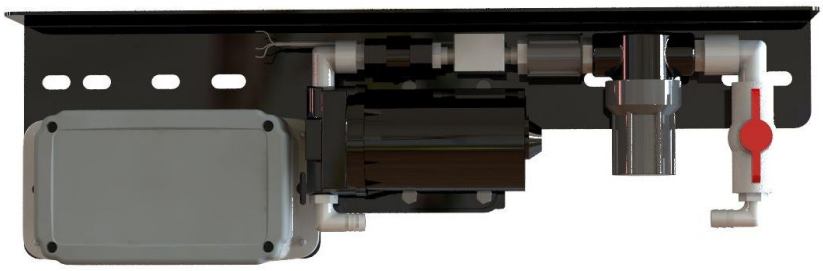

Spray Shield - Installation Kit 4556C

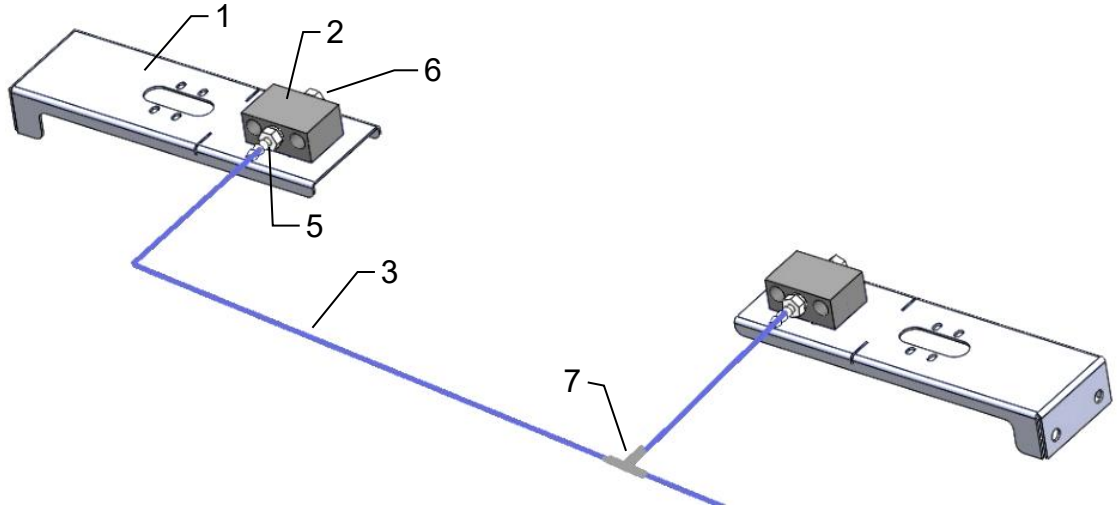

Ref	Description	Part #	Qty
1	Shield Holder	001-4445S	2
2	Spray Manifold	001-4435NSB	2
3	1/4" Hose	002-9016	3 ft
NP	Hose Clamp	003-9002	5
5	1/4MPT x 1/4HB	003-A1414	2
6	1/4” Hex Plug	003-F14	2
7	All Barb Tee	003-T1414	1

Ref	Description	Part #	Qty
NP	Tip* -Low	004-T8001-PT	2
NP	Tip* -Standard	004-T8004-PT	2

*Tip color subject to change

Complete Assembly **030-4556C**

Spray Shield Mounting – Installation Kit 4556C

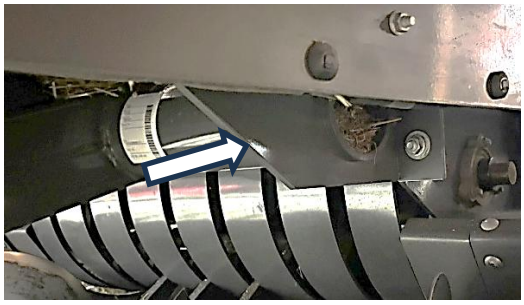

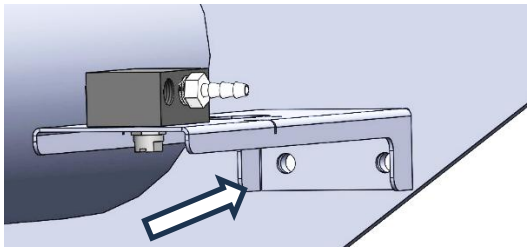

Locate the vertical bracket on the LH side of the baler tongue assembly. Measure 2” up from the bottom horizontal edge and mark a parallel line. Use the spray shield holder to align the two holes in the side flange of the holder on the parallel line. Align the front bottom corner of the spray shield bracket with the angled edge on the front bracket. Mark both hole locations and drill 2x 3/8” holes.

Bolt spray shield holder (001-4445S) to LH side of baler frame with 2x 5/16x1” bolts, lock washers, and nuts. Hose barbs should point towards the front of the baler. Repeat process for RH side spray shield holder assembly.

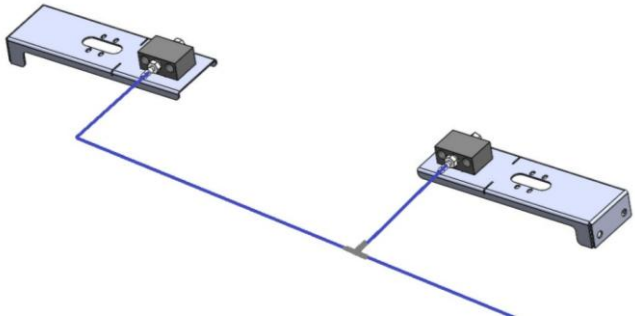

Connect hose to RH spray nozzle assembly, secure with hose clamps, and route hose over the top of the baler tongue to the LH side of the pickup. Connect hose(s) from RH side of the baler to tee fitting (001-T1414) on LH side of tongue. Connect hose from LH spray bracket assembly to tee fitting. Route hose from the tee fitting to the LH side of the baler and connect to solenoid assembly.

Plumbing and Solenoid

A. Intake Line

Locate parts bag 16. Use the 003-EL3412 on the bottom of the tank to route 1/2" line (002-9001) to the fitting (003-A1212 or 003-EL1212) used on the ball valve attached to the pump plate. Attach hose clamps (003-9003) on both of the fittings.

B. Discharge Line

Connect 1/2" hose to discharge fitting and route hose back under the tank and down the LH side of baler, following the existing brackets/lines between the chamber and the twine box. Route hose down LH side of baler and secure to existing lines with cable ties (J). Locate the support bracket between the twine box and chamber that supports the existing lies and secure hoses to this bracket (K). Front view of hose secured to top of support bracket (L). Route the 1/2" hose from the pump output toward the front of the baler to connect to the solenoid assembly (SOL-3SP-A).

C. Solenoid Assembly Installation

The Pulsing Solenoid is installed at the transition from the 1/2” hosing from the pump discharge line and the 1/4" line to supply the spray nozzles. Transition should be close to the spray tips in an accessible location. The best suited placement for this transition is a location where the solenoid can be placed in a horizontal position in-line with the hoses and clear of the pickup and any moving parts. This location is to be determined at the discretion of the installer. (See example). Be sure to provide ample hose length to allow for full range of motion of the pickup head- too short of hose may cause hosing to pull out or break connections when pickup head is lowered.

Attach straight fitting (003-A1412) into end of 1/2" hose from the pump and secure with hose clamp (003-9003). Thread connector (004-1207G) onto fitting and place rubber washer (004-1207W) into quick disconnect (004-1207H). Connect to inlet side to the solenoid valve body (004-1207VF). Attach quick disconnect from spray nozzles/shield to outlet side of solenoid valve body, with rubber washer inside the quick disconnect.

Attach Solenoid Harness to Solenoid and route harness to connect with main baler harness at only one of the plugs marked ‘SOL1’. Secure harness to baler away from any moving parts and pinch points using cable ties.

D. Solenoid Maintenance

Check before use for any cracks or leaks in fittings- replace as necessary. The center section of valve body may need to be cleaned if solenoid does not pulsate when power is supplied by applicator. See breakdown for cleaning instructions. Components are compatible with Harvest Tec Buffered Propionic Preservative and use of other products may cause an increased need for service or replacement.

E. Standard and Low Output Tips

Your baler comes with the Standard tip set installed.

-Low tip set is recommended for use with low baling rates or light baling conditions.
-Standard set will cover most field baling conditions

700 Pulsing Solenoid Breakdown – Small & Round Balers

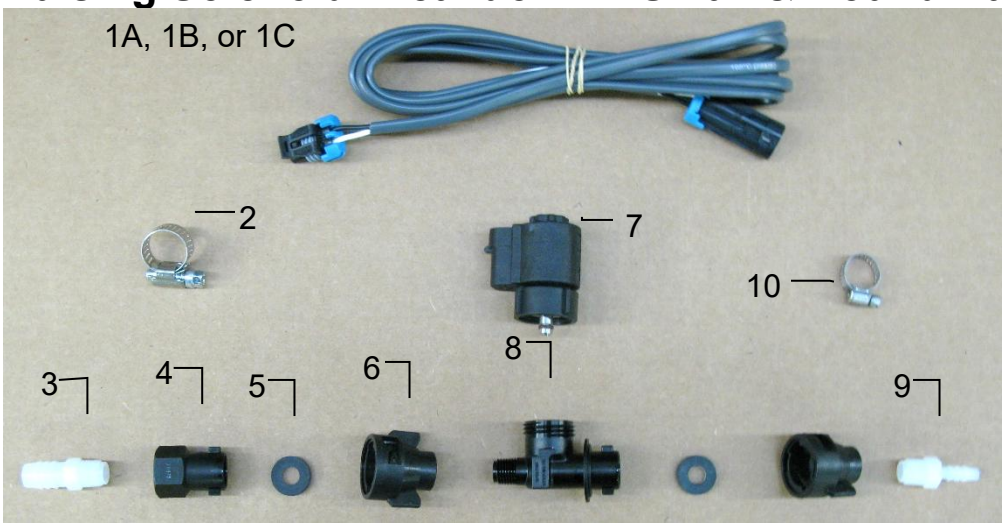

Ref	Description	Part #	Qty
1A	Solenoid Harness (5')	006-3650-S1	
1B	Solenoid Harness (10')	006-3650-S2	
1C	Solenoid Harness (15')	006-3650-S3	
2	#6 Hose Clamp	003-9003	1
3	1/4"x1/2" Straight Fitting	003-A1412	1
4	1/4" Female Connector	004-1207G	1
5	Rubber Washer	004-1207W	2

Ref	Description	Part #	Qty
6	1/4" Female Disconnect	004-1207H	2
7	Solenoid	002-2203F	1
8	Solenoid Valve Body	004-1207VF	1
9	1/4" x 1/4" Straight Fitting	003-A1414	1
10	Mini Hose Clamp	003-9002	1

Solenoid Packages

Complete Assembly Pkg. A	SOL-3SP-A
Complete Assembly Pkg. B	SOL-3SP-B
Complete Assembly Pkg. C	SOL-3SP-C

Expanded View of Pulsing Solenoid (002-2203F)

Replacement Pulsing Solenoid O-Ring Kit available (002-2203FG)
(Includes EPDM O-Rings 6, 8, 9 shown below)

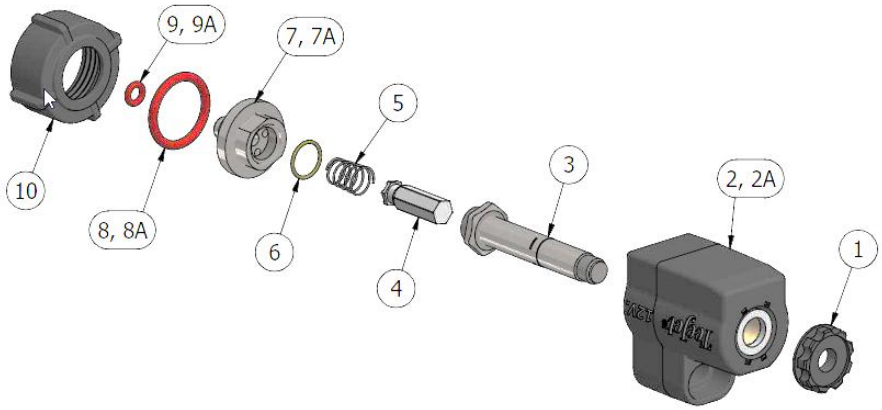

To Clean Solenoid Valves:
The Center Section can be removed from Housing #2 by loosening #1 from #3. Once removed, use wrenches on components #3 and #7 and gently turn to loosen and separate. Soak parts #3-10 in warm soapy water, clean with a soft bristle brush, rinse with clean water to remove buildup before reassembly.

Star Wheel Sensors (030-4642U/UE)
700 Series Small Square Systems – Reinforced Yellow Block 2026

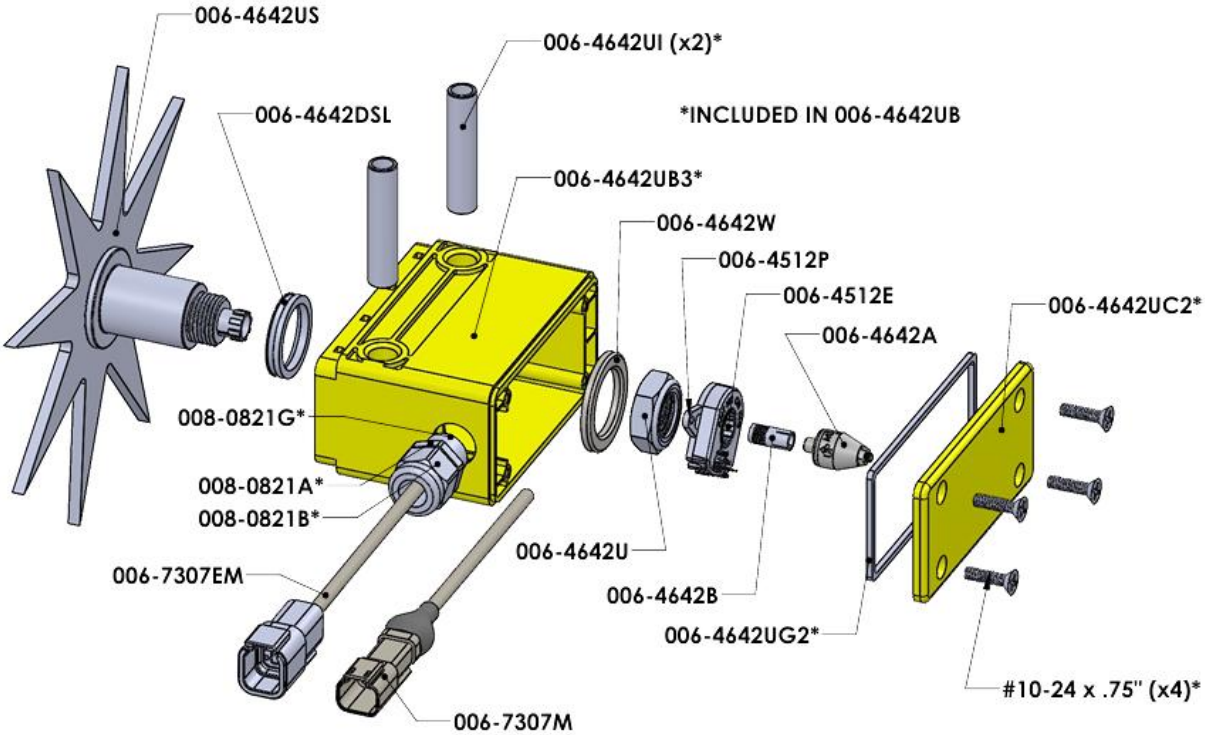

Description	Part#	Qty
Star Wheel (includes swivel insert)	006-4642US	1
Dust Seal Gasket	006-4642UG	1
Star Wheel Block Only	006-4642UB3	1
Star Wheel Block End Cap	006-4642UEC	1
Block Inserts	006-4642UI	2
Wire Compression Grommet	008-0821A	1
Grommet Locking Nut (internal)	008-0821B	1
Washer for Wire Grommet	008-0821G	1
Bearing Washer	006-4642W	1
Star Wheel Nut	006-4642U	1
Encoder Mount (030-4642UE only)	006-4512P	1
Encoder (030-4642UE only)	006-4512E	1
Swivel Insert	006-4642B	1
Electric Swivel	006-4642A	1
Star Wheel Block Gasket	006-4642UG2	1
Star Wheel Block Cover	006-4542UC2	1

Description	Part#	Qty
Encoder Harness Plug (6 Pin) (030-4642UE only)	006-7307EM	1
Moisture Harness Plug (2 Pin) (030-4642U only)	006-7307M	1
Star Wheel Spacer Plate (not pictured)	001-6707ES	1
Star Wheel Mounting Hardware (5/16" x 3-1/4" Allen Head Screws, nuts, locks and washers)		2

Optional Star Wheel Accessories:

Twine Guard -Left	001-4645H
Twine Guard -Right	001-4644H
Star Wheel Drilling Template	001-4642T
Replacement Star Wheel Block*	001-4642UB
Complete Non-Encoder Star Wheel	**030-4642U**
Complete Encoder Star Wheel	**030-4642UE**

Moisture Harnesses

Description	Part #
Moisture Wire Harness (12' & 13' Length Sections)	006-7307EM2
Moisture Wire Harness (16' & 17.5' Length Sections)	006-7307EM3
MF DB Moisture Harness (for 3 Sensor Connections)	006-7307EMX
Kubota DB Moisture Harness (for 4 sensor connections)	006-7307EMK

Dual-Pad Moisture Sensor Assembly (030-4643DB)

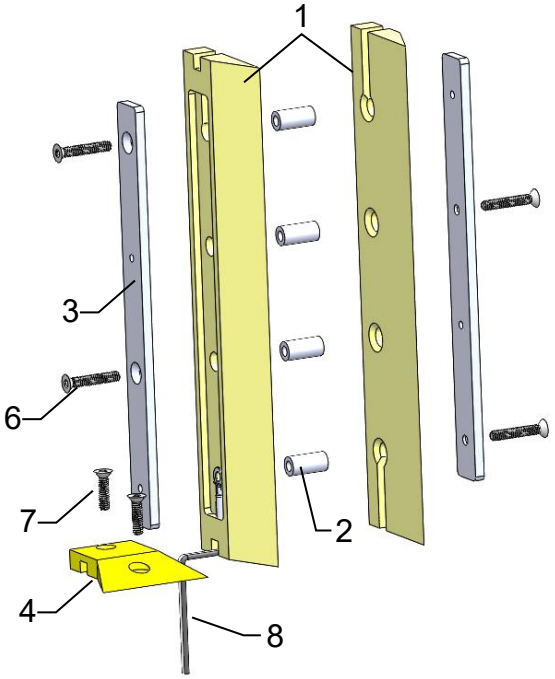

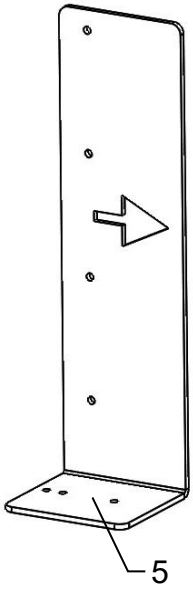

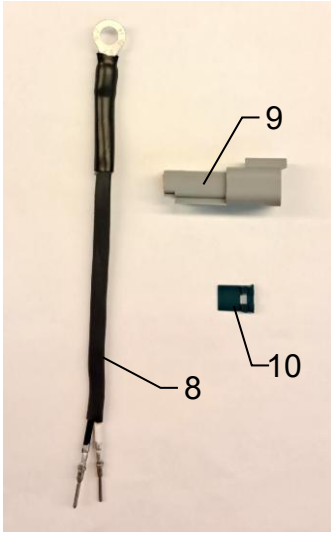

Ref	Description	Part #	Qty
1	Sensor Isolator	006-4643A	2
2	Isolator Bushing	006-4643B	4
3	Sensor Pad	006-4643C	2
4	DB Base Isolator	006-4643D	1
5	DB Drilling Template	001-4643E	1
6	1/4-20 x 1-1/2" 82deg Torx FHS	Hardware	4
7	1/4-20 x 1" 82deg Torx FHS	Hardware	2
8	DB Wire Leads (inc. parts 9, 10)	006-4643F	1
9	Plug Connector - DT04-2P	006-DT04-2P	1
10	Plug Wedge - W2P	006-W2P	1
NP	RTV Sealant	Hardware	1

Complete Assembly **030-4643DB**

<u>Moisture Sensor Kit</u> – (MSH-7SS-MDB)
Installation – 770 Applicator Kit

Center Rail Removal

Moisture sensors are mounted in each of the bale chambers. Remove the center rail assembly of each bale chamber to allow for clearance and installation. Unbolt the two carriage bolts at the front of each chamber and the single longer bolt that fasten the center rails to the rear tension beam. Drop the center rails down and remove from each of the bale chambers. Rails will be reinstalled once moisture sensors are installed into the bale chambers.

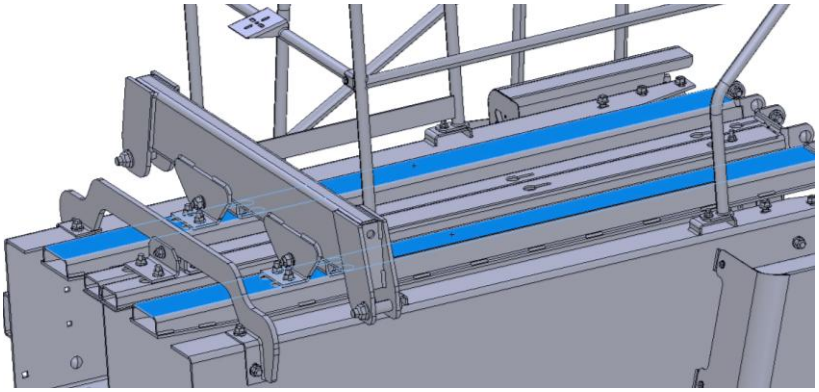

Outboard Star Wheel Installation

Locate the metal Star Wheel Drilling Template (001-4642T). Align the front edge of star wheel template against existing protruding plate in the RH bale chamber as shown (or approx. 3in. from the front edge of the bale chamber). Place the vertical flange of the template against the inside edge of the bale chamber flange. Clamp template in place and use 5/16" drill bit through the template to align and mark the two holes closest to the vertical flange. Remove template and use a smaller drill bit to make pilot holes through the chamber steel. Use 5/16" drill bit to bore out pilot holes to finished size. Repeat process for the LH bale chamber.

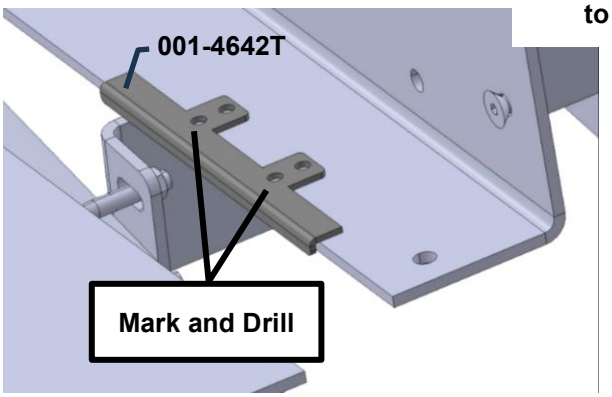

Star wheel sensors are mounted from the bottom sides of each bale chamber. Encoder Star Wheel (030-4642UE) with the 6-pin plug connector **<u>MUST</u>** be mounted to the LH bale chamber with the star rotating clockwise as pass through above in the chamber.

Star Wheel (030-4642U) with the 2-pin plug connector, is mounted to the bottom of the RH bale chamber.

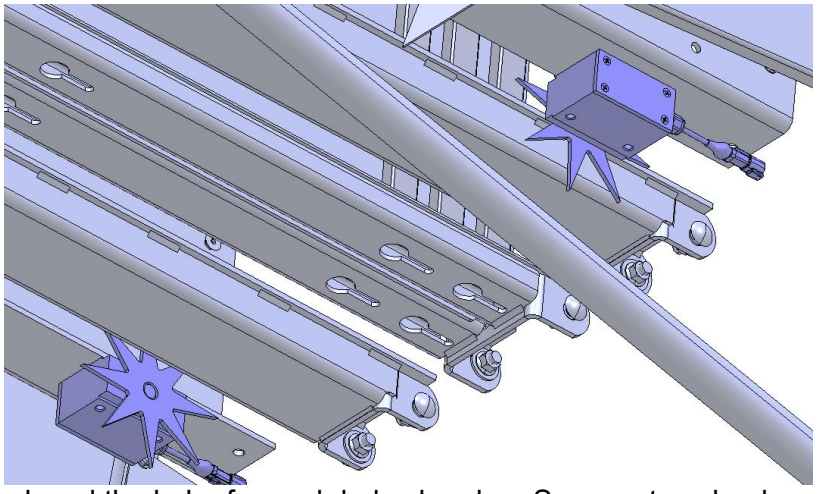

Install each of the star wheel assemblies using Star Wheel Spacer Plate (001-6707ES) placed between each star wheel block and the baler for each bale chamber. Secure star wheels and spacer plates with supplied hardware 2x 5/16x3-1/4" BHCS, 5/16" lock washer, and nut. Hand tighten with wrench or ratchet - not exceed 13 ft-lb torque. **<u>DO NOT USE AN IMPACT TO TIGHTEN.</u>** Over torquing star wheel mounting hardware can cause pre-mature wear of the star wheel blocks.

Inboard Dual-Pad (030-4643DB)
Installation

Locate the Dual-Pad Drilling Template (001-4643E) and align it against the center divider in the RH bale chute, approximately 8” from the front of the bale chamber or 1/2" behind the diverters bolted to the center divider at front of bale chamber. Arrow on the template points towards the front of the baler. Clamp the template in place and use the holes in the template as a guide to drill the seven 3/16” holes through the center divider and the bottom tube. Remove template after drilling holes. Next, drill out the middle hole through the bottom tube to 1/2" diameter and also drill out the 4 holes through the center divider each to 1/2" diameter.

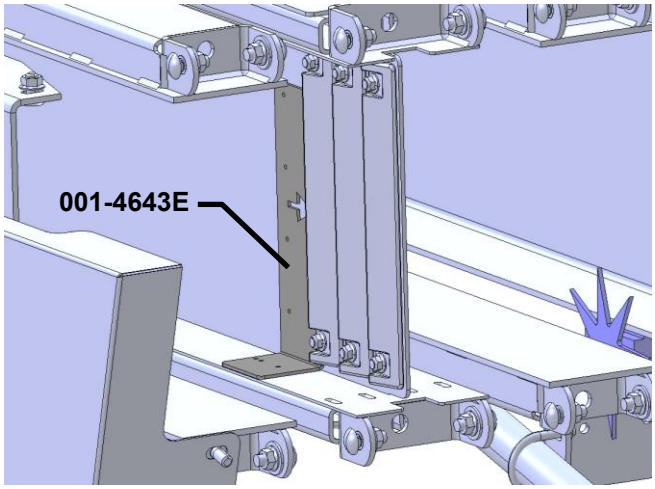

Insert isolator bushings (006-4643B) through the four 1/2” holes in the center divider.

Use the supplied two 1/4-20 thread cutter bolts to tap (top layer only) of the two remaining 3/16” holes of the tube at the bottom of the chamber.

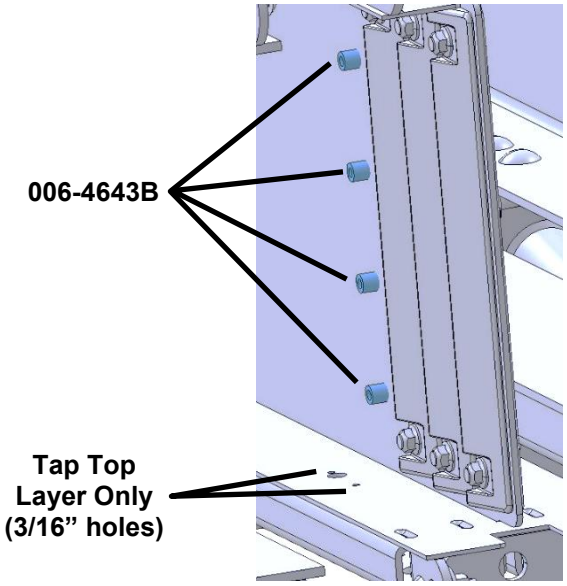

Wire Lead (006-4643F)

Insert the Wire Leads (006-4643F) through the 1/2” hole drilled through the bottom of the chamber.

Install the wire leads into the back of the supplied Plug Connector (006-DT04-2P):

White wire to location 1/A
Black wire to location 2/B.

Once wires have been fully inserted, install the locking wedge (006-W2P) into the opposite end of the connector.

Align the eye loop with the bottom isolator bushing, bending the wires so they lay flush to the bale chamber as shown.

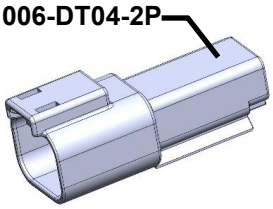

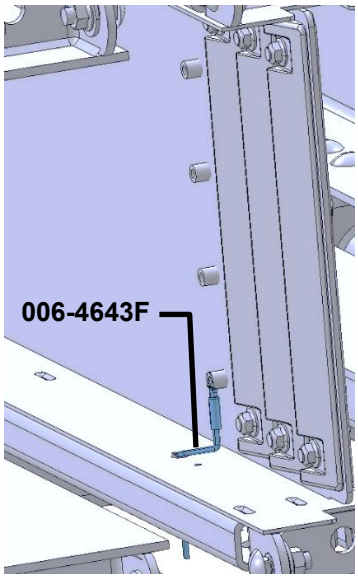

Install the two Moisture Sensor Isolator Pads (006-4643A), on each side of the diverter wall. Align pads with the isolator bushings.

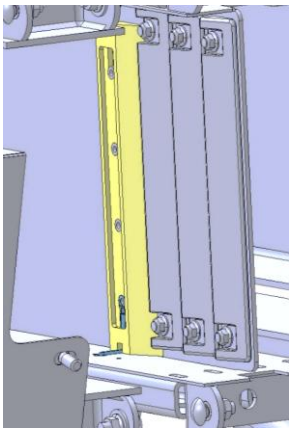

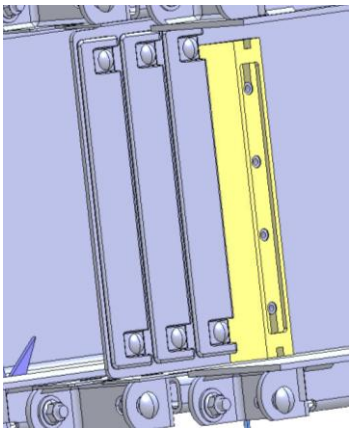

Install the two Moisture Sensor Pads (006-4643C) to each isolator pad using two of supplied 1/4-20 x1-1/2" FHS from each side. Screws secure through the sensor, isolators, and thread into the opposite sensor pad. Tighten the 4 screws by hand to no more than 10-12 ft-lb torque.

Apply RTV silicone sealant to the notch in the top and bottom of the sensor isolator in the LH chamber, to seal from moisture and dust.

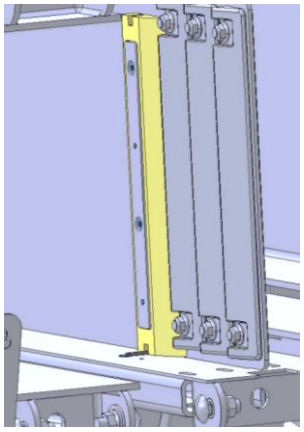

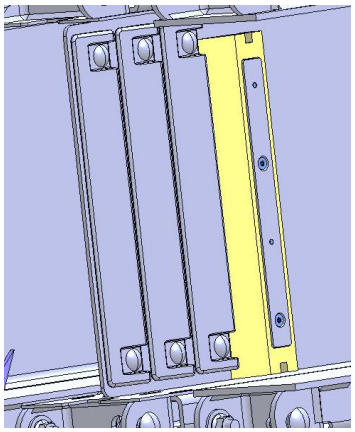

Install the Base Isolator (006-4643D) in the RH bale chamber against the sensor isolator. Secure to the bottom of the bale chamber using two supplied 1/4-20 x 1" FHS. Apply RTV silicone sealant to the notch in the top of the sensor isolator and notch at the side of the base isolator to seal from moisture and dust.

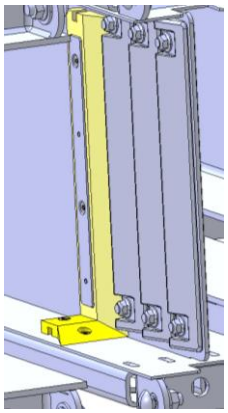

Upon completing installation of the star wheels and the dual pad sensor assembly, reinstall factory top center rails. Bolt the front end of each center rail in place using previous factory bolts, followed by reinstalling the rear bolt that connects each center rail to the rear tension cross member.

Moisture Harness (006-7307EMX)

Connect Moisture/Encoder Harness (006-7307EMX) to the port on the IPM Control mounted on the back side of the tank assembly (on pump plate). Route harness around the LH side of the tank assembly, downward behind the LH marker light bracket, to the bottom LH rear corner of the bale chamber.

Follow the bale chamber forward with the connector labeld MC1-LH/Encoder (6-pin plug) and connect to the plug of the LH encoder star wheel assembly.

Route the remaining harness across the back end of the bale chamber towards the RH side. At the center of the bale chamber, route connector labeled MC2-C (2-pin plug) forward under the center camber divider and connect to the plug from the dual pad sensors.

Route the remaining harness connector labeled MC1-RH (2-pin plug) forward from the RH rear bale chamber corner and connect with the plug from the RH non-encoder star wheel assembly.
Secure harness to baler away from moving parts and pinch points using cable ties.

End of Bale (Flake/Stroke) Sensor Kit
EOB-7SS-MDB

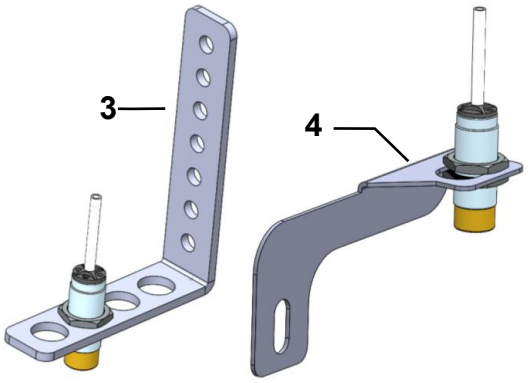

Ref	Description	Part #	Qty
1	End of Bale Sensor	006-7401	2
2	End of Bale Ext.	006-7401EXT	2
3	Inline EOB Bracket	001-4648SI	1
4	DB Flake Counter Bracket	001-4648DB	1
	Complete Assembly	**EOB-7SS-MDB**	

End of Bale (EOB) Bracket and Sensor
Installation – 770 Applicator

On the RH side of the bale chamber, position the leg of the EOB Bracket (001-4648SI) with small holes against the side of the bale chamber to determine which large hole in the bracket best aligns with the needle arm when located at the 'home' position.
Once bracket hole location is determined, install the EOB Sensor (006-7401) into the bracket and secure with the two supplied jam nuts. Hold the bracket (with sensor installed) with the small holes against the bale chamber, aiming the yellow sensor end at the top of the needle arm. Final spacing between the yellow end of the sensor and the top of the needle arm will be 1/8" to 1/4".

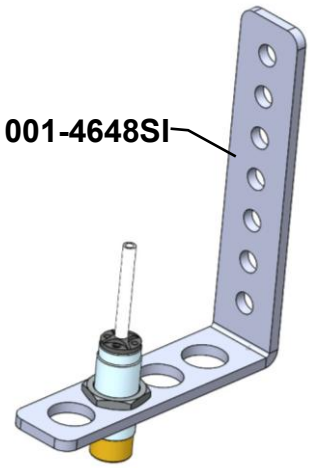

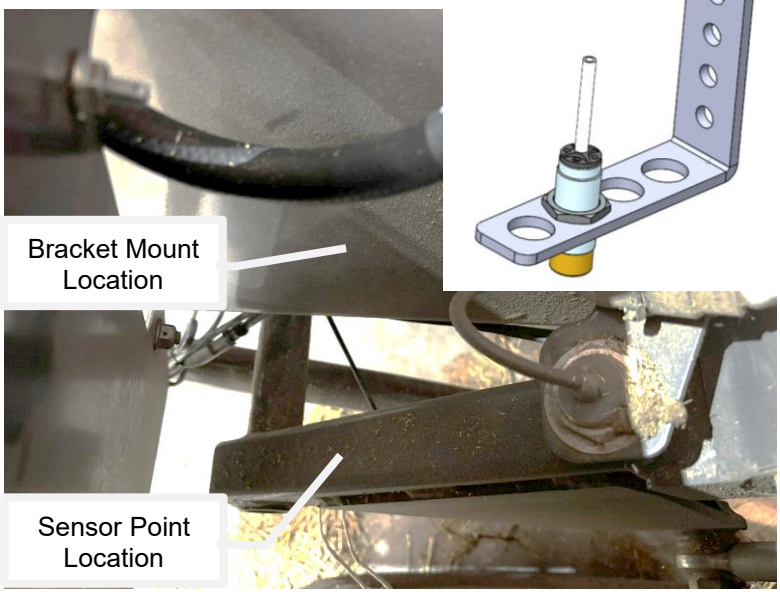

Mark and drill two of the small hole locations to 3/8" holes. Secure the EOB bracket to the side of the bale chamber using two of the supplied 5/16x1" BHCS, lock washers, and nuts. Ensure button head of bolts are on the inside of the bale chamber and do not interfere with moving components.
If needed, loosen the jam nuts on the sensor to adjust the gap to be within 1/8 - 1/4". Tighten the jam nuts.
Route EOB Sensor wiring along existing lines towards the lower RH rear corner of bale chamber. Secure EOB wiring to the moisture harness using cable ties. EOB Sensor Extension Harness (006-7401EXT) will be used to connect EBO sensor to the main baler wiring harness (006-762B) port labeled 'EOB'.

Flake/Stroke Count Sensor and Bracket
Installation – 770 Applicator

Sensor will be mounted to the RH side of the bale chamber hay dog. Locate the factory bolt behind this hay dog and remove the nut from this bolt.

Install the Flake Sensor (006-7401) into the Flake Counter Bracket (001-4648DB) and secure loosly with supplied jam nuts. Place the flake sensor bracket over the factory bolt protruding from the bale chamber and resecure using the factory nut. Slide the flake bracket down as far as possible in the slot before tightenening.

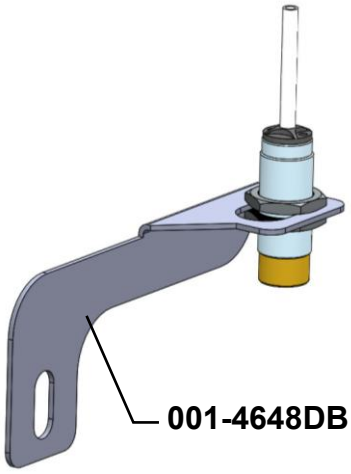

Adjust the flake sensor in the bracket slot to be directly over the hay dog as it retracts from the chamber when each flake is made. Allow 1/8” to 1/4” gap between the yellow end of the flake sensor and the top of the haydog. Ajdust sensor and tighten jam nuts to secure.

Route Flake Sensor wiring along existing lines towards the lower RH rear corner of bale chamber. Secure EOB wiring to the moisture harness using cable ties. Sensor Extension Harness (006-7401EXT) will be used to connect flake sensor to the main baler wiring harness (006-762B) port labeled ‘Stroke Counter’.

Main Wire Harness and Connections

Main baler harness (006-762B) connects to the IPM Control Module mounted on the pump plate on the rear of the tank assembly. Route harness from the IPM around the LH side of the tank assembly, downward behind the LH marker light bracket, and around to the bottom LH rear corner of the bale chamber.

From the front lower LH rear corner of the chamber, route the wire harness forward to the front of the baler along the LH side, following the support bracket between the LH twine box and chamber.

Keep harnesses away from moving parts and hydraulic hoses. Secure with existing cable clamps or use cable ties to secure to factory lines. Once all sensor connections are made on the harness, connect to the IPM module and secure all harness wires.

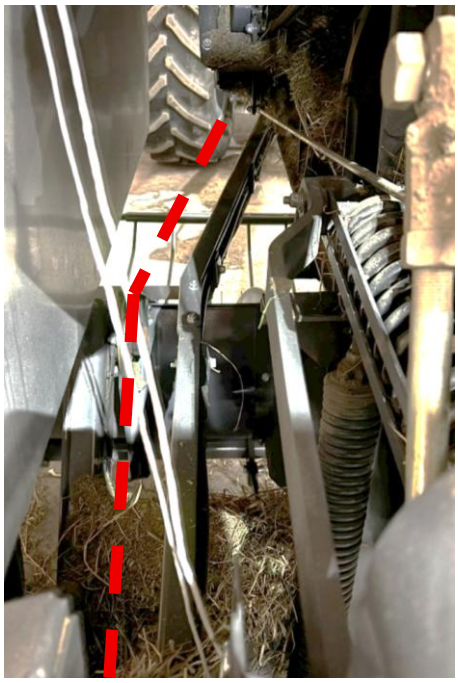

Main Control Modules and Wiring Harnesses

Ref	Description	Part#	Qty
1	Power Lead Baler 20’	006-762B	1
2	Power Lead Tractor	006-765IC	1
3	Key Switch Wire	006-765CPH	1
4	ISO Pump Module	006-7671SS	1
5	ISO Comm. Module	006-6673	1

Ref	Description	Part#	Qty
NP	120 Ohn Resistor	006-700R*	1
NP	Dust Plug Kit	006-765DP	1
NP	Optional Lightning to USB-A Communication Cable	006-6672USBC	1
NP	Optional USB-C to USB-A Communication Cable	006-6672USBX	1

*006-700R installation on 006-762B harness is required at all times when operating the small square 700 series applicator

Tractor Setup

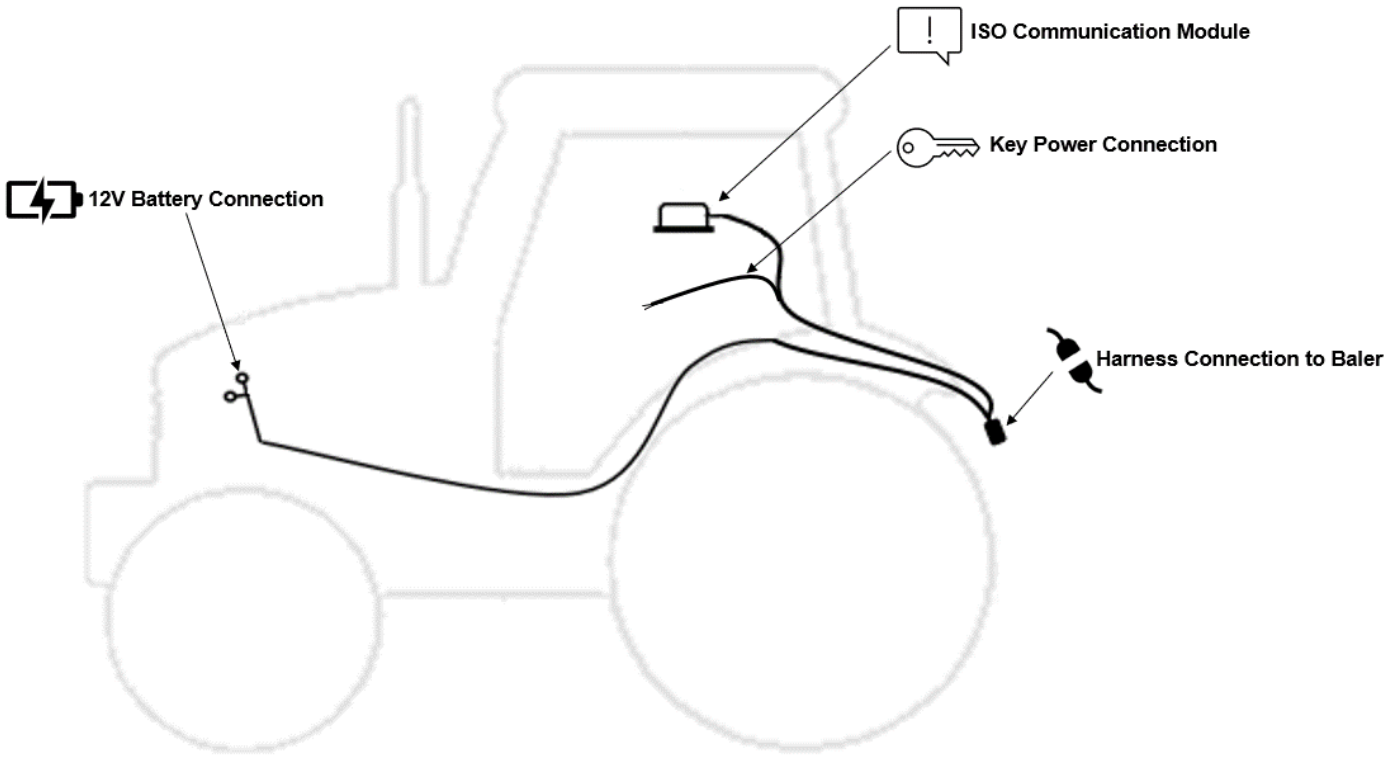

The general tractor setup of the 700 Series applicator can be seen above. The main harness of interest is the tractor power/communication harness (006-765IC). This harness will connect at the tractor battery, to the ISO Communication Module (ICM) mounted in the cab, a keyed power connection point, and connect at the hitch area to the baler power/communication harness (006-762B). View below to see highlighted installation instruction:

12V Battery Connection

The 12V battery connection must be at the tractor battery. Connection to alternative locations such as an accessory port can cause problems with applicator system.
MUST BE CONNECTED DIRECT TO TRACTOR BATTERY TERMINALS

ISO Communication Module

The ISO communication module is to be mounted inside the cab. Other mounting locations can lead to issues with weathering and operation. Once installed and the system is powered, a green light will turn on with the ICM module.

Key Power Connection

Ensure a solid keyed connection is found inside the cab and wired into. Poor keyed power connection can result in applicator system issues.

Harness Connection to Baler

The tractor harness connects at the hitch to baler power/communication harness (006-762B). This will allow the system components to communicate with one another. Ensure connections are debris and corrosion free.

Display Options

Optional Harvest Tec Display

The 700 series Harvest Tec Display will allow you to set your real time baling parameters to ensure the most precise application to every bale. This is done by utilizing the improved touch technology to select objects, enter data, and swipe through operational screens.

The Harvest Tec Display offers easy integration by connecting to the additional CAN plug on the 006-765IC harness. Once connected the Harvest Tec display will power up with applicator system.

Note: The Harvest Tec Display must be used as a standalone display, the baler cannot run both ISO integrated (with compatible large square balers only) and also on the Harvest Tec Display. Must be one or the other. Removal of the baler integration harness is required to use the HT Display. Baler ISO integration option is not available for small square and round baler systems.

Optional Tablet Display

Precision Baling App

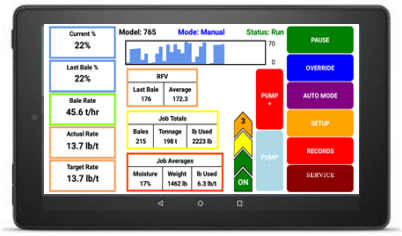

The iOS or Android Tablet displays offer the ability to communicate with the 700 series applicator system via hard-wired connection to the ISO Communication Module (ICM). Through the free Precision Baling App, the operator can set real time baling parameters to ensure the most precise application to every bale. This provides a multi-use option while utilizing the improved app to select objects, enter data, and easily switch through operational screens.

The Tablet Display offers easy integration by connecting a data transfer/charging cable to the USB port on the ICM module (USB port closest to LED light). The Harvest Tec Applicator will display upon opening the app and powering up the applicator system when connected. Tablets can be used in addition to ISO integrated baler VT display (on compatible large square baler systems only).

***Made for iPad® (iOS 15 or higher) or Android Tablet (Does not work with Amazon Fire).**
Required to be running the current operating system or one version previous.
iPads 10+ years are no longer supported by Apple and are unable to download app.
*iPad is a trademark of Apple Inc., registered in the U.S. and other countries.

Optional Harvest Tec Display Kit (030-7670DK)

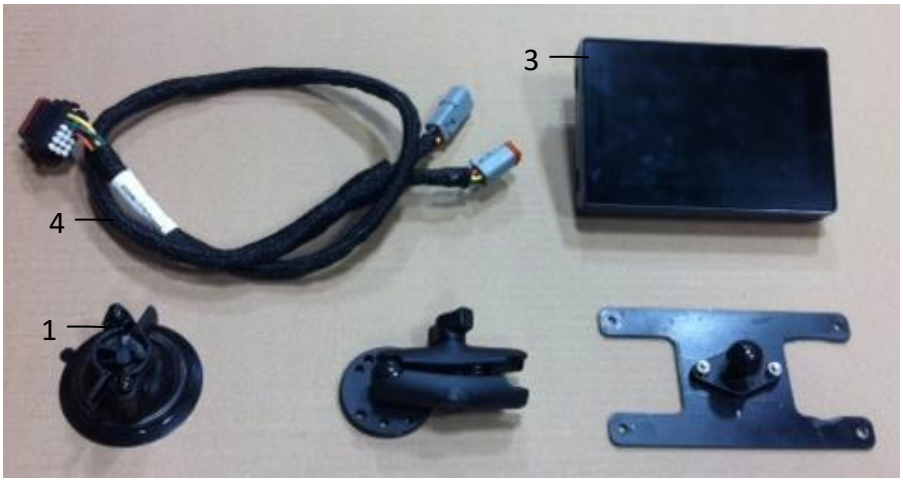

Ref	Description	Part #	Qty
1	Suction Cup Mount	001-2012SCM	1
2	Ram Mount	001-2012H	1
3	Harvest Tec Display	006-765GVT	1
4	Display Harness	006-765GH	1
5	Mounting Plate	001-700GH	1
NP	700 Series Resistor	006-700R	1

Complete HT Display Kit 030-7670DK

Installation Instructions

1. Connect 006-765GH harness connection to 006-765IC tractor harness key power plug.
2. Connect 006-765GH harness to the Harvest Tec VT Display before tightening mount in place.
3. Tighten the mounting and display. Streamline harness as necessary.
4. Once connected, power cycle the system and ensure display is working properly.

NOTE: CANNOT OPERATE APPLICATOR SYSTEM WITH HARVEST TEC DISPLAY AND BALER ISO INTEGRATION or TABLET/ iPad AT THE SAME TIME.

Optional Android Display Kit (030-1670DK)

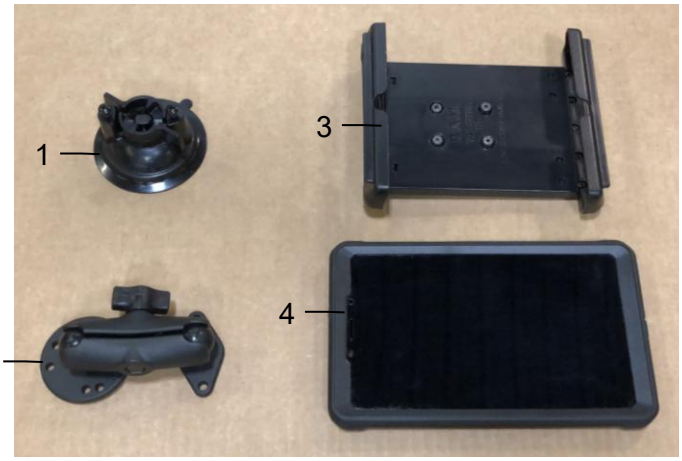

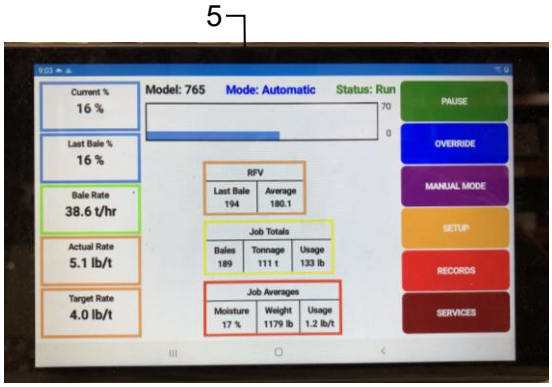

Ref	Description	Part #	Qty
1	Suction Cup Mount	001-2012SCM	1
2	Ram Mount	001-2012H	1
3	Spring Load Cradle	001-2012SLC	1
4	Android Case	001-2012A1	1
5	Android Tablet	006-1670AT	1
NP	USB-C to USB-A Cable	006-6672USBX	1

Complete Android Tablet Display Kit **030-1670DK**

Note: Use a quality communication cable ending with a USB-A connection to connect tablet to (006-765ICM) control module - plug into the USB port showing a tablet.

Optional iPad Display Kit (030-6670DK)

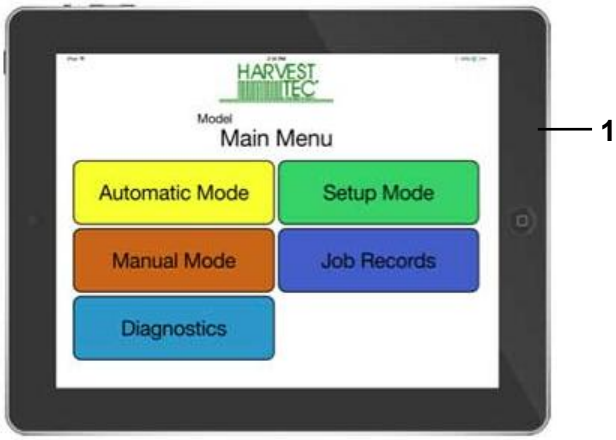

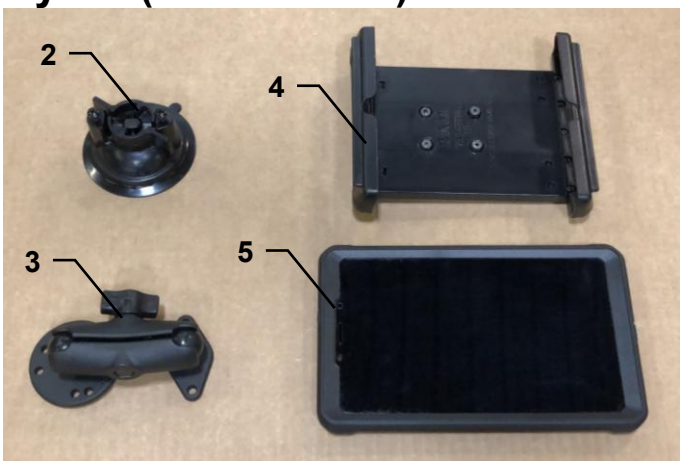

Ref	Description	Part #	Qty
1	iPad Mini 6	006-6670IP	1
2	Suction Cup Mount	001-2012SCM	1
3	Ram Mount	001-2012H	1
4	Spring Load Cradle	001-2012SLC	1
5	iPad Mini 6 Case	001-2012C6	1
NP	Power/Comm. Cable	006-6672USBX	1

Complete iPad Mini Display Kit **030-6670DK**

iPad mini is a trademark of Apple Inc., registered in the U.S. and other countries

Optional ISO Display Adapter Harness (006-7670A or 006-7670F)

For use with a dedicated ISO display

The 700 Series Applicator has the option to tie into compatible dedicated ISO monitors by utilizing the diagnostic port. When connected, the Harvest Tec System will populate as its own object pool within the ISO display. When this object pool is selected, the ISO monitor will then function as a dedicated monitor for the Harvest Tec System.

The Harvest Tec System will function as a stand-alone system when using this adapter.
System will not integrate with the baler ISO system software when using this adapter.

Any tablet connected to the ICM module must be disconnected from the ICM before the Harvest Tec Object Pool screen will activate within the ISO display.
To connect Adapter Harness (006-7670A or 006-7670F), unplug the 4-pin Key Power Plug (006-765CPH) connection from the Tractor Harness (006-765IC) and replace with the plug from the Adapter Harness. Connect the round plug end of the Adapter Harness to the Tractor ISO Display Diagnostic port.

Scan the QR code to view a short video of the Adapter Harness for ISO Display:

For additional product and service information:
See our YouTube Channel https://www.youtube.com/@harvesttec

ISO Diagnostic Port Adapter (006-7670A)

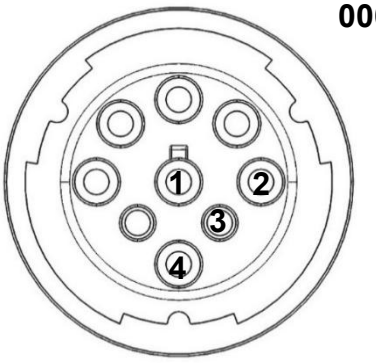

006-7670A connecting plug and pin

Pin 1	Black	Ground
Pin 2	Yellow	CAN High
Pin 3	Green	CAN Low
Pin 4	Red	12V+ Key Power

ISO Diagnostic Port Adapter (006-7670F)

For Newer Fendt and MF Tractors with plug location in the cab ceiling

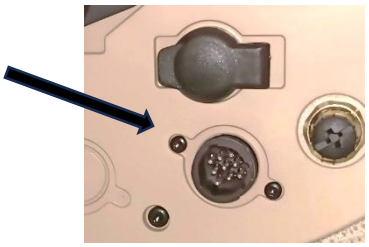

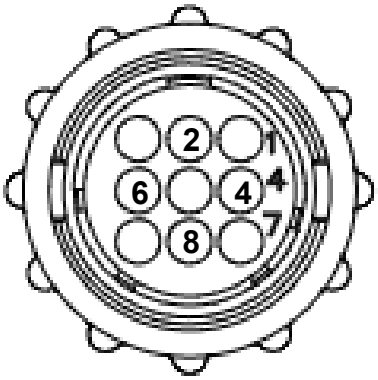

006-7670F connecting plug and pin

Pin 8	Black	Ground
Pin 4	Yellow	CAN High
Pin 2	Green	CAN Low
Pin 6	Red	12V+ Key Power

Optional Crop Eye Forage Indicators
Installation – Massey Ferguson Double Balers

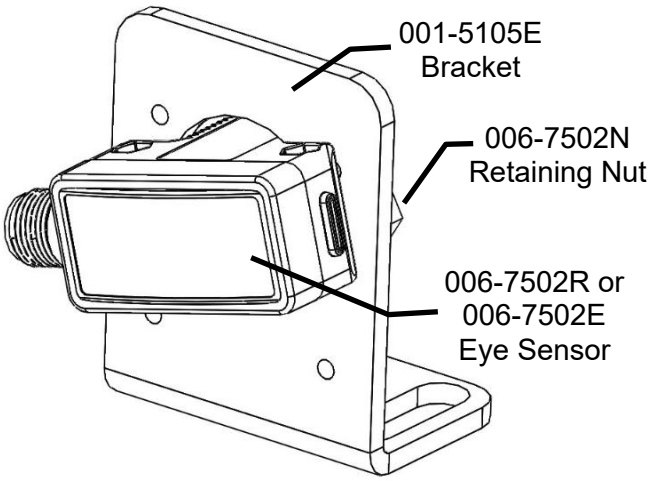

Sensor Placement: Crop eye sensors must be mounted directly across from each other on the baler pickup. Remove one of the existing factory bolts (installer's preference) on each side of the pickup head, place the sensor bracket (001-5105E) and reinstall factory bolt. Drill and tap a second hole to fully secure the sensor bracket. Attach the red Receiver Eye sensor (006-5105R) to the bracket on the RH side of baler with supplied plastic retaining nut. Do not over-tighten retaining nut to eye sensor. Repeat process on the LF side of the pickup for mounting the bracket and green Emitter Eye sensor (006-5105G).

Harness Routing (700 Series Systems): From the LH side of the baler where the wires and hoses are routed forward from the back of the baler, route the green leg of the EOR harness to the green sensor on the LH side of the pickup, and route the red leg of the EOR harness to the red sensor on the RH side of the pickup. Follow existing wires/hoses where possible, securing with cable ties. Avoid pinch points and allow for complete range of motion of pickup head.

From the front LH corner of the baler, route the opposite end of the wire harness (001-7503H) towards the rear of the baler to the 'EOR' connector on main baler harness 006-762B. Secure excess wiring with cable ties.

Harvest Tec 474C Parts Breakdown

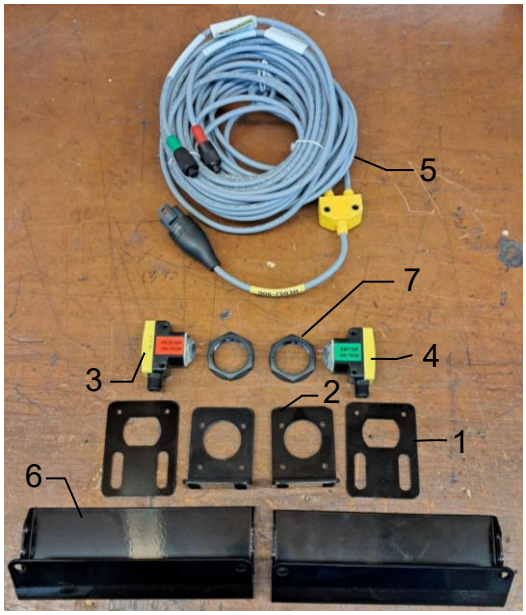

Ref#	Description	Part #	Qty
1	Trash Plate	001-5105S	2
2	Hay Indicator Bracket	001-5105E	2
3	Sensor -Receiver (Red)	006-7502R	1
4	Sensor -Emitter (Green)	006-7502E	1
5	Hay Indicator Harness-Deutsch Plug	006-7503H	1
6	Hay Diverter (used with NH and Case IH SBX only)	001-5105F	2
7	Hay Indicator Retaining Nut (Replacement, included with crop eye)	006-7502N	2

Wiring Diagram – 770 High Capacity Double Baler

1. Connect the power harness (006-765IC) to the tractor battery (12 volt) using the red wire with fuse to the positive side and the black wire to the negative.
   - **A. The power harness must be connected to the battery!**
     CONTACT HARVEST TEC BEFORE MODIFICATIONS.
     The unit will draw more amps than convenience outlets can handle. Any modifications of the power harness will void systems warranty
   - **B. This unit will not function on positive ground tractors.**
   - **C. If the unit loses power while operating it will not keep track of accumulated pounds of product used.**
2. The power harness on the tractor (006-765IC) will run from the tractor battery to the hitch. The power harness on the baler (006-762B) will connect to the tractor power harness (006-765IC) at the hitch.
3. Connect the keyed power wire (006-765CPH) to a keyed power source on the tractor.
   The keyed power wire must connect to a keyed source or the unit will not power up correctly.
4. Attached the ISO Communication Module (006-6673) to the tractor power harness (006-765IC).
5. Attach the End of Bale (EOB) connection on baler harness (006-762B) to the EOB Sensor (006-7401).
6. Attach the Stroke Counter connection on baler harness (006-762B) to the Flake Count Sensor (006-7401).
7. Attach the Solenoid (SOL 1) connection on the baler harness (006-762B) to the solenoid (002-2203F).
8. Attach the Flowmeter (006-4724A) to the port on ISO Pump Module on pump plate assembly.
9. Attach the rubber Molded Connector from ISO Pump Module to the Pump (007-4120DE).
10. Attach Moisture Harness (006-7307EM2) to the port on the ISO Pump Module.
11. Ensure 006-700R Terminator is connected to CAN/IDM port on 006-762B harness.

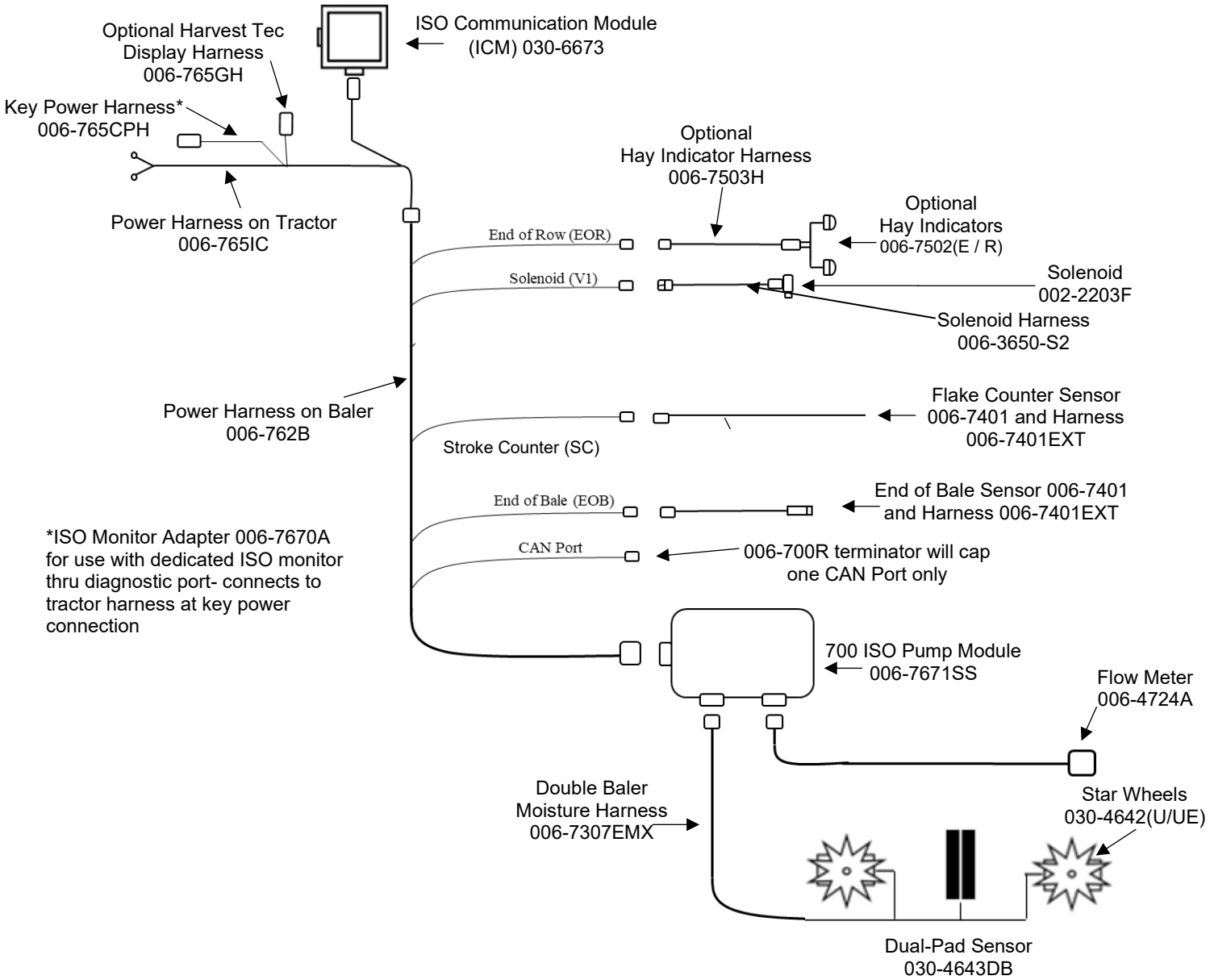

Pin Outs – 700 Small Square Balers

Integrated Control Module (ICM) on Tractor Harness 006-765IC
(Deutsch Plug Number: DTM06-12SA)

Pin 1	Red	+12V from ECU
Pin 2	Purple	Signal Wire
Pin 3	Red/White	+12V CAN X
Pin 4	Black/White	Ground CAN X
Pin 5	Orange	CAN X Hi
Pin 6	Blue	CAN X Lo
Pin 7	Green	ISO CAN Lo
Pin 8	Yellow	ISO CAN Hi
Pin 9	White	GPS Expansion 1
Pin 10	Gray	GPS Expansion 2
Pin 11	Brown	GPS Expansion 3
Pin 12	Black	Ground from ECU

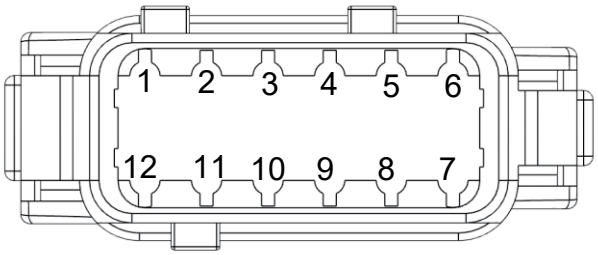

ISOBUS Plug on Tractor Harness 006-765IC
(Deutsch Plug Number: DT04-4P)

Pin 1	Red	+12V from ECU
Pin 2	Yellow	ISO CAN Hi
Pin 3	Green	ISO CAN Lo
Pin 4	Black	Ground from ECU

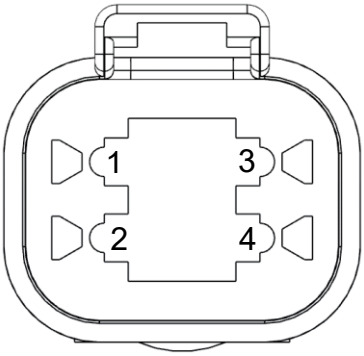

Power / Communication Tractor Harness 006-765IC at Baler Hitch
(Deutsch Plug Number: HDP24-24-18PN)

Pin 1	Not Used	----
Pin 2	Yellow	ISO CAN Hi
Pin 3	Green	ISO CAN Lo
Pin 4	Red	+12V Power to ECU
Pin 5	Black	Ground to ECU
Pin 6	Red	+12V From Battery
Pin 7	Not Used	----
Pin 8	Black	Ground From Battery
Pin 9	Not Used	----
Pin 10	Purple	Signal Wire
Pin 11	Red/White	+12V CAN X
Pin 12	Black/White	Ground CAN X
Pin 13	Orange	CAN X Hi
Pin 14	Blue	CAN X Lo
Pin 15	White	GPS Expansion 1
Pin 16	Gray	GPS Expansion 2
Pin 17	Brown	GPS Expainsion 3
Pin 18	Not Used	----

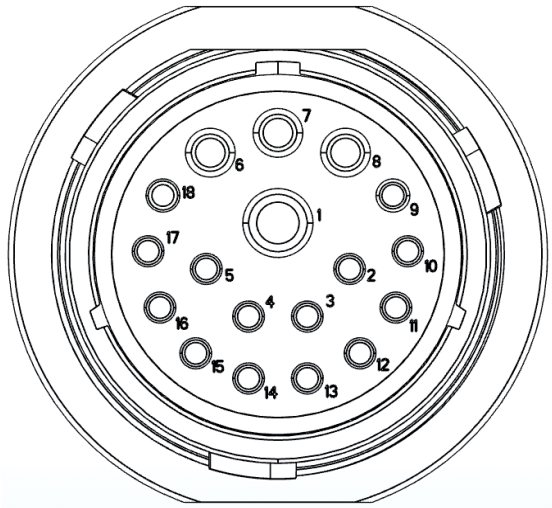

Pin Outs (continued)

Power / Communication Baler Harness 006-762B at Baler Hitch IPM
(Deutsch Plug Number: HDP26-24-18SN)

Pin 1	Not Used	----
Pin 2	Yellow	ISO CAN Hi
Pin 3	Green	ISO CAN Lo
Pin 4	Red	+12V Power to ECU
Pin 5	Black	Ground to ECU
Pin 6	Red	+12V From Battery
Pin 7	Not Used	----
Pin 8	Black	Ground From Battery
Pin 9	Not Used	----
Pin 10	Orange/White	+12V Power to EOR
Pin 11	Not Used	----
Pin 12	Not Used	----
Pin 13	Not Used	----
Pin 14	Not Used	----
Pin 15	Not Used	----
Pin 16	Not Used	----
Pin 17	Not Used	----
Pin 18	Not Used	----

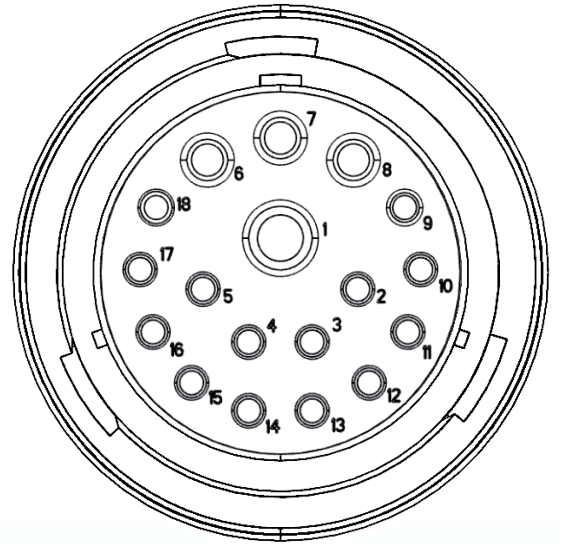

Power / Communication Baler Harness 006-762B at IPM Module
(Deutsch Plug Number: HDP24-24-18SN)

Pin 1	Not Used	----
Pin 2	Yellow	ISO CAN Hi
Pin 3	Green	ISO CAN Lo
Pin 4	Red	+12V Power to ECU
Pin 5	Black	Ground to ECU
Pin 6	Red	+12V From Battery
Pin 7	Not Used	----
Pin 8	Black	Ground From Battery
Pin 9	Not Used	----
Pin 10	Orange/White	+12V Power to EOR
Pin 11	Orange/Black	Ground to EOR
Pin 12	Purple/Green	EOR Signal
Pin 13	Blue/White	EOB Signal
Pin 14	Gray/Red	+12V Power to Solenoid 1
Pin 15	White/Black	Ground to Solenoid 1
Pin 16	Orange/Red	+12V Power to Solenoid 2
Pin 17	White/Black	Ground to Solenoid 2
Pin 18	Not Used	----

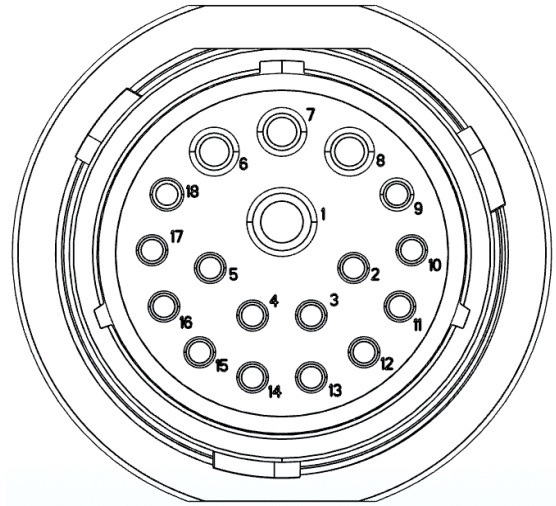

*IPM Module Whip Plug- Pin # 5 Not Used

Solenoid 1 Plug on Baler Harness 006-762B
(Deutsch Plug Number: APTIV 12052641)

Pin B	Gray/Red	+12V to Solenoid 1
Pin A	White/Black	Ground to Solenoid 1

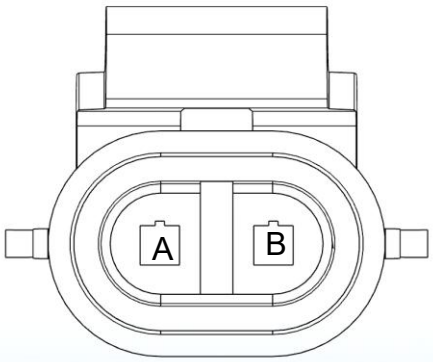

Pin Outs (continued)

CAN / IDM on Baler Harness 006-762B
(Deutsch Plug Number: DT06-4S)

Pin 1	Red	+12V to Solenoid 2
Pin 2	Yellow	ISO CAN Hi
Pin 3	Green	ISO CAN Lo
Pin 4	Black	Ground to Solenoid 2

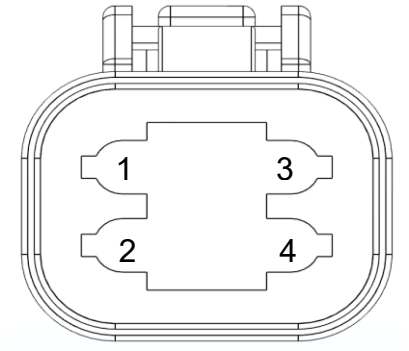

End of Bale (EOB) Sensor Plug on Baler Harness 006-762B
(Deutsch Plug Number: DT06-3S)

Pin 1	Orange/White	+12V to End of Bale Sensors
Pin 2	Orange/Black	Ground to End of Bale Sensors
Pin 3	Blue/White	Signal

Flake/Stroke Counter Sensor Plug on Baler Harness 006-762B
(Deutsch Plug Number: DT06-3S)

Pin 1	Orange/White	+12V to End of Bale Sensors
Pin 2	Orange/Black	Ground to End of Bale Sensors
Pin 3	Blue/White	Signal

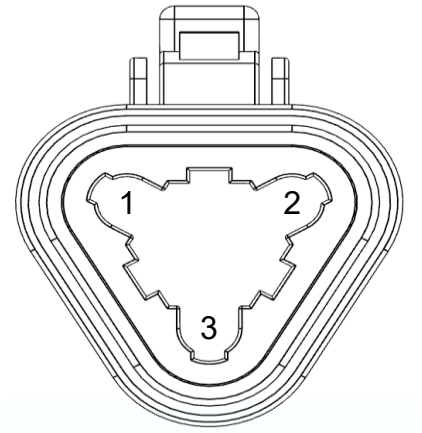

End of Row (EOR) Sensors Plug on Baler Harness 006-762B
(Deutsch Plug Number: DT06-3S)

Pin 1	Orange/White	+12V to End of Bale Sensors
Pin 2	Orange/Black	Ground to End of Bale Sensors
Pin 3	Blue/White	Signal

Pump Connection on 700 Controller Harness
(16 AWG Two-Wire Plug)

Pin 1	Red	Power to Pump
Pin 2	Black	Ground to Pump

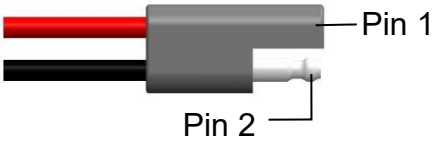

Harvest Tec LLC. Warranty and Liability Agreement

Harvest Tec, LLC. will repair or replace components that are found to be defective within 12 months from the date of manufacture. Under no circumstances does this warranty cover any components which in the opinion of Harvest Tec, LLC. have been subjected to negligent use, misuse, alteration, accident, or if repairs have been made with parts other than those manufactured and obtainable from Harvest Tec, LLC.

Our obligation under this warranty is limited to repairing or replacing free of charge to the original purchaser any part that in our judgment shows evidence of defective or improper workmanship, provided the part is returned to Harvest Tec, LLC. within 30 days of the failure. If it is determined that a non-Harvest Tec manufactured product has been used inside the Harvest Tec applicator system where the failure occurred, then Harvest Tec reserves the right to deny the warranty request at their discretion. Parts must be returned through the selling dealer and distributor, transportation charges prepaid.

This warranty shall not be interpreted to render Harvest Tec, LLC. liable for injury or damages of any kind, direct, consequential, or contingent, to persons or property. Furthermore, this warranty does not extend to loss of crop, losses caused by delays or any expense prospective profits or for any other reason. Harvest Tec, LLC. shall not be liable for any recovery greater in amount than the cost or repair of defects in workmanship.

There are no warranties, either expressed or implied, of merchantability or fitness for particular purpose intended or fitness for any other reason. This warranty cannot guarantee that existing conditions beyond the control of Harvest Tec, LLC. will not affect our ability to obtain materials or manufacture necessary replacement parts.

Harvest Tec, LLC. reserves the right to make design changes, improve design, or change specifications, at any time without any contingent obligation to purchasers of machines and parts previously sold.

Revised 1/24

HARVEST TEC, LLC.
P.O. BOX 63
2821 HARVEY STREET
HUDSON, WI 54016 USA
PHONE: 715-386-9100
FAX: 715-381-1792
Email: info@harvesttec.com