Installation Manual

Model 768

75 gallon Automatic Preservative Applicator
For Marcrest High-Capacity SS Balers

HarvestTec®

EST. 1976

768-26-INST
9/26

Table of Contents

	Page
Introduction, Model Reference, & Tools Needed	**3**
Tank Mounting	**4-8**
Tank Saddle Kit Breakdown	4
Installation	5
Drain Fill Kit and Tank Plumbing	6
Parts Bags and Hosing	6
Pump Plate Assembly	7-8
Mounting Control Box	7
Pump Plate Breakdown	8
Spray Shield Assembly	**9**
Plumbing and Solenoid	**10-11**
Solenoid Breakdown	11
Star Moisture Sensors	**12-13**
Star Wheel Breakdown and Moisture Harness	12
Installation	13
End of Bale Sensor (EOB)	**14**
Flake/Stroke Count Sensor	**15**
Main Wire Harness and Connections	**16**
Main Control Modules and Harnesses Breakdown	16
Tractor Set Up	**17**
Display Options	**18-21**
Optional HT VT Display Kit	19
Optional Android Tablet Kit	20
Optional iPad Mini Display Kit	20
Optional ISC Display Adapter	21
Optional Crop Eye Forage Indicators	**22**
Crop Eye Breakdown	22
Wire Diagram	**23**
Pin Outs	**24-26**
Warranty Statement	**27**

Introduction

Read this manual carefully to ensure correct steps are done to attach the applicator to the baler. This applicator is designed to apply Harvest Tec buffered propionic acid. Use of alternative products may cause complications and voids warranty. Complications may include inaccurate readings from the flow meter and damage to system components.

Harvest Tec applicators can be installed on many baler models when using the proper tank model number and installation kit. Before installing on your baler, make sure you have the proper model & installation kit (chart below). Contact your local authorized dealer for specifications if you are unsure about your installation kit.

Left and Right sides are determined by facing in the direction of forward travel.

Model Kit Reference – for High-Capacity / Double Small Square Balers

Automatic Applicator Systems

Baler Make	Baler Model	Model Number	Installation Kit	Tank Size
Grady TwinPak	SB2XR	767	4552C	55 Gallon
Kubota	SSB2014, SSB2012	732	4554C	55 Gallon
Marcrest	210 Baler	768	4553C	75 Gallon
Massey Ferguson	1436 Double Baler	770	4556C	75 Gallon

Tools Needed

Standard wrench and socket set
Hose cutter
Metal drilling and cutting tools
Straight edge
Standard screwdriver set
Crescent wrench
Tape measure
Side cutter
Hammer
Center punch

Parts Breakdown - Model 768, 468 Base Kits
Tank Saddle Kit 030-0468-TK

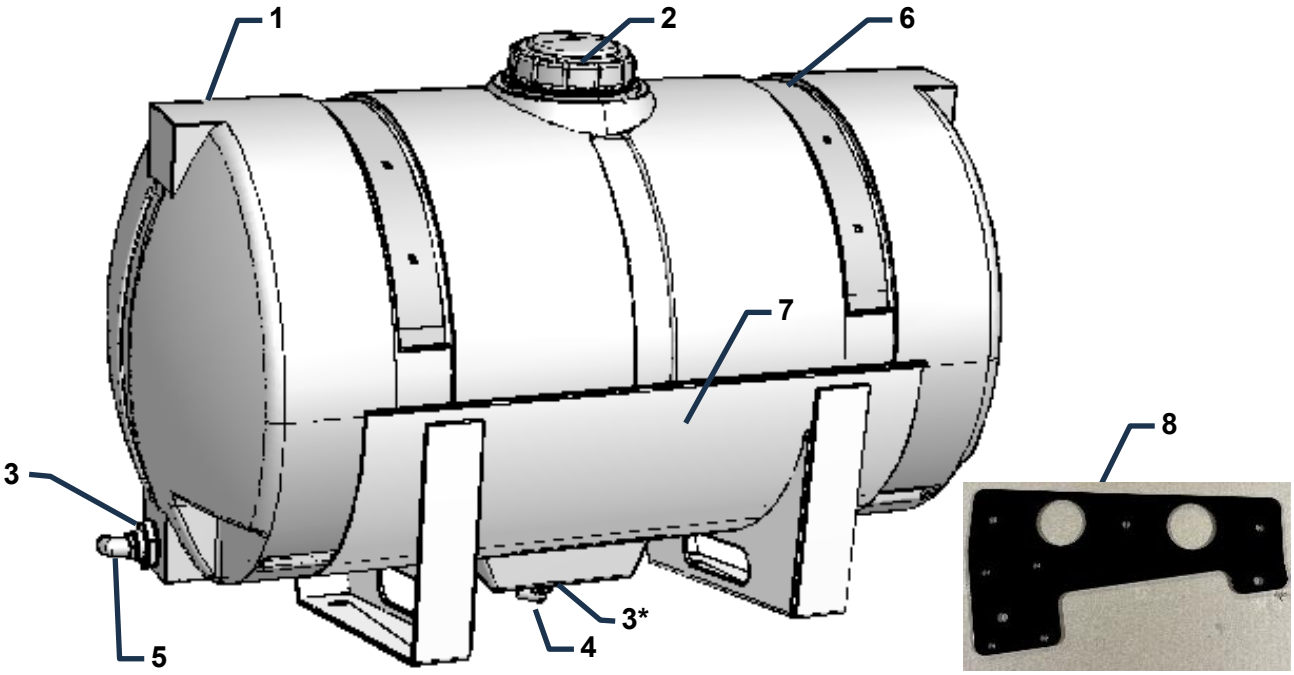

Ref#	Description	Part #	Qty
1	Tank - 75 gal.	005-9207	1
2	Tank Lid	005-9022C	1
NP	Lid Breather (replacement)	005-9022B5	1
NP	Lid Gasket (replacement)	005-9022CG	1
3	Tank Fitting* (replacement)	005-9100	2
4	Elbow 3/4MPTx1/2HB (replacement)	003-EL3412	1
5	Elbow 3/4MPTx3/4HB (replacement)	003-EL3434	1

Ref#	Description	Part #	Qty
6	Tank Strap	001-4402M	2
7	Tank Saddle	001-4445M	1
8	Pump Mount Plate	001-4445MP	1

Replacement Tank 005-9207
(Inc. bottom tank fitting only)
*Contact HT for replacement tank fitting for tanks prior to 2027; these tanks had larger diameter bottom tank opening

Complete Tank Saddle Kit 030-0470-TK

Tank Saddle Kit (030-0468-TK)

Installation – Tank Mounting

Tank Saddle Kit comes with the tank secured to the tank saddle. Recommended to use an overhead lift or multiple persons to safely place and secure the tank saddle kit onto the baler.

Locate the factory C-channel rails (see arrows) on the top of the chamber, to mount Tank Saddle (001-4445M). Use 4x 1/2-13 x 1-1/2” hex bolt, flat washer, lock washer, and ½-13 nut to attach the tank saddle to the baler frame. Orient side tank fitting towards the RH side of the baler. Center the saddle side to side and tighten hardware.

Install the 1/2” elbow fitting (003-EL3412) into the bottom tank fitting on the tank and tighten, orientating towards right-hand side of baler. Install the 3/4” elbow (003-EL3434) into the side tank fitting on the tank, orientating towards the rear of the baler.

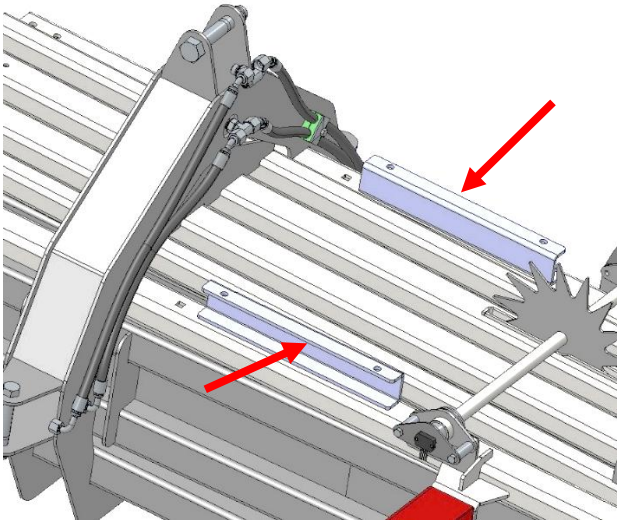

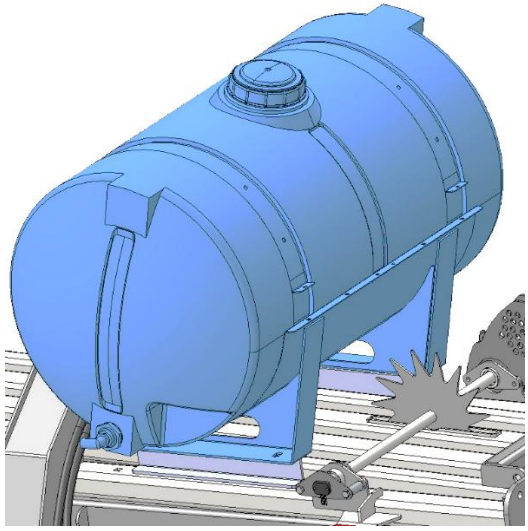

Drain Fill Kit and Hoses

Installation - Drain Fill Kit (030-0493DFK)

Locate Parts Bag 1 and secure the drain/fill bracket and valve assembly to the side of the baler in an area where it will be accessible and not interfere with the operation of the baler (circled).
Route the ¾" hose from the elbow at the rear of the tank to the fitting at the top of the drain/fill assembly, secure with hose clamps on each end.
Secure hoses so they will not interfere with moving parts, avoiding points where the hose may pinch or rub.

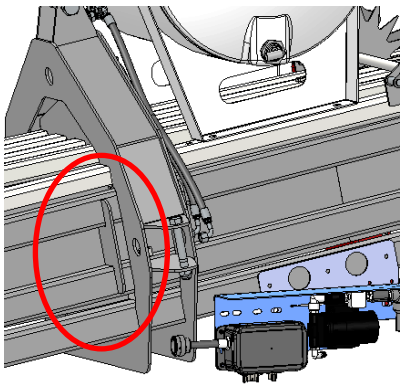

Tank Plumbing – Tank to Pump

The 1/2" hose will attach from the elbow at the bottom of the tank to the inlet side of the ball valve on the pump plate/filter assembly and be secured with hose clamps on each end. Route and secure hose so it will not interfere with moving parts, avoiding points where the hose may pinch or rub.

Drain Fill Line, Parts Bag Packages and Hosing

PBA-1

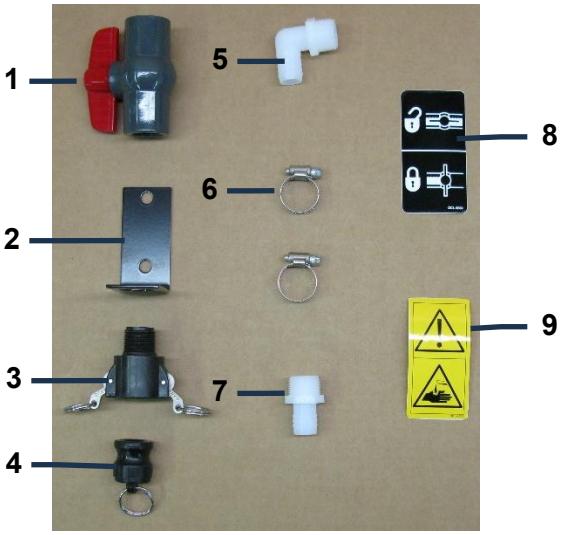

PBP-16

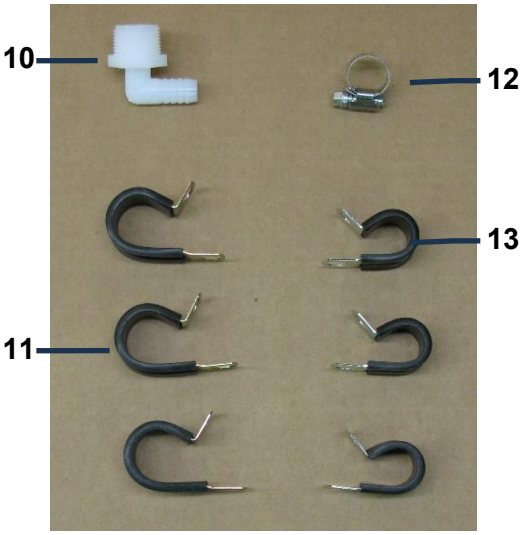

Ref	Description	Part #	Qty
1	3/4" Ball Valve	002-2200	1
2	Valve Holder	001-6702H	1
3	Female Coupler	002-2204A	1
4	Male Shut-Off Plug	002-2205G	1
5	3/4" x 3/4" Elbow	003-EL3434	1
6	#10 Hose Clamp	003-9004	2
7	3/4" x 3/4" Straight Fitting	003-A3434	1

Complete Drain Fill Kit **030-0493DFK**
(Includes 3/4" Hose Not Pictured)

Ref	Description	Part #	Qty
8	Valve Decal	DCL-8004	1
9	Hazard Decal	DCL-8001	1
10	3/4" x 1/2" Elbow	003-EL3412	1
11	3/4" Jiffy Clip	008-9010	3
12	#6 Hose Clamp	003-9003	1
13	Small Jiffy Clip	008-9009	3

Hoses

NP	1/2" EVA Tubing (Pump to Tips)	002-9001	20 ft
NP	3/4" EVA Tubing (Drain/Fill Line)	002-9002	6 ft

Pump Plate Assembly (PMP-7636P)
Using Pump Plate Mount (001-4445MP)

Installation
Pump Plate Mount Bracket (001-4445MP) is mounted to the RH side of the bale chamber. Locate the bottom RH tube on the side of the bale chamber. Align the top of the pump plate adapter bracket flush with the top edge of the bale chamber tube. Space the front edge of the bracket 6" rearward of the shield support bracket (see arrow). Locate the three 3/8" holes in the pump plate adapter bracket and mark the center of each hole. Use a 9/32" drill bit to drill 3 holes into the tube. Use the 5/16-18 x 1-1/4" thread cutting bolts to tap each hole. Remove the bolts, align the pump plate adapter bracket, and secure the bracket to the tube with the 3 bolts.

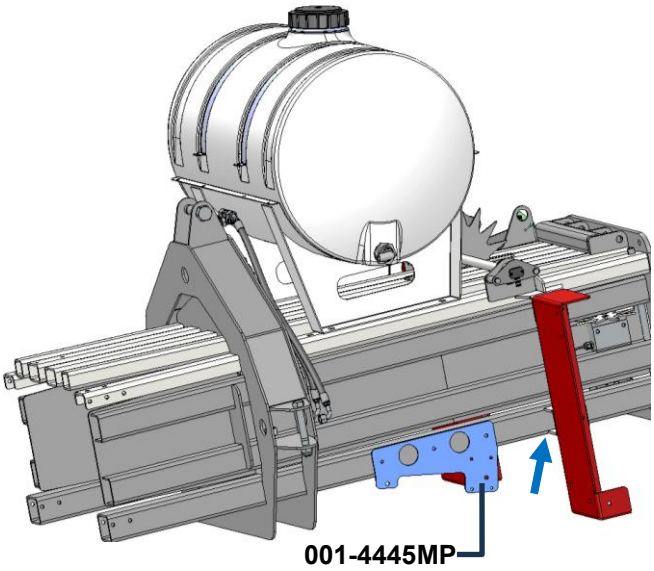

Pump Plate Mounting - 768 Auto Systems Only
Pump Plate Assembly (PMP-7636P) will attach to the front side of mounting bracket (001-4445MP) using the lower set of holes, aligning the slots of the pump plate with the 7/16" holes in the mounting bracket. Center pump plate assembly and secure using 2x 3/8-16x1-1/4" flange head bolt and 3/18-16" flange nut supplied hardware.

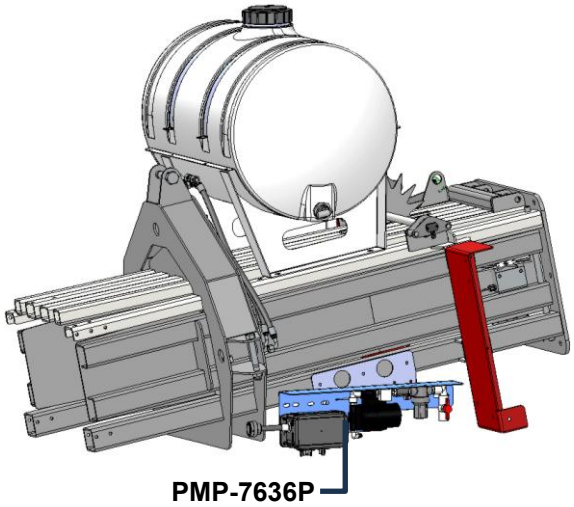

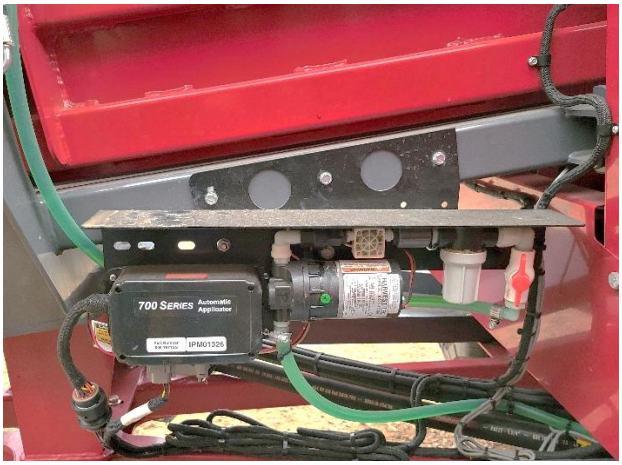

Control Box
Mounting to Pump Plate
Locate the 700 series IPM Control box (006-7671SS) from the controls package box. Mount the IPM Control to the pump plate shield (001-4648X) by using hardware included in the controls package box. The IPM Control box will mount on the pump plate. Pump plate assembly attaches to pump plate mounting bracket with hardware supplied within the pump plate box.
Triangle Flow Meter plug attaches to plug on bottom of IPM.
Moisture Sensor harness also attaches to bottom of IPM module.

Parts Breakdown for Pump Assembly

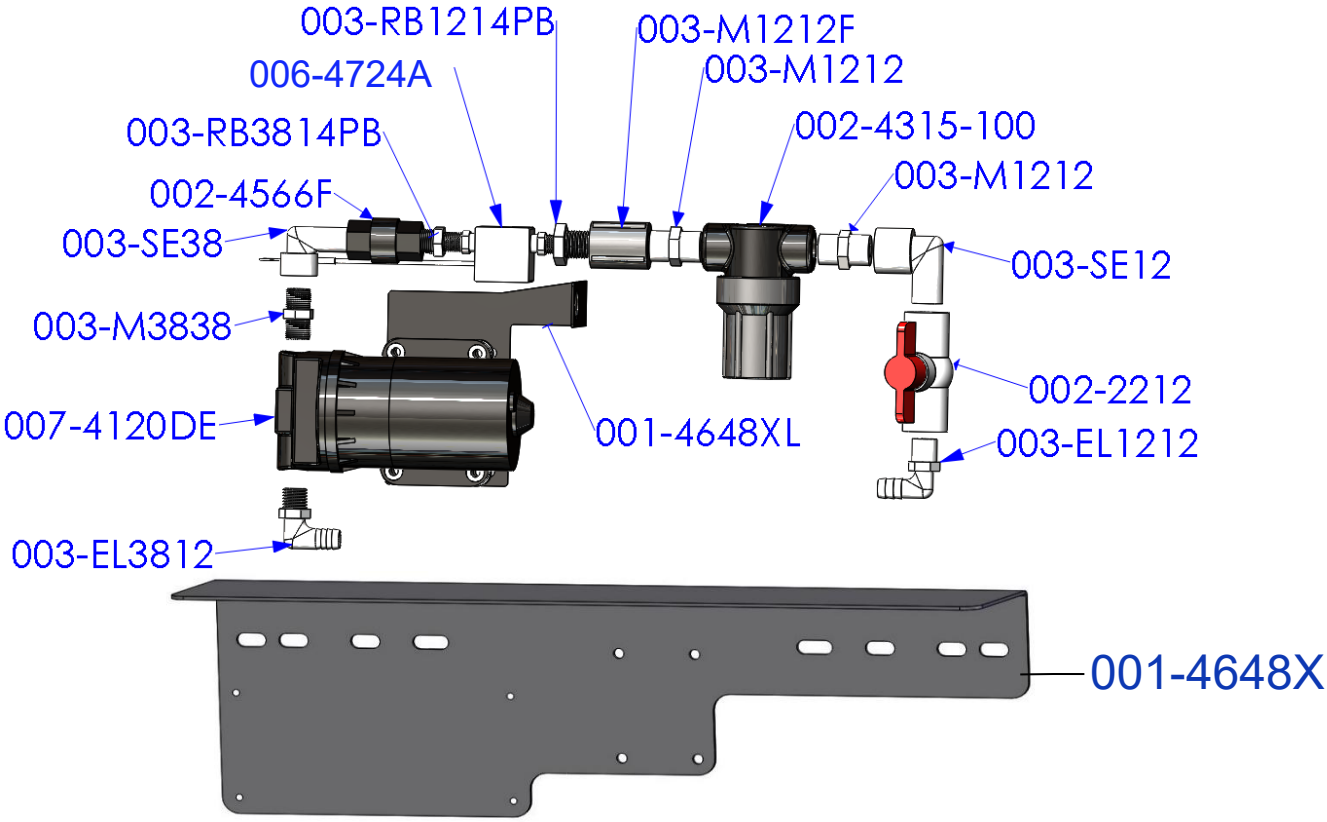

Part#	Description	Qty	Part#	Description	Qty
003-EL3812	3/8”MPT X 1/2"HB Elbow	1	003-M1212	1/2" Union	2
007-4120DE	700/300 Series Pump	1	002-4315-100	1/2" Line Strainer-100 Mesh	1
003-M3838	3/8” x 3/8” Union	1	003-SE12	1/2" Street Elbow	1
003-SE38	3/8” Street Elbow	1	002-2212	1/2" Ball Valve	1
002-4566F	3/8” Check Valve	1	003-EL1212	1/2"MPT x 1/2"HB	1
003-RB3814PB	RB 3/8” x 1/4” Reducer	1	001-4648XL	300 Pump Support	1
006-4724A	Flow Meter-Deutsch Plug	1	001-4648X	Pump Plate Mount	1
003-RB1214PB	RB 1/2" x 1/4" Reducer	1	003-A1212*	1/2" MPTx1/2”HB(Not Pictured)	1
003-M1212F	1/2" Coupler	1	003-A3812*	3/8" MPTx1/2”HB(Not Pictured)	1

*Note: Due to alternative baler designs, elbow 003-EL3812 can be replaced by straight fitting 003-A3812. Elbow 003-EL1212 can also be replaced by straight fitting 003-A1212. Both straight fittings are included.

Filter Bowl Replacement Parts

002-4315F	Filter Bowl
002-4315D	Filter Bowl Gasket
002-4315A	Replacement Screen-100 Mesh
002-4315B	Replacement Screen- 80 Mesh

Pump Plate Mounting – 768 Kits Only

001-4445MP	Pump Plate Mount Bracket

Completed Assembly – PMP-7636P

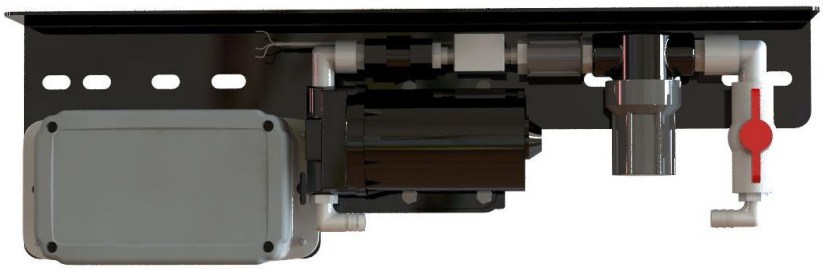

Spray Shield - Installation Kit 4553C

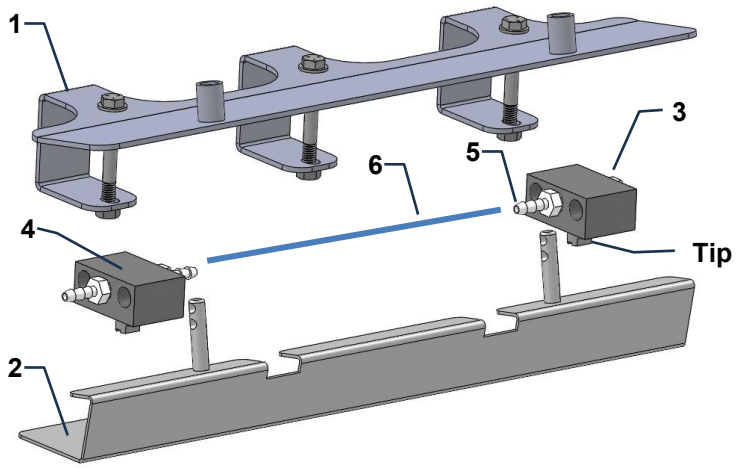

Ref	Description	Part #	Qty	Ref	Description	Part #	Qty
1	Shield Holder	001-4445M	1	NP	Tip* -Low	004-T8001-PT	2
2	Spray Shield	001-4435NSX	1	NP	Tip* -Standard	004-T8004-Pt	2
3	1/4” Hex Plug	003-F14	1				
4	Spray Manifold	001-4435NSB	2	NP	Lynch Pin	008-4576	2
5	1/4MPT x 1/4HB	003-A1414	3				
6	1/4" EVA Hose	002-9016	6 ft				
NP	Hose Clamp	003-9002	3		*Tip color subject to change		

Complete Assembly **030-4553C**

Spray Shield Mounting – Automatic or Electronic

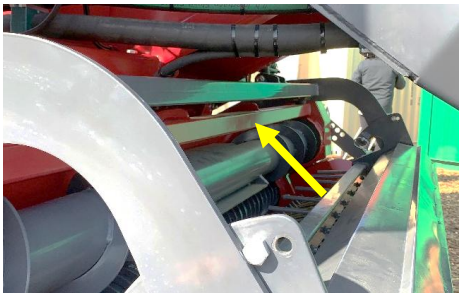

Locate the tube connecting the two sides of the roller wind guard (see arrow) on balers pickup head. Hook Spray Shield Holder (001-4435M) around the back side of the tube and center on the tube. Secure to baler using supplied 3x 5/16-18 x 3” bolts and flat washer from the top side, and 5/16-18 flange nuts on the bottom side. Note, flange with pipes welded on top (**A**) should be towards the front of the baler.

Attach Spray Shield Assembly (001-4435NSX) by inserting the pins with the tubes on the holder and secure in place using the two lynch pins (008-4576). Route the spray shield hosing towards the RH side of the baler, avoiding interference with moving parts, and secure with cable ties so the hoses will not be pinched or rubbed.

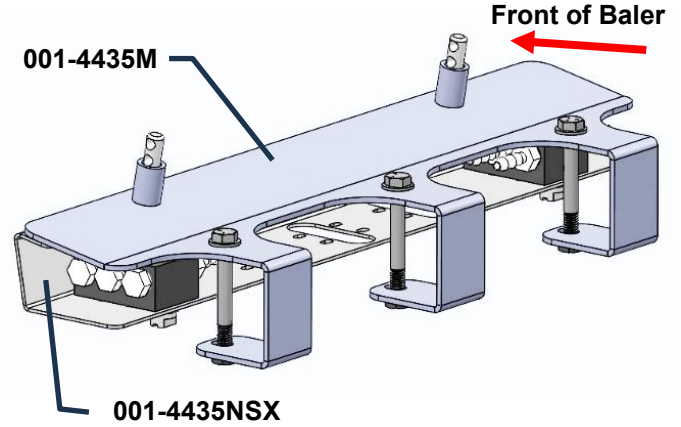

Plumbing and Solenoid

A. Intake Line

Locate parts bag 16. Use the 003-EL3412 on the bottom of the tank to route 1/2" line (002-9001) to the fitting (003-A1212 or 003-EL1212) used on the ball valve attached to the pump plate. Attach hose clamps (003-9003) on both of the fittings.

B. Discharge Line

Connect and route the 1/2" hose from the pump output along the existing wiring/hose bundle that follows the bottom of the baler frame along the RH side, toward the front of the baler to connect to the solenoid assembly (SOL-3SP-A). Secure using cable ties.

C. Solenoid Assembly Installation

The Pulsing Solenoid is installed at the transition from the 1/2" hosing from the pump discharge line and the 1/4" line to supply the spray nozzles. Transition should be close to the spray tips in an accessible location. The best suited placement for this transition is a location where the solenoid can be placed in a horizontal position in-line with the hoses and clear of the pickup and any moving parts. This location is to be determined at the discretion of the installer. (See example). Be sure to provide ample hose length to allow for full range of motion of the pickup head- too short of hose may cause hosing to pull out or break connections when pickup head is lowered.

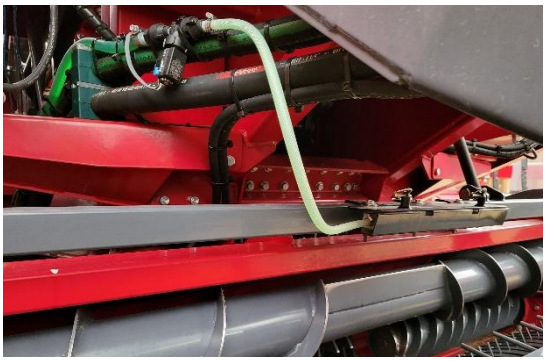

Attach straight fitting (003-A1412) into end of 1/2" hose from the pump and secure with hose clamp (003-9003). Thread connector (004-1207G) onto fitting and place rubber washer (004-1207W) into quick disconnect (004-1207H). Connect to inlet side to the solenoid valve body (004-1207VF). Attach quick disconnect from spray nozzles/shield to outlet side of solenoid valve body, with rubber washer inside the quick disconnect.

Attach Solenoid Harness to Solenoid and route harness to connect with main baler harness at only one of the plugs marked 'SOL1'. Secure harness to baler away from any moving parts and pinch points using cable ties.

D. Solenoid Maintenance

Check before use for any cracks or leaks in fittings- replace as necessary. The center section of valve body may need to be cleaned if solenoid does not pulsate when power is supplied by applicator. See breakdown for cleaning instructions. Components are compatible with Harvest Tec Buffered Propionic Preservative and use of other products may cause an increased need for service or replacement.

E. Standard and Low Output Tips

Your baler comes with the Standard tip set installed.

-Low tip set is recommended for use with low baling rates or light baling conditions.
-Standard set will cover most field baling conditions

700 Pulsing Solenoid Breakdown – Small & Round Balers

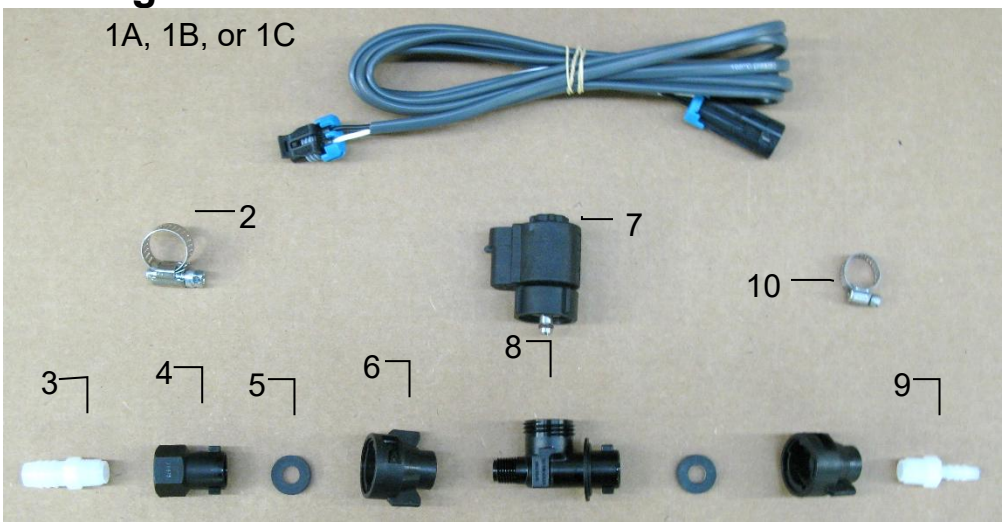

Ref	Description	Part #	Qty
1A	Solenoid Harness (5’)	006-3650-S1	
1B	Solenoid Harness (10’)	006-3650-S2	
1C	Solenoid Harness (15’)	006-3650-S3	
2	#6 Hose Clamp	003-9003	1
3	1/4"x1/2" Straight Fitting	003-A1412	1
4	1/4" Female Connector	004-1207G	1
5	Rubber Washer	004-1207W	2

Ref	Description	Part #	Qty
6	1/4" Female Disconnect	004-1207H	2
7	Solenoid	002-2203F	1
8	Solenoid Valve Body	004-1207VF	1
9	1/4" x 1/4" Straight Fitting	003-A1414	1
10	Mini Hose Clamp	003-9002	1

Solenoid Packages

Complete Assembly Pkg. A	SOL-3SP-A
Complete Assembly Pkg. B	SOL-3SP-B
Complete Assembly Pkg. C	SOL-3SP-C

Expanded View of Pulsing Solenoid (002-2203F)

Replacement Pulsing Solenoid O-Ring Kit available (002-2203FG)
(Includes EPDM O-Rings 6, 8, 9 shown below)

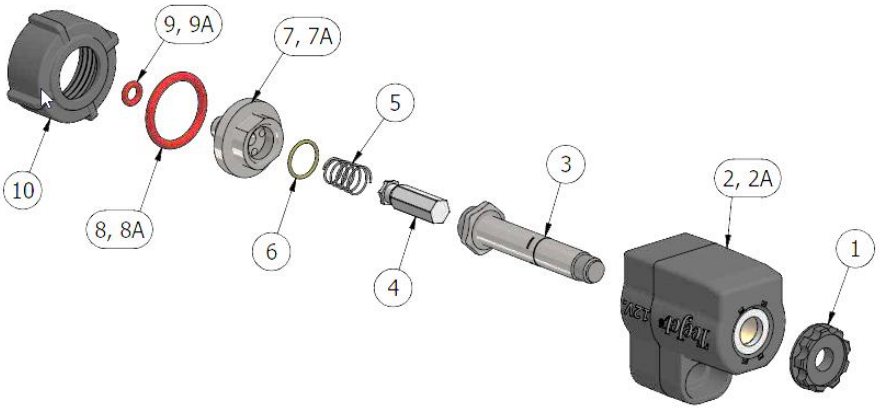

To Clean Solenoid Valves:
The Center Section can be removed from Housing #2 by loosening #1 from #3. Once removed, use wrenches on components #3 and #7 and gently turn to loosen and separate. Soak parts #3-10 in warm soapy water, clean with a soft bristle brush, rinse with clean water to remove buildup before reassembly.

Star Wheel Sensors (030-4642U/UE)
700 Series Small Square Systems – Reinforced Yellow Block 2026

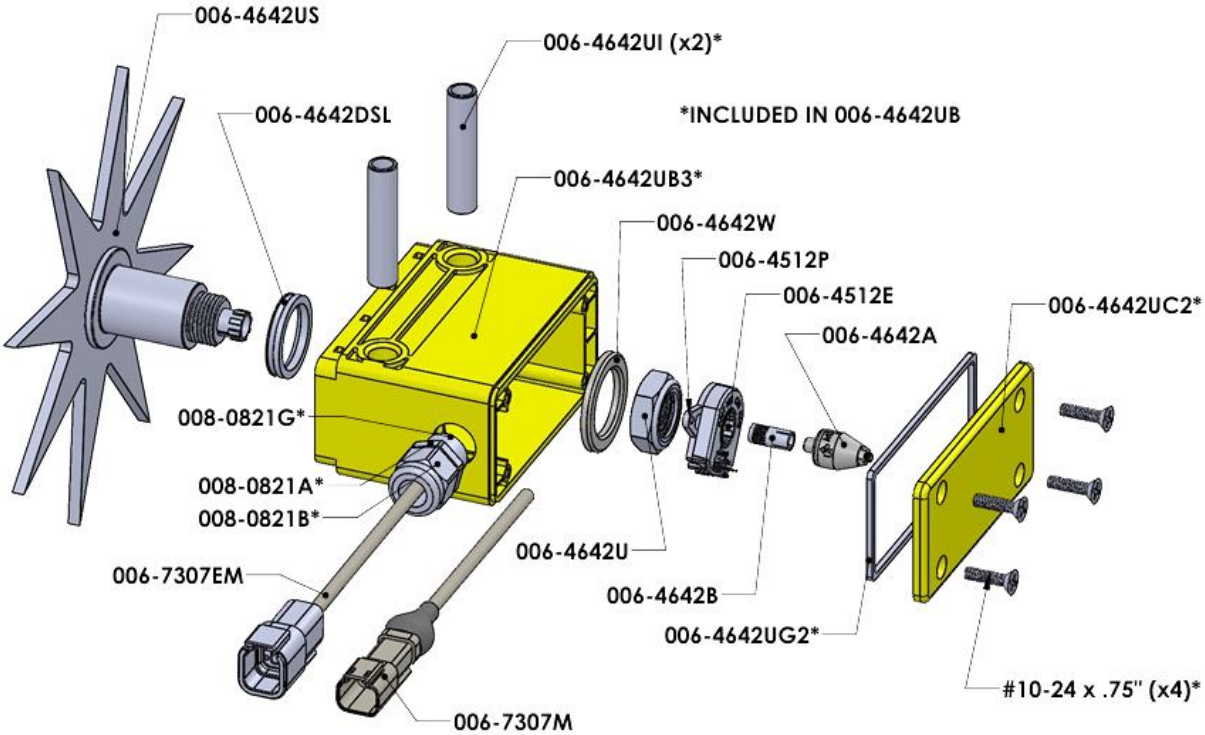

Description	Part#	Qty
Star Wheel (includes swivel insert)	006-4642US	1
Dust Seal Gasket	006-4642UG	1
Star Wheel Block Only	006-4642UB3	1
Star Wheel Block End Cap	006-4642UEC	1
Block Inserts	006-4642UI	2
Wire Compression Grommet	008-0821A	1
Grommet Locking Nut (internal)	008-0821B	1
Washer for Wire Grommet	008-0821G	1
Bearing Washer	006-4642W	1
Star Wheel Nut	006-4642U	1
Encoder Mount (030-4642UE only)	006-4512P	1
Encoder (030-4642UE only)	006-4512E	1
Swivel Insert	006-4642B	1
Electric Swivel	006-4642A	1
Star Wheel Block Gasket	006-4642UG2	1
Star Wheel Block Cover	006-4542UC2	1

Description	Part#	Qty
Encoder Harness Plug (6 Pin) (030-4642UE only)	006-7307EM	1
Moisture Harness Plug (2 Pin) (030-4642U only)	006-7307M	1
Star Wheel Spacer Plate (not pictured)	001-6707ES	1
Star Wheel Mounting Hardware (5/16" x 3-1/4" Allen Head Screws, nuts, locks and washers)		2

Optional Star Wheel Accessories:

Twine Guard -Left	001-4645H
Twine Guard -Right	001-4644H
Star Wheel Drilling Template	001-4642T
Replacement Star Wheel Block*	001-4642UB
Complete Non-Encoder Star Wheel	**030-4642U**
Complete Encoder Star Wheel	**030-4642UE**

Moisture Harnesses

Description	Part #
Moisture Wire Harness (12' & 13' Length Sections)	006-7307EM2
Moisture Wire Harness (16' & 17.5' Length Sections)	006-7307EM3
MF DB Moisture Harness (for 3 Sensor Connections)	006-7307EMX
Kubota DB Moisture Harness (for 4 sensor connections)	006-7307EMK

<u>Moisture Sensor Kit</u> – (MSH-7SS-A)
Installation – 768 Applicator Kit

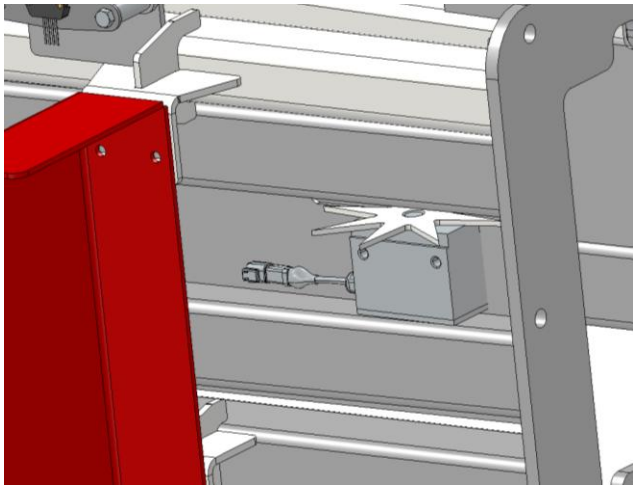

Marcrest balers come with factory star wheel mounting holes and cutouts on each side of the bale chamber. These cutouts can be found at the front of the bale chamber, on both the left and right sides.

Install each of the star wheel assemblies using Star Wheel Spacer Plate (001-6707ES) placed between each star wheel block and the baler for each bale chamber. Secure star wheels and spacer plates with supplied hardware 2x 5/16x3-1/4" BHCS, 5/16" lock washer, and nut. Hand tighten with wrench or ratchet - not exceed 13 ft-lb torque. **<u>DO NOT USE AN IMPACT TO TIGHTEN.</u>** Over torquing star wheel mounting hardware can cause pre-mature wear of the star wheel blocks.

Locate the Encoder Star Wheel (030-4642UE) with the 6-pin connector plug, and mount to the RH side of the bale chamber. This star wheel **<u>MUST</u>** be mounted with the star rotating clockwise as bales pass through in the chamber. Insert BHCS bolts from inside the bale chamber, through star wheel block and spacer plate, then secure with 2x 5/16" lock washer and 2x 5/16-18 nut.

Locate the Non-Encoder Star Wheel (030-4642U) with the 2-pin connector, and mount to the LH side of the bale chamber using supplied 5/16-18x3" BHCS inserted from inside the bale chamber, through star wheel block and spacer plate, then securing with 2x 5/16" lock washer and 2x 5/16-18 nut.

Ensure the block are mounted squarely to the bale chamber to prevent side loading the star wheels assemblies.

Moisture Harness (006-7307EM2)

Connect Moisture/Encoder Harness (006-7307EM2) to the port on the IPM Control mounted on the back side of the tank assembly (on pump plate).

Route moisture harness along baler frame towards star wheels. Connect the 6-pin harness plug wire to the Encoder Star Wheel Assembly on the RH side of the bale chamber, and the 2-pin harness plug wire to the Non-Encoder Star Wheel assembly on the LH side of the bale chamber.

Secure harness to baler away from moving parts and pinch points using cable ties.

End of Bale (Flake/Stroke) Sensor Kit
EOB-7SS-M

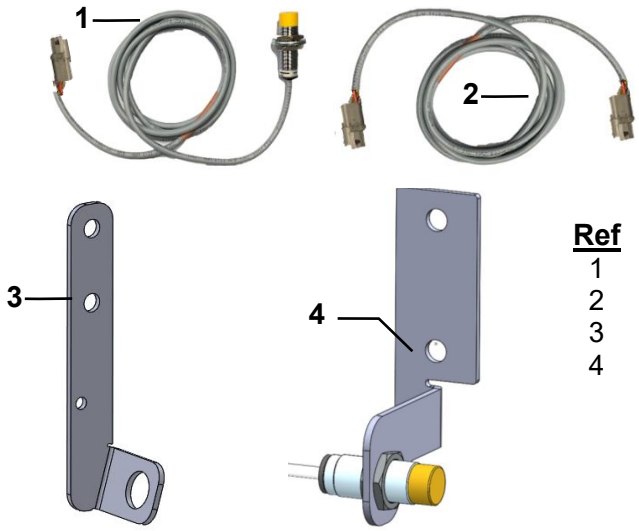

Ref	Description	Part #	Qty
1	End of Bale Sensor	006-7401	2
2	End of Bale Ext.	006-7401EXT	2
3	Marcrest EOB Bracket	001-4648ME	1
4	Marcrest Flake Bracket	001-4648MSC	1
	Complete Assembly	**EOB-7SS-MDB**	

End of Bale (EOB) Bracket and Sensor
Installation – 768 Applicator

Locate the EOB Bracket (001-4648ME) and EOB Sensor (006-7401) and loosely install sensor into the angled bracket hole as shown; placing so the sensor is approximately centered within the bracket.

Align EOB bracket against the bottom corner channel of the RH chamber, placing so the yellow end of the EOB sensor is parallel with the back face of the needle arm. Mark the two mounting hole locations on the side of the chamber and drill 2x 9/32” holes. Secure sensor bracket to the chamber using 2x 5/16-18 x 1-1/4” thread cutting bolts.

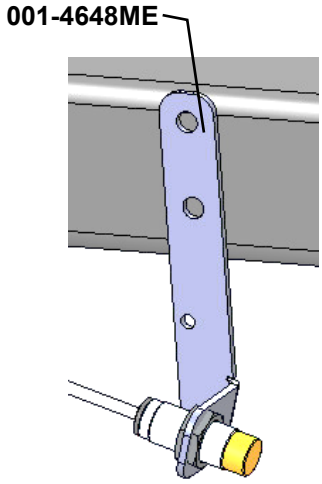

Adjust the EOB Sensor so there is a 3/16-1/4” gap spacing between yellow end of the sensor and needle arm. Tighten the two jam nuts on the sensor once final placement has been determined.

EOB Sensor Extension Harness (006-7401EXT) will be used to connect EBO sensor to the main baler wiring harness (006-762B) port labeled ‘EOB’. Route the sensor wiring along the bottom rail to the harness connection, securing with cable ties.

Flake/Stroke Count Sensor and Bracket

Installation – 768 Applicator

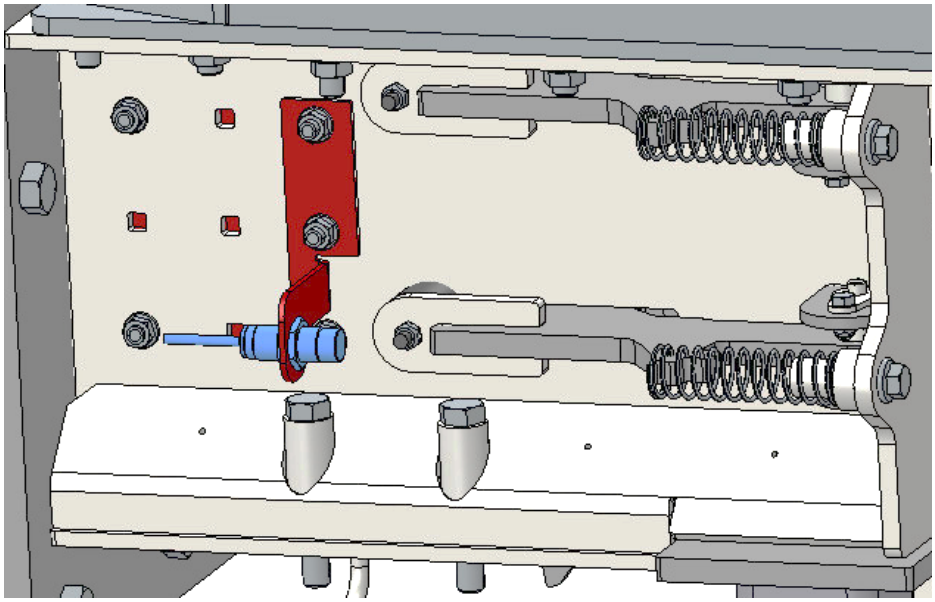

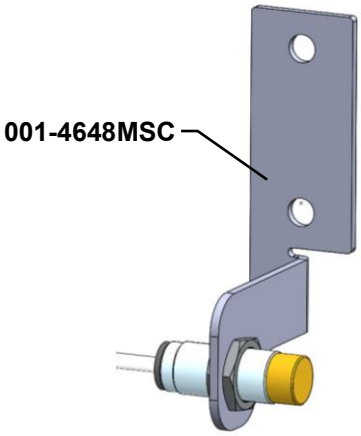

Locate the lower haydog on the RH side of the bale chamber and the two factory bolts directly to the rear and above the lower RH haydog. Remove the nuts from the bolts, place Flake Bracket (001-4648MSC) over the bolts and reinstall the nuts and tighten.

Install EOB Sensor (006-7401) so the yellow end of the sensor is approximately 3/16-1/4” from the back face of the haydog when actuated out of the bale chamber. Tighten both jam nuts on the sensor to secure the sensor in position.

Attach Extension Harness (006-7401EXT) and route flake sensor wiring alsong baler frame to connect the main baler wiring harness (006-762B) port labeled ‘Stroke Counter’. Secure wiring with cable ties.

Main Wire Harness and Connections – 768 Automatic

Main baler harness (006-762B) connects to the IPM Control Module mounted on the pump plate on the rear of the tank assembly. Route harness from the IPM along with the existing wire/hose bundle that follows the bottom of the baler frame along the RH side.

Keep harnesses away from moving parts and hydraulic hoses. Secure with existing cable clamps or use cable ties to secure to factory lines. Once all sensor connections are made on the harness, connect to the IPM module and secure all harness wires.

Main Control Modules and Wiring Harnesses

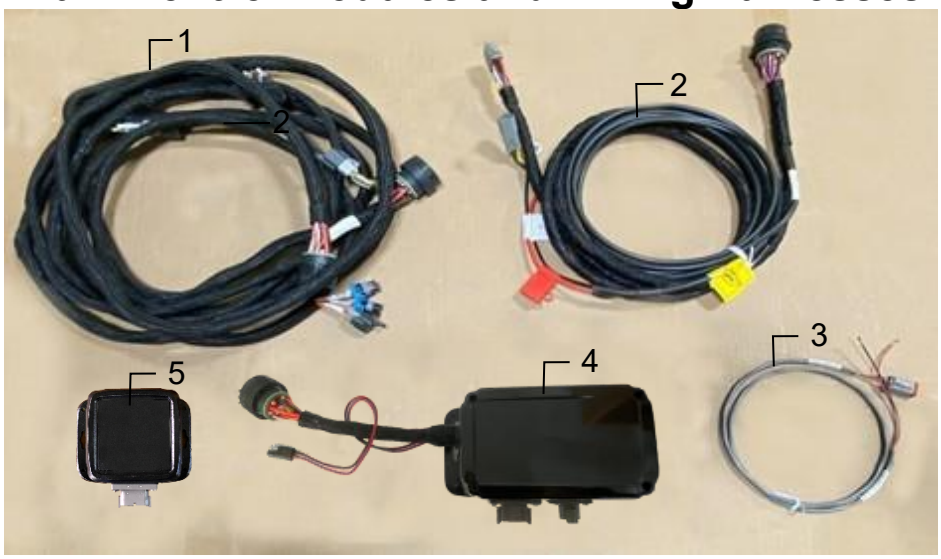

Ref	Description	Part#	Qty
1	Power Lead Baler 20’	006-762B	1
2	Power Lead Tractor	006-765IC	1
3	Key Switch Wire	006-765CPH	1
4	ISO Pump Module	006-7671SS	1
5	ISO Comm. Module	006-6673	1

Ref	Description	Part#	Qty
NP	120 Ohn Resistor	006-700R*	1
NP	Dust Plug Kit	006-765DP	1
NP	Optional Lightning to USB-A Communication Cable	006-6672USBC	1
NP	Optional USB-C to USB-A Communication Cable	006-6672USBX	1

*006-700R installation on 006-762B harness is required at all times when operating the small square 700 series applicator

Tractor Setup

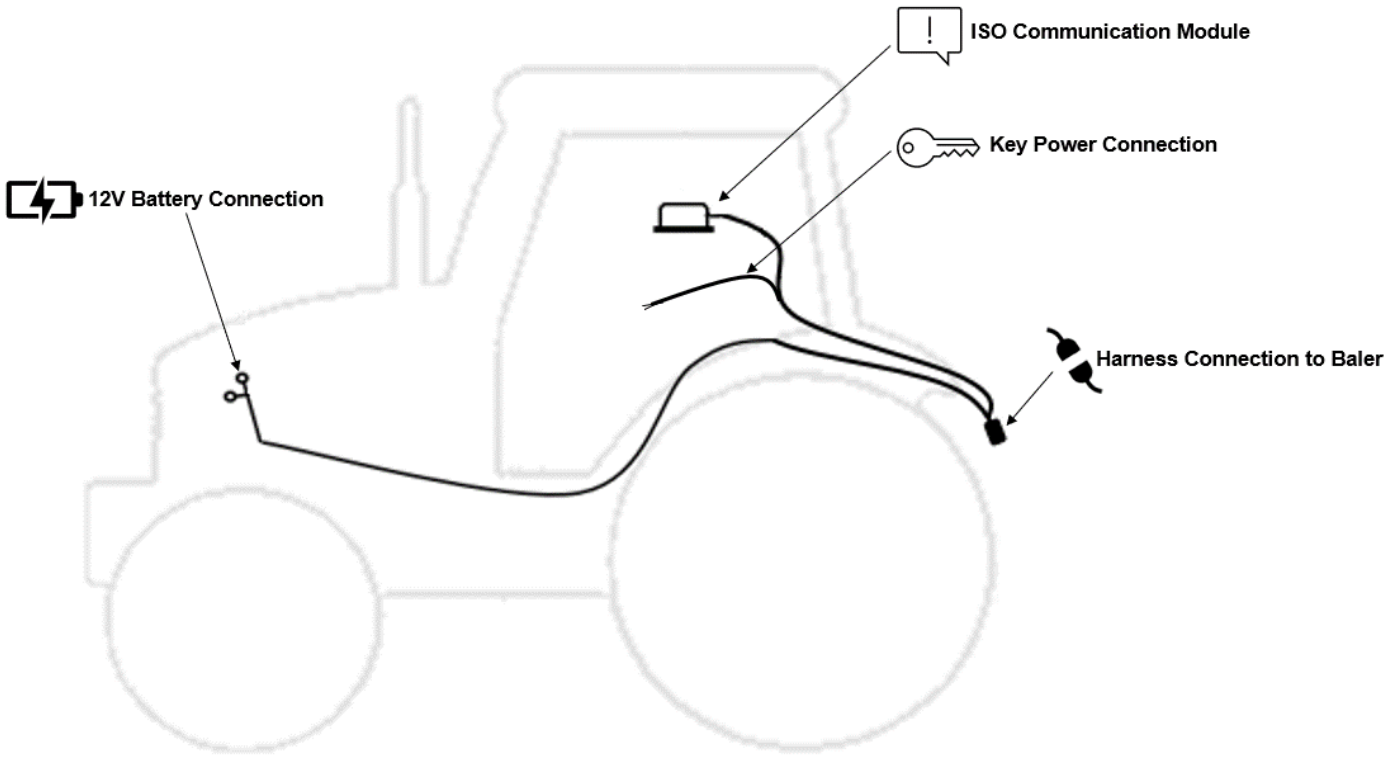

The general tractor setup of the 700 Series applicator can be seen above. The main harness of interest is the tractor power/communication harness (006-765IC). This harness will connect at the tractor battery, to the ISO Communication Module (ICM) mounted in the cab, a keyed power connection point, and connect at the hitch area to the baler power/communication harness (006-762B). View below to see highlighted installation instruction:

12V Battery Connection

The 12V battery connection must be at the tractor battery. Connection to alternative locations such as an accessory port can cause problems with applicator system.
MUST BE CONNECTED DIRECT TO TRACTOR BATTERY TERMINALS

ISO Communication Module

The ISO communication module is to be mounted inside the cab. Other mounting locations can lead to issues with weathering and operation. Once installed and the system is powered, a green light will turn on with the ICM module.

Key Power Connection

Ensure a solid keyed connection is found inside the cab and wired into. Poor keyed power connection can result in applicator system issues.

Harness Connection to Baler

The tractor harness connects at the hitch to baler power/communication harness (006-762B). This will allow the system components to communicate with one another. Ensure connections are debris and corrosion free.

Display Options

Optional Harvest Tec Display

The 700 series Harvest Tec Display will allow you to set your real time baling parameters to ensure the most precise application to every bale. This is done by utilizing the improved touch technology to select objects, enter data, and swipe through operational screens.

The Harvest Tec Display offers easy integration by connecting to the additional CAN plug on the 006-765IC harness. Once connected the Harvest Tec display will power up with applicator system.

Note: The Harvest Tec Display must be used as a standalone display, the baler cannot run both ISO integrated (with compatible large square balers only) and also on the Harvest Tec Display. Must be one or the other. Removal of the baler integration harness is required to use the HT Display. Baler ISO integration option is not available for small square and round baler systems.

Optional Tablet Display

Precision Baling App

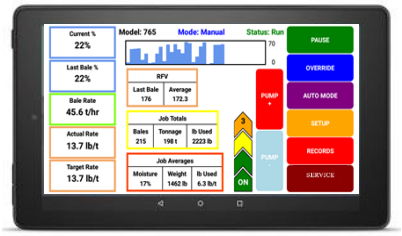

The iOS or Android Tablet displays offer the ability to communicate with the 700 series applicator system via hard-wired connection to the ISO Communication Module (ICM). Through the free Precision Baling App, the operator can set real time baling parameters to ensure the most precise application to every bale. This provides a multi-use option while utilizing the improved app to select objects, enter data, and easily switch through operational screens.

The Tablet Display offers easy integration by connecting a data transfer/charging cable to the USB port on the ICM module (USB port closest to LED light). The Harvest Tec Applicator will display upon opening the app and powering up the applicator system when connected. Tablets can be used in addition to ISO integrated baler VT display (on compatible large square baler systems only).

***Made for iPad® (iOS 15 or higher) or Android Tablet (Does not work with Amazon Fire).**
Required to be running the current operating system or one version previous.
iPads 10+ years are no longer supported by Apple and are unable to download app.
*iPad is a trademark of Apple Inc., registered in the U.S. and other countries.

Optional Harvest Tec Display Kit (030-7670DK)

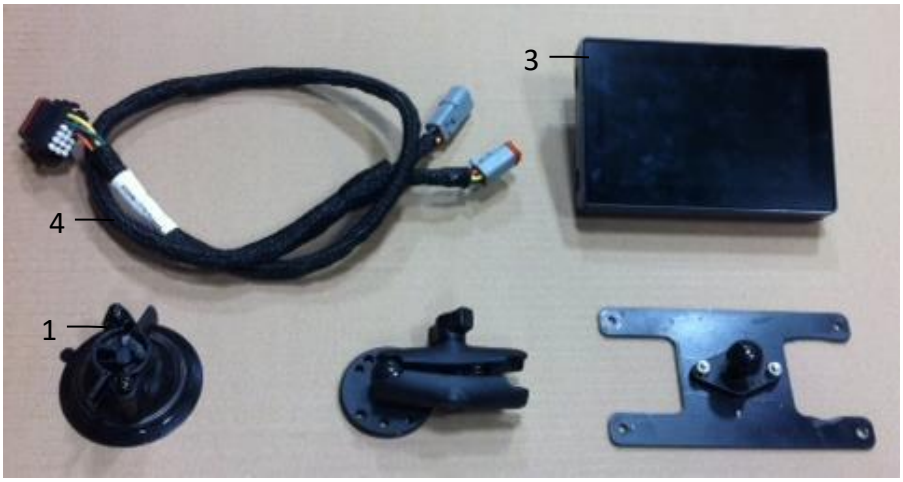

Ref	Description	Part #	Qty
1	Suction Cup Mount	001-2012SCM	1
2	Ram Mount	001-2012H	1
3	Harvest Tec Display	006-765GVT	1
4	Display Harness	006-765GH	1
5	Mounting Plate	001-700GH	1
NP	700 Series Resistor	006-700R	1

Complete HT Display Kit 030-7670DK

Installation Instructions

1. Connect 006-765GH harness connection to 006-765IC tractor harness key power plug.
2. Connect 006-765GH harness to the Harvest Tec VT Display before tightening mount in place.
3. Tighten the mounting and display. Streamline harness as necessary.
4. Once connected, power cycle the system and ensure display is working properly.

NOTE: CANNOT OPERATE APPLICATOR SYSTEM WITH HARVEST TEC DISPLAY AND BALER ISO INTEGRATION or TABLET/ iPad AT THE SAME TIME.

Optional Android Display Kit (030-1670DK)

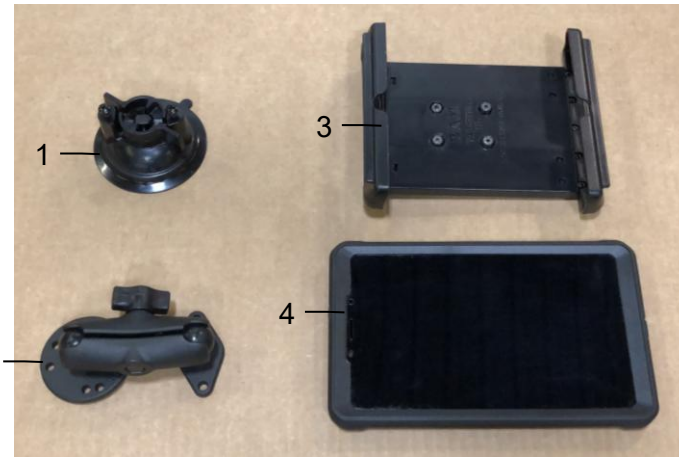

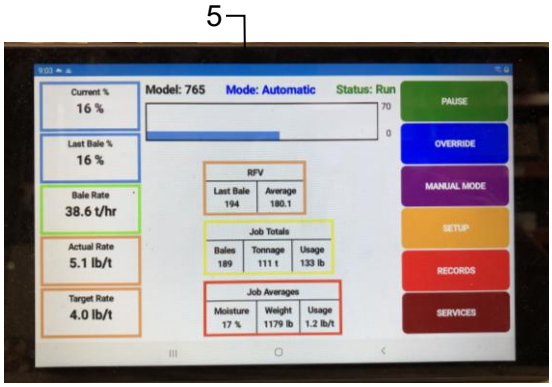

Ref	Description	Part #	Qty
1	Suction Cup Mount	001-2012SCM	1
2	Ram Mount	001-2012H	1
3	Spring Load Cradle	001-2012SLC	1
4	Android Case	001-2012A1	1
5	Android Tablet	006-1670AT	1
NP	USB-C to USB-A Cable	006-6672USBX	1

Complete Android Tablet Display Kit **030-1670DK**

Note: Use a quality communication cable ending with a USB-A connection to connect tablet to (006-765ICM) control module - plug into the USB port showing a tablet.

Optional iPad Display Kit (030-6670DK)

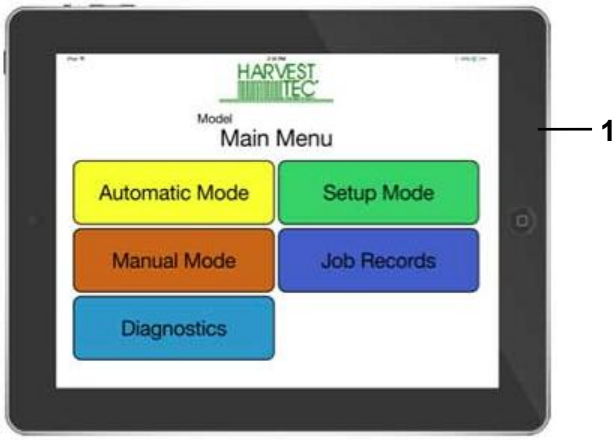

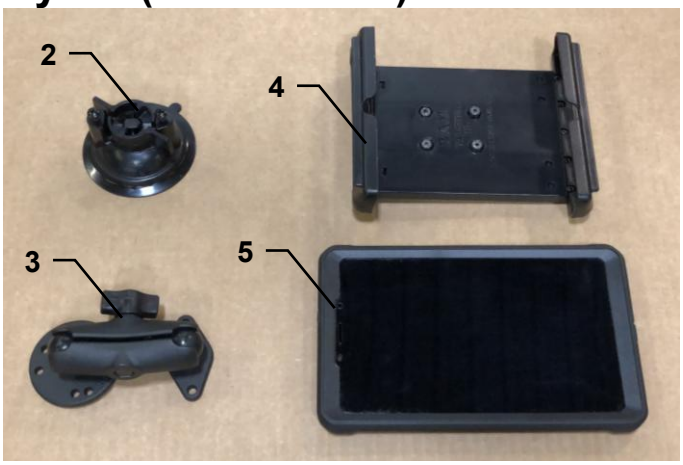

Ref	Description	Part #	Qty
1	iPad Mini 6	006-6670IP	1
2	Suction Cup Mount	001-2012SCM	1
3	Ram Mount	001-2012H	1
4	Spring Load Cradle	001-2012SLC	1
5	iPad Mini 6 Case	001-2012C6	1
NP	Power/Comm. Cable	006-6672USBX	1

Complete iPad Mini Display Kit **030-6670DK**

iPad mini is a trademark of Apple Inc., registered in the U.S. and other countries

Optional ISO Display Adapter Harness (006-7670A or 006-7670F)

For use with a dedicated ISO display

The 700 Series Applicator has the option to tie into compatible dedicated ISO monitors by utilizing the diagnostic port. When connected, the Harvest Tec System will populate as its own object pool within the ISO display. When this object pool is selected, the ISO monitor will then function as a dedicated monitor for the Harvest Tec System.

The Harvest Tec System will function as a stand-alone system when using this adapter.
System will not integrate with the baler ISO system software when using this adapter.

Any tablet connected to the ICM module must be disconnected from the ICM before the Harvest Tec Object Pool screen will activate within the ISO display.
To connect Adapter Harness (006-7670A or 006-7670F), unplug the 4-pin Key Power Plug (006-765CPH) connection from the Tractor Harness (006-765IC) and replace with the plug from the Adapter Harness. Connect the round plug end of the Adapter Harness to the Tractor ISO Display Diagnostic port.

Scan the QR code to view a short video of the
Adapter Harness for ISO Display:

For additional product and service information:
See our YouTube Channel https://www.youtube.com/@harvesttec

ISO Diagnostic Port Adapter (006-7670A)

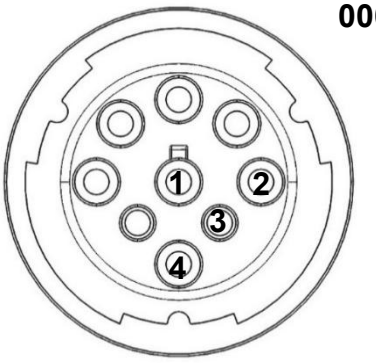

006-7670A connecting plug and pin

Pin 1	Black	Ground
Pin 2	Yellow	CAN High
Pin 3	Green	CAN Low
Pin 4	Red	12V+ Key Power

ISO Diagnostic Port Adapter (006-7670F)

For Newer Fendt and MF Tractors with plug location in the cab ceiling

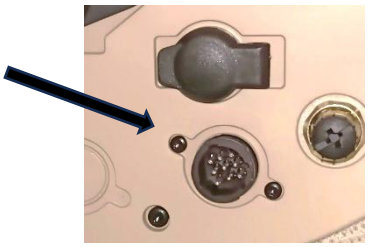

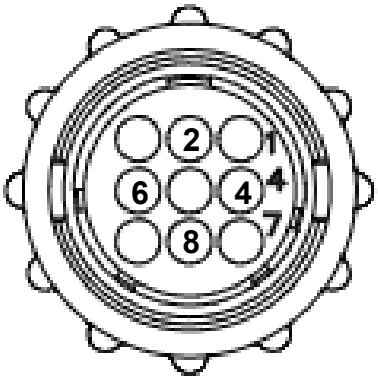

006-7670F connecting plug and pin

Pin 8	Black	Ground
Pin 4	Yellow	CAN High
Pin 2	Green	CAN Low
Pin 6	Red	12V+ Key Power

Optional Crop Eye Forage Indicators
Installation – Marcrest Balers

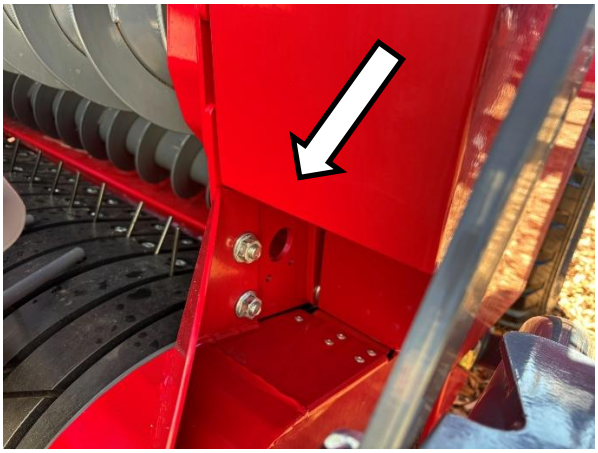

Sensor Placement: Crop eye sensors must be mounted directly across from each other on the baler pickup. Locate the factory EOR/Hay Indicator mounting holes on each side of the baler pickup assembly. Attach the red Receiver Eye sensor (006-5105R) on the RH side of baler with supplied plastic retaining nut. No additional mounting brackets are used for mounting. Do not over-tighten retaining nut to eye sensor. Repeat process on the LF side of the pickup for mounting the bracket and green Emitter Eye sensor (006-5105G).

Harness Routing (700 Series Systems): Route the green leg of the EOR harness to the green sensor on the LH side of the pickup, and route the red leg of the EOR harness to the red sensor on the RH side of the pickup. Follow existing wires/hoses where possible, securing with cable ties. Avoid pinch points and allow for complete range of motion of pickup head without stretching the harness.

From the front LH corner of the baler, route the opposite end of the wire harness (001-7503H) towards the rear of the baler to the 'EOR' connector on main baler harness 006-762B. Secure excess wiring with cable ties.

Harvest Tec 474C Parts Breakdown

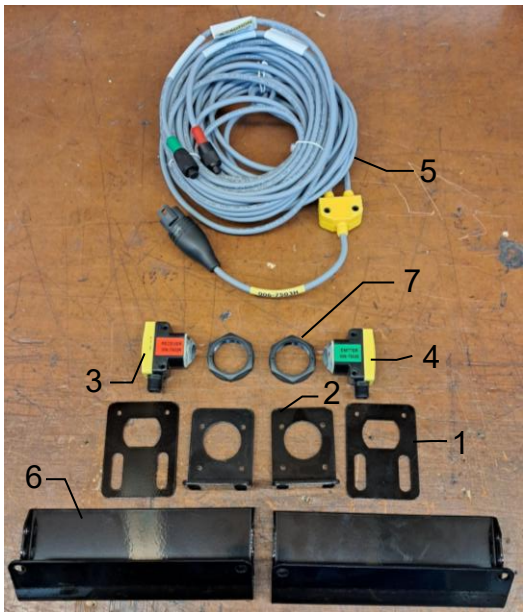

Ref#	Description	Part #	Qty
1	Trash Plate	001-5105S	2
2	Hay Indicator Bracket	001-5105E	2
3	Sensor -Receiver (Red)	006-7502R	1
4	Sensor -Emitter (Green)	006-7502E	1
5	Hay Indicator Harness-Deutsch Plug	006-7503H	1
6	Hay Diverter (used with NH and Case IH SBX only)	001-5105F	2
7	Hay Indicator Retaining Nut (Replacement, included with crop eye)	006-7502N	2

Wiring Diagram – Small Square Balers

1. Connect the power harness (006-765IC) to the tractor battery (12 volt) using the red wire with fuse to the positive side and the black wire to the negative.
   A. **The power harness must be connected to the battery!**
      CONTACT HARVEST TEC BEFORE MODIFICATIONS.
      The unit will draw more amps than convenience outlets can handle. Any modifications of the power harness will void systems warranty
   B. **This unit will not function on positive ground tractors.**
   C. **If the unit loses power while operating it will not keep track of accumulated pounds of product used.**
2. The power harness on the tractor (006-765IC) will run from the tractor battery to the hitch. The power harness on the baler (006-762B) will connect to the tractor power harness (006-765IC) at the hitch.
3. Connect the keyed power wire (006-765CPH) to a keyed power source on the tractor.
   The keyed power wire must connect to a keyed source or the unit will not power up correctly.
4. Attached the ISO Communication Module (006-6673) to the tractor power harness (006-765IC).
5. Attach the End of Bale (EOB) connection on baler harness (006-762B) to the EOB Sensor (006-7401).
6. Attach the Stroke Counter connection on baler harness (006-762B) to the Flake Count Sensor (006-7401).
7. Attach the Solenoid (SOL 1) connection on the baler harness (006-762B) to the solenoid (002-2203F).
8. Attach the Flowmeter (006-4724A) to the port on ISO Pump Module on pump plate assembly.
9. Attach the rubber Molded Connector from ISO Pump Module to the Pump (007-4120DE).
10. Attach Moisture Harness (006-7307EM2) to the port on the ISO Pump Module.
11. Ensure 006-700R Terminator is connected to CAN/IDM port on 006-762B harness.

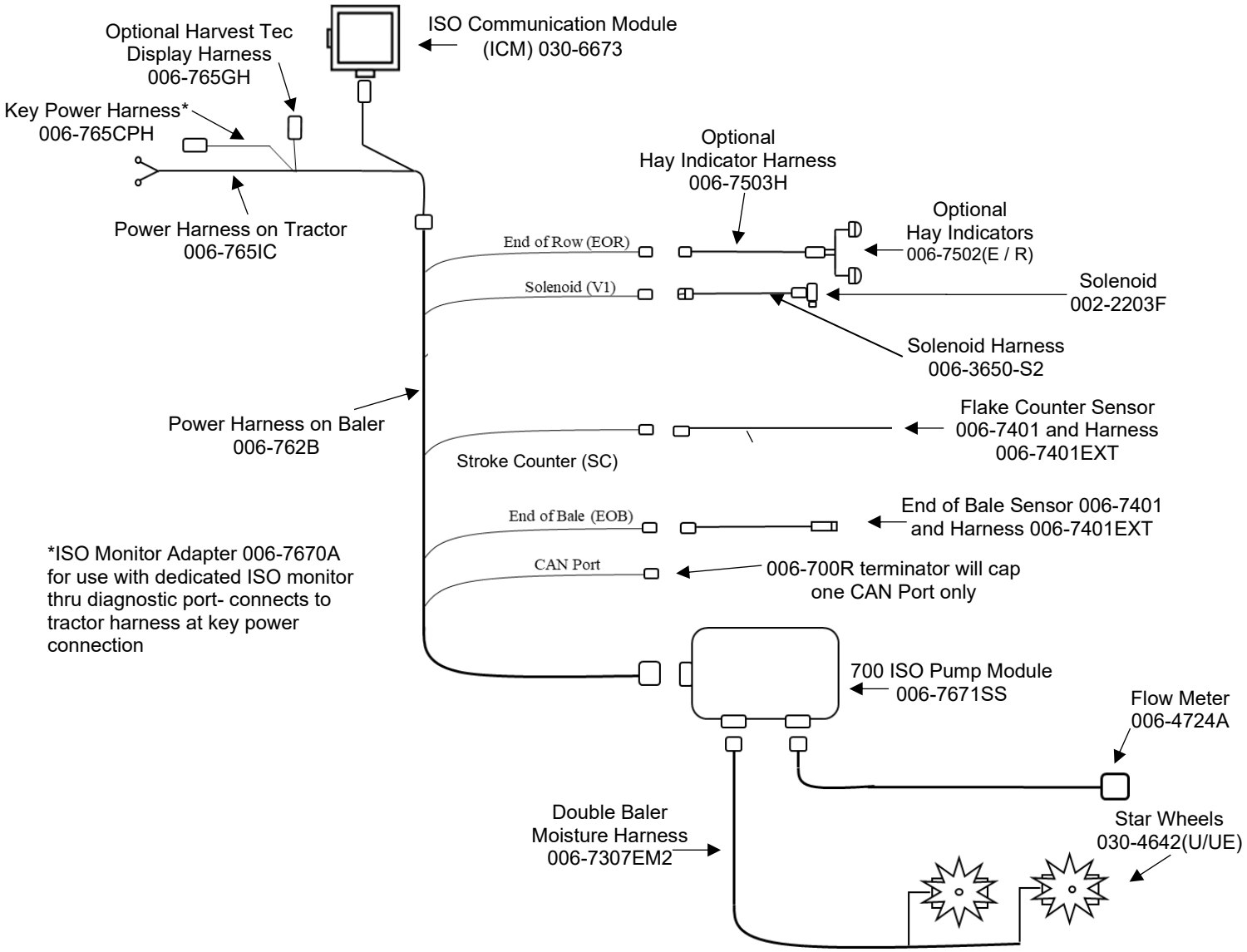

Pin Outs – 700 Small Square Balers

Integrated Control Module (ICM) on Tractor Harness 006-765IC

(Deutsch Plug Number: DTM06-12SA)

Pin 1	Red	+12V from ECU
Pin 2	Purple	Signal Wire
Pin 3	Red/White	+12V CAN X
Pin 4	Black/White	Ground CAN X
Pin 5	Orange	CAN X Hi
Pin 6	Blue	CAN X Lo
Pin 7	Green	ISO CAN Lo
Pin 8	Yellow	ISO CAN Hi
Pin 9	White	GPS Expansion 1
Pin 10	Gray	GPS Expansion 2
Pin 11	Brown	GPS Expansion 3
Pin 12	Black	Ground from ECU

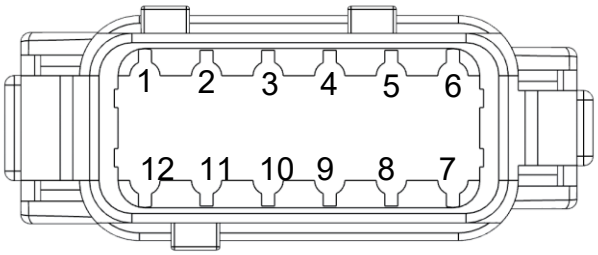

ISOBUS Plug on Tractor Harness 006-765IC

(Deutsch Plug Number: DT04-4P)

Pin 1	Red	+12V from ECU
Pin 2	Yellow	ISO CAN Hi
Pin 3	Green	ISO CAN Lo
Pin 4	Black	Ground from ECU

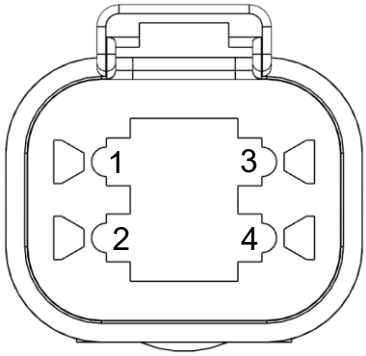

Power / Communication Tractor Harness 006-765IC at Baler Hitch

(Deutsch Plug Number: HDP24-24-18PN)

Pin 1	Not Used	----
Pin 2	Yellow	ISO CAN Hi
Pin 3	Green	ISO CAN Lo
Pin 4	Red	+12V Power to ECU
Pin 5	Black	Ground to ECU
Pin 6	Red	+12V From Battery
Pin 7	Not Used	----
Pin 8	Black	Ground From Battery
Pin 9	Not Used	----
Pin 10	Purple	Signal Wire
Pin 11	Red/White	+12V CAN X
Pin 12	Black/White	Ground CAN X
Pin 13	Orange	CAN X Hi
Pin 14	Blue	CAN X Lo
Pin 15	White	GPS Expansion 1
Pin 16	Gray	GPS Expansion 2
Pin 17	Brown	GPS Expainsion 3
Pin 18	Not Used	----

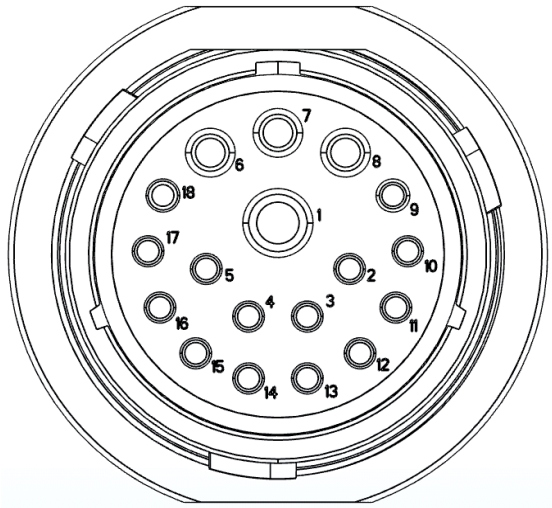

Pin Outs (continued)

Power / Communication Baler Harness 006-762B at Baler Hitch IPM
(Deutsch Plug Number: HDP26-24-18SN)

Pin 1	Not Used	----
Pin 2	Yellow	ISO CAN Hi
Pin 3	Green	ISO CAN Lo
Pin 4	Red	+12V Power to ECU
Pin 5	Black	Ground to ECU
Pin 6	Red	+12V From Battery
Pin 7	Not Used	----
Pin 8	Black	Ground From Battery
Pin 9	Not Used	----
Pin 10	Orange/White	+12V Power to EOR
Pin 11	Not Used	----
Pin 12	Not Used	----
Pin 13	Not Used	----
Pin 14	Not Used	----
Pin 15	Not Used	----
Pin 16	Not Used	----
Pin 17	Not Used	----
Pin 18	Not Used	----

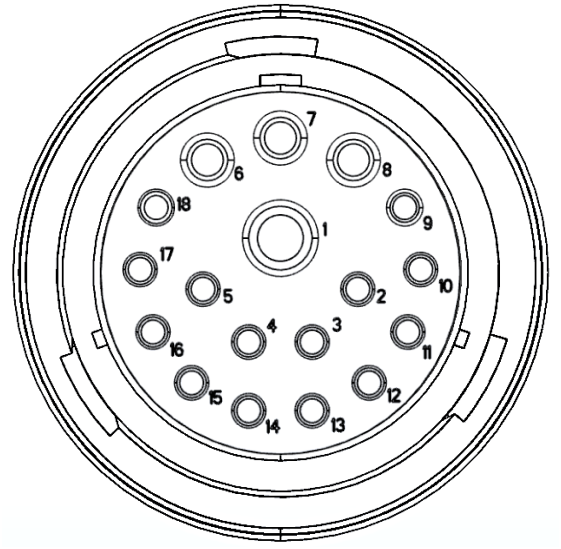

Power / Communication Baler Harness 006-762B at IPM Module
(Deutsch Plug Number: HDP24-24-18SN)

Pin 1	Not Used	----
Pin 2	Yellow	ISO CAN Hi
Pin 3	Green	ISO CAN Lo
Pin 4	Red	+12V Power to ECU
Pin 5	Black	Ground to ECU
Pin 6	Red	+12V From Battery
Pin 7	Not Used	----
Pin 8	Black	Ground From Battery
Pin 9	Not Used	----
Pin 10	Orange/White	+12V Power to EOR
Pin 11	Orange/Black	Ground to EOR
Pin 12	Purple/Green	EOR Signal
Pin 13	Blue/White	EOB Signal
Pin 14	Gray/Red	+12V Power to Solenoid 1
Pin 15	White/Black	Ground to Solenoid 1
Pin 16	Orange/Red	+12V Power to Solenoid 2
Pin 17	White/Black	Ground to Solenoid 2
Pin 18	Not Used	----

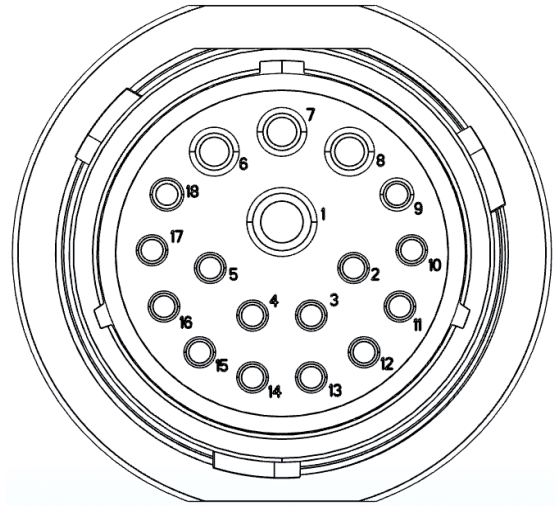

*IPM Module Whip Plug- Pin # 5 Not Used

Solenoid 1 Plug on Baler Harness 006-762B
(Deutsch Plug Number: APTIV 12052641)

Pin B	Gray/Red	+12V to Solenoid 1
Pin A	White/Black	Ground to Solenoid 1

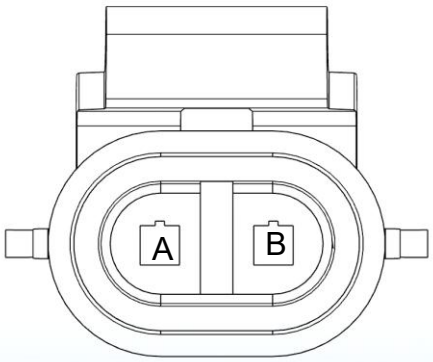

Pin Outs (continued)

CAN / IDM on Baler Harness 006-762B
(Deutsch Plug Number: DT06-4S)

Pin 1	Red	+12V to Solenoid 2
Pin 2	Yellow	ISO CAN Hi
Pin 3	Green	ISO CAN Lo
Pin 4	Black	Ground to Solenoid 2

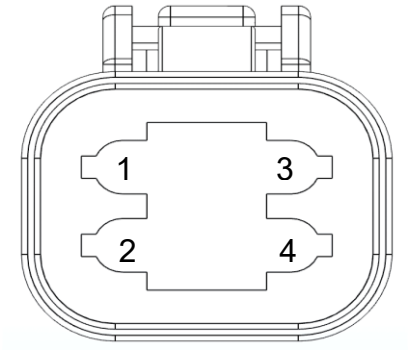

End of Bale (EOB) Sensor Plug on Baler Harness 006-762B
(Deutsch Plug Number: DT06-3S)

Pin 1	Orange/White	+12V to End of Bale Sensors
Pin 2	Orange/Black	Ground to End of Bale Sensors
Pin 3	Blue/White	Signal

Flake/Stroke Counter Sensor Plug on Baler Harness 006-762B
(Deutsch Plug Number: DT06-3S)

Pin 1	Orange/White	+12V to End of Bale Sensors
Pin 2	Orange/Black	Ground to End of Bale Sensors
Pin 3	Blue/White	Signal

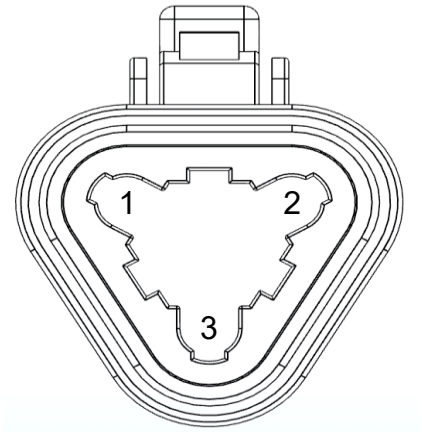

End of Row (EOR) Sensors Plug on Baler Harness 006-762B
(Deutsch Plug Number: DT06-3S)

Pin 1	Orange/White	+12V to End of Bale Sensors
Pin 2	Orange/Black	Ground to End of Bale Sensors
Pin 3	Blue/White	Signal

Pump Connection on 700 Controller Harness
(16 AWG Two-Wire Plug)

Pin 1	Red	Power to Pump
Pin 2	Black	Ground to Pump

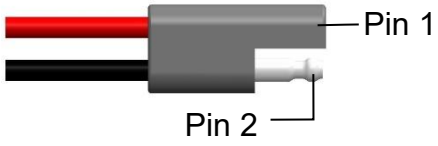

Harvest Tec LLC. Warranty and Liability Agreement

Harvest Tec, LLC. will repair or replace components that are found to be defective within 12 months from the date of manufacture. Under no circumstances does this warranty cover any components which in the opinion of Harvest Tec, LLC. have been subjected to negligent use, misuse, alteration, accident, or if repairs have been made with parts other than those manufactured and obtainable from Harvest Tec, LLC.

Our obligation under this warranty is limited to repairing or replacing free of charge to the original purchaser any part that in our judgment shows evidence of defective or improper workmanship, provided the part is returned to Harvest Tec, LLC. within 30 days of the failure. If it is determined that a non-Harvest Tec manufactured product has been used inside the Harvest Tec applicator system where the failure occurred, then Harvest Tec reserves the right to deny the warranty request at their discretion. Parts must be returned through the selling dealer and distributor, transportation charges prepaid.

This warranty shall not be interpreted to render Harvest Tec, LLC. liable for injury or damages of any kind, direct, consequential, or contingent, to persons or property. Furthermore, this warranty does not extend to loss of crop, losses caused by delays or any expense prospective profits or for any other reason. Harvest Tec, LLC. shall not be liable for any recovery greater in amount than the cost or repair of defects in workmanship.

There are no warranties, either expressed or implied, of merchantability or fitness for particular purpose intended or fitness for any other reason. This warranty cannot guarantee that existing conditions beyond the control of Harvest Tec, LLC. will not affect our ability to obtain materials or manufacture necessary replacement parts.

Harvest Tec, LLC. reserves the right to make design changes, improve design, or change specifications, at any time without any contingent obligation to purchasers of machines and parts previously sold.

Revised 1/24

HARVEST TEC, LLC.
P.O. BOX 63
2821 HARVEY STREET
HUDSON, WI 54016 USA
PHONE: 715-386-9100
FAX: 715-381-1792
Email: info@harvesttec.com