Installation Manual

Model 747P

55 Gallon

Automatic Preservative Applicator

HarvestTec®

EST. 1976

747P-26-INST-Imp&Metric
9/26

Harvest Tec 747P Table of Contents

	Page
Introduction	**3**
Tools needed	**3**
Installation of Applicator	**4-21**
Tank Saddle Kit	4-6
Pump Plate Assembly	7
Pump Plate Mounting Kit	8-9
Drain-Fill Line Kit	10
Parts Bags and Hosing	10
End of Bale Sensor	11
Moisture Sensor Kit	12-13
Spray Shield Assembly	14
Plumbing, Solenoid and Tip Outputs	15-16
Optional High Output Tip Kit	17-19
Main Wire Harness and Connections	20
Tractor Setup	**21**
Display Options	**22-25**
Optional HT VT Display Kit	23
Optional Android Tablet Display Kit	24
Optional iPad Display Kit	24
Optional ISO Display Adapter Plug	25
Wiring Diagram	**26**
Pin Outs	**27-29**
Warranty Statement	**30**

Introduction

Congratulations and thank you for purchasing a Harvest Tec Preservative Applicator. Please read this manual carefully to ensure correct steps are taken to attach the applicator to the baler. This applicator is designed to apply Harvest Tec buffered propionic acid.

Use of alternative products may cause complications including, but not limited to, inaccurate readings from the flow meter and damage to any parts which may come in contact with the alternative products. Use of alternative products results in the warranty being void.

A parts breakdown for the applicator system is located at the back of the manual for identification of replacement parts.

Tools Needed

- Standard socket set
- Standard screw driver or 5/16” nut driver
- Side cutter
- Hose cutter
- Crescent wrench
- Hammer
- Metal drilling and cutting tools
- Center Punch

Tank Saddle Kit (030-0447P-TK)
Models 747P or 442P Base Kit

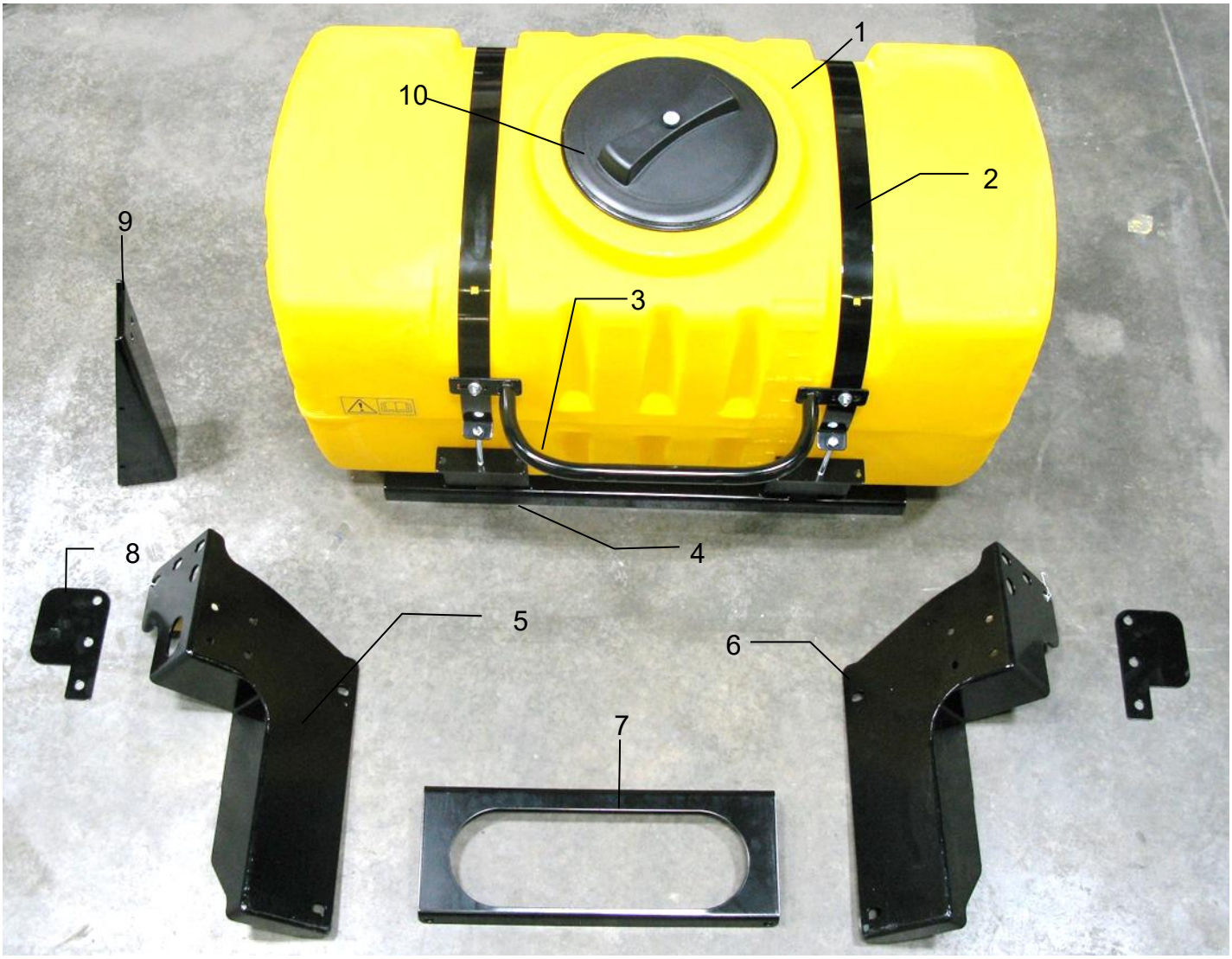

Ref	Description	Part #	Qty
1	Tank Assembly*	030-9203SQ	1
2	Tank Strap	001-4402	2
3	Handrail	001-6707HRS	1
4	Saddle	001-4703X	1
5	Left Tank Leg	001-4703XPL	1
6	Right Tank Leg	001-4703XPR	1
7	Tank Support	001-4703XPG	1

Ref	Description	Part #	Qty
8	Leg Shim	001-4703XS	2
9	Beacon Bracket	001-4703XBM	1
10	Complete 8”Tank Lid	005-9022H	1
Replace	Tank Lid Gasket	005-9022HBG	
Replace	Tank Lid Breather	005-9022B5	
NP	3/4" Tank Fitting	005-9100	2

Replacement Tank	030-9203SQ
Complete Assembly	**030-0447P-TK**

*Tank assembly includes poly tank, tank fittings and complete tank cap with gasket and breather

Installation of Applicator – 747P

Tank Saddle Kit (030-0447P-TK)

Installation

1. Locate the left saddle leg, 001-4703XPL, and mount to the left side of baler. Locate one leg shim bracket, 001-4703XS, and place in between the leg and side of the baler. Use three 1/2" x 1-1/4” hex bolts, 1/2" lock washers, and two 1/2" flat washers. Do not fully tighten.
2. Locate the right saddle leg, 001-4703XPR, and mount to the right side of baler. Locate one leg shim bracket, 001-4703XS, and place in between the leg and side of the baler. Use three 1/2" x 1-1/4” hex bolts, 1/2" lock washers, and two 1/2" flat washers. Do not fully tighten.
3. Tighten the hardware attaching the saddle legs, 001-4703XPL & 001-4703XPR, and legs shims, 001-4703XS, to the side sheets of the baler.
4. Install the tank assembly (tank, straps, handrail, and saddle pan) on the legs. Secure the saddle pan, 001-4703X, to the saddle legs with 1/2" flat washer, 1/2" lock washer, and 1/2" hex nut from the bottom side in four locations. Tighten hardware.
5. Locate the tank support bracket, 001-4703XPG, and mount between the bottom of the saddle pan, 001-4703X, and the sheet metal covering the air tank using two 3/8" x 1” hex bolts, 3/8" lock washers, 3/8" flat washers and 3/8” nuts.
6. Locate the beacon bracket, 001-4703XBM, and attach to the top of the right saddle leg, 001-4703XPR, using four 3/8" x 1” hex bolts, 3/8” flat washers, 3/8” lock washers, and 3/8” hex nuts.

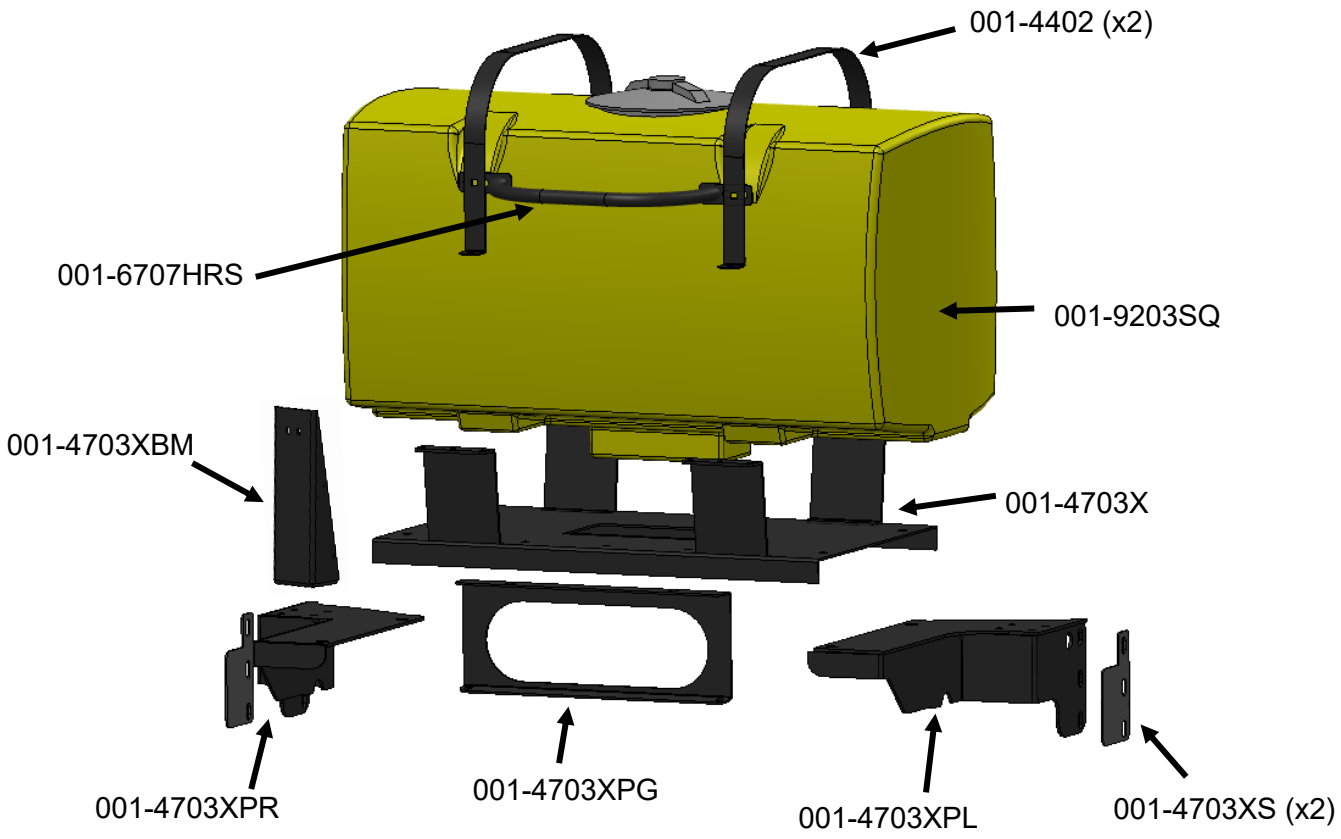

Figure 1

Installation (continued)

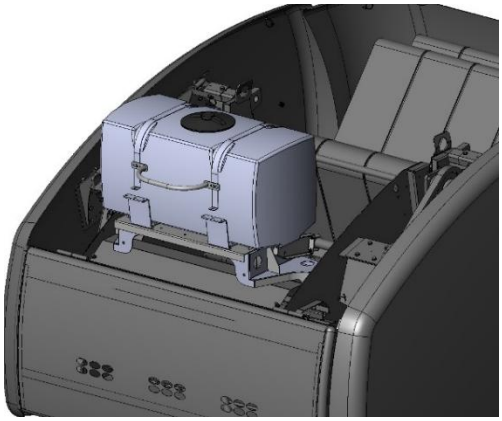

Optional Beacon Installation

1. Bolt beacon L-Bracket to beacon support (001-4703XBM) using two 5/16” x ¾” bolts and 5/16” flange nuts.
2. Secure beacon support to top of right saddle leg (001-4703XPR) at point A using four 3/8” x 1” hex bolts and flange nuts.

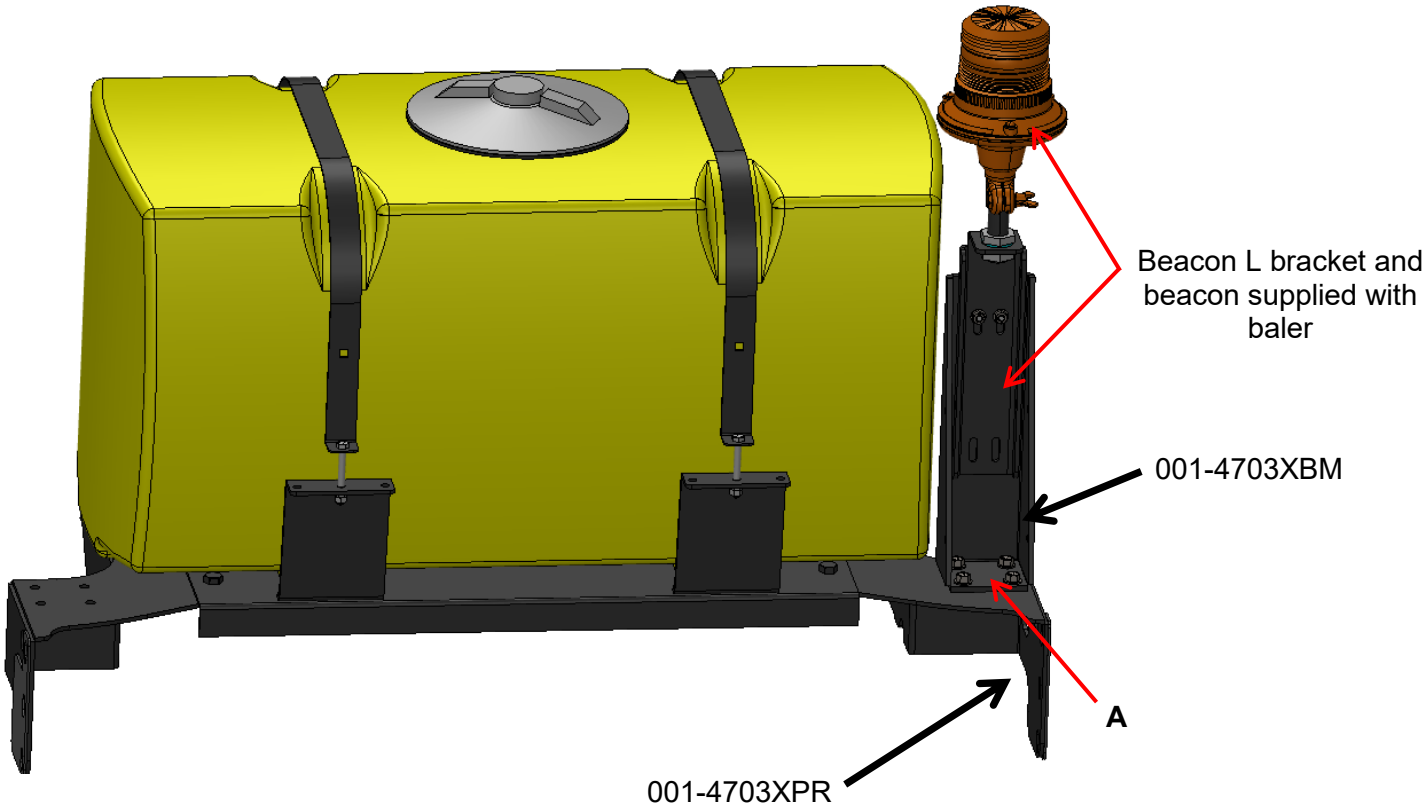

Parts Breakdown for Pump Assembly (PMP-7636P)

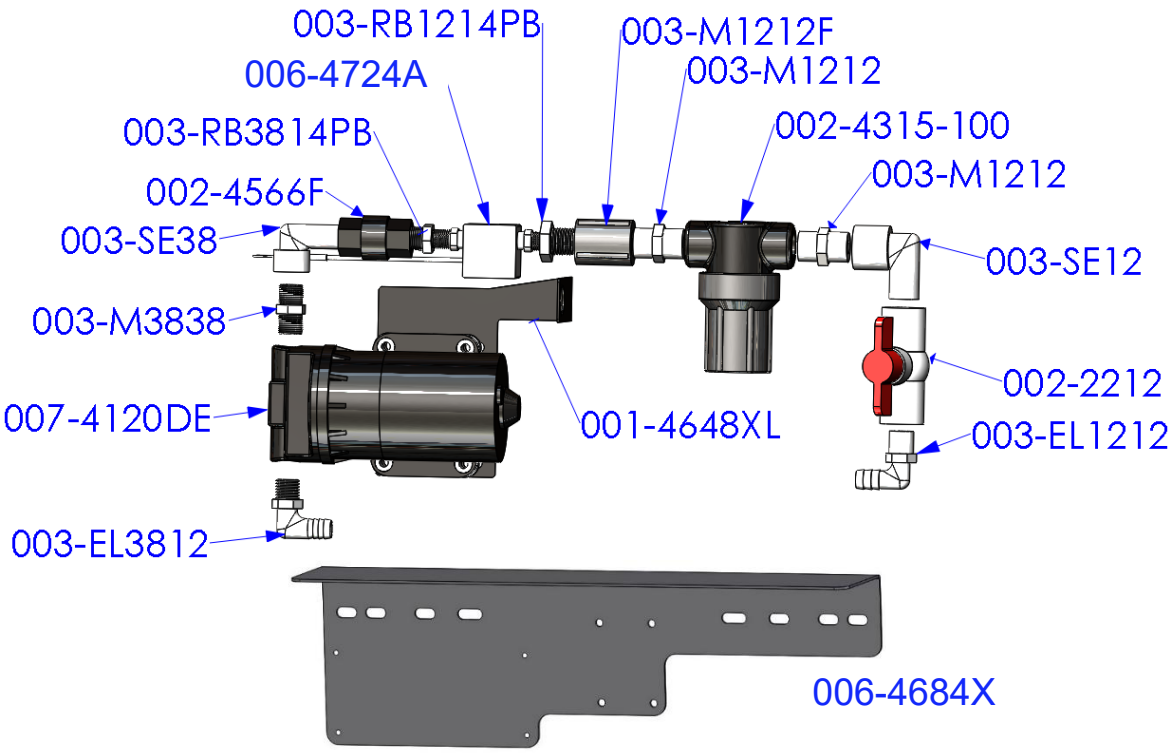

Part#	Description	Qty	Part#	Description	Qty
003-EL3812	3/8”MPT X 1/2"HB Elbow	1	003-M1212	1/2" Union	2
007-4120DE	700/300 Series Pump	1	002-4315-100	1/2" Line Strainer-100 Mesh	1
003-M3838	3/8” x 3/8” Union	1	003-SE12	1/2" Street Elbow	1
003-SE38	3/8” Street Elbow	1	002-2212	1/2" Ball Valve	1
002-4566F	3/8” Check Valve	1	003-EL1212	1/2"MPT x 1/2"HB	1
003-RB3814PB	RB 3/8” x 1/4” Reducer	1	001-4648XL	300 Pump Support	1
006-4724A	Flow Meter-Deutsch Plug	1	001-4648X	Pump Plate Mount	1
003-RB1214PB	RB 1/2" x 1/4" Reducer	1	003-A1212*	1/2" MPTx1/2"HB (Not Pictured)	1
003-M1212F	1/2" Coupler	1	003-A3812*	3/8” MPTx1/2"HB (Not Pictured)	1

*Note: Due to alternative baler designs, elbow 003-EL3812 can be replaced by straight fitting 003-A3812. Elbow 003-EL1212 can also be replaced by straight fitting 003-A1212. Both straight fittings are included.

Filter Bowl Replacement Parts

002-4315F Filter Bowl
002-4315D Filter Bowl Gasket
002-4315A Replacement Screen-100 Mesh

Pump Plate Mounting - 747P (PMP-442PMT)

001-4703XJ Pump Plate Support
001-4703XK Rear Bracket
001-4703XU U-Bolt Clamp

Pump Plate Mounting - 747C (PMP-442CMT)

001-4703XE Pump Mount Bracket
001-4703XF Pump Plate Bracket

Pump Plate Mounting – 736K, 738K, 739K

001-4704KK Pump Plate Bracket (qty 2 needed)

Completed Assembly – PMP-7636P

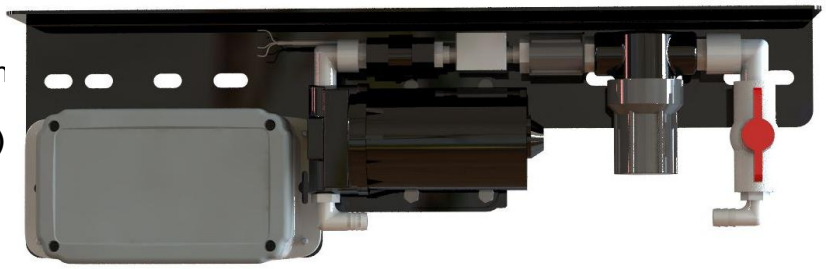

<u>Pump Plate Mounting Kit</u> (PMP-442PMT)
Automatic Applicator Kit 747P

Mounting the Front Pump Plate Support Bracket (001-4703XJ)

1. Open the right-side door of baler.
2. Locate mounting holes for your size baler in bracket (001-4703XJ). Mount bracket to pre-stamped square holes (Figure 1) on diagonal support structure of baler. Note: the following pictures will help in locating the pre-stamped holes on your baler. Secure with two 5/16” x 1” hex bolts, flats, locks and nuts.

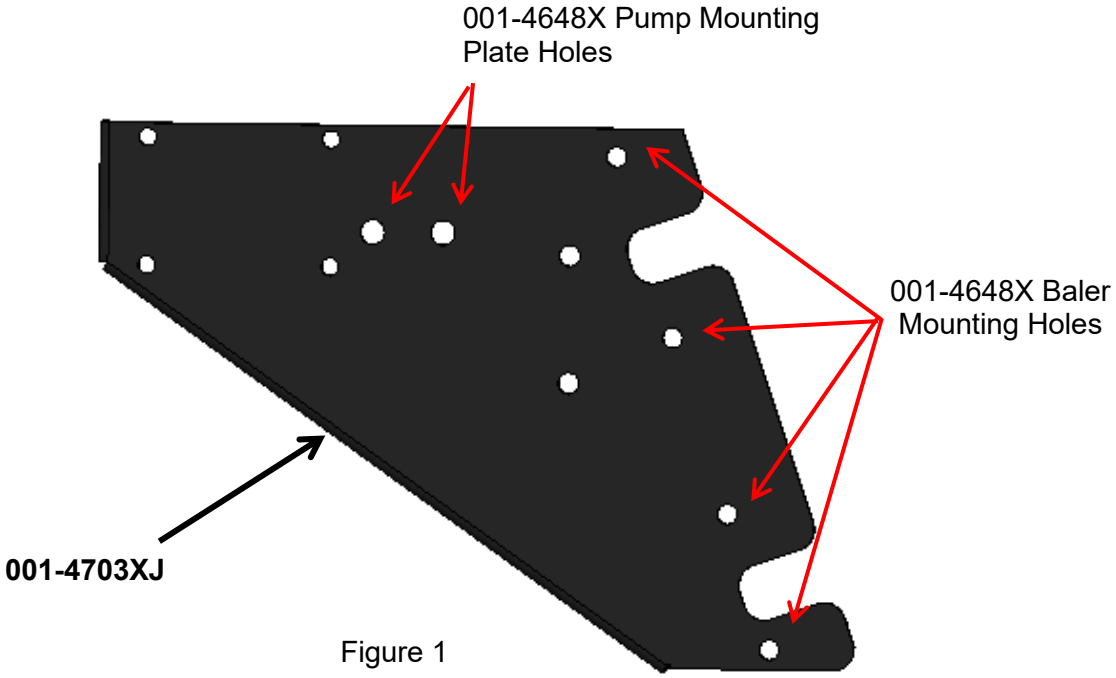

Figure 1

Mounting Rear Bracket (001-4703XK) and U-Bolt Clamp (001-4703XU)

Mounting bracket 001-4703XK will be used to mount the rear of the pump plate bracket to the stub pipe similar to Figure 4 (next page). Use two 3/8” x 1” bolts, flats, locks, and nuts to bolt them together. U-bolt secures around pipe similar to that in Figure 5.

Figure 2

Pump Plate Mounting (continued)

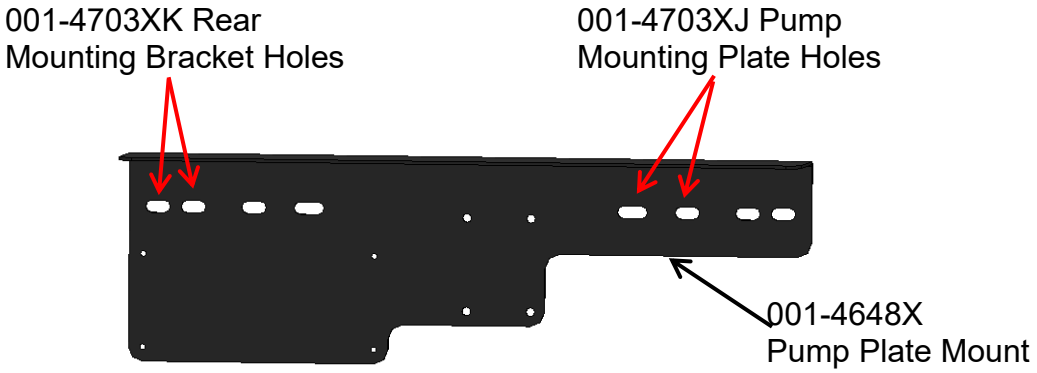

Figure 3

Use two 3/8” x 1” hex bolts, flat washers, lock washers, and nuts to secure Pump Plate Bracket (001-4703XJ) to back side of Pump Mounting Bracket (001-4648X). Use holes designated in Figure 4 on the Pump Plate Bracket (001-4703XJ). Slide the Pump Plate Bracket (001-4703XJ) so it touches the door support bracket. Attach pump plate with pump onto Mounting Plate (001-4648X) bracket with 3/8” x 1” bolts.

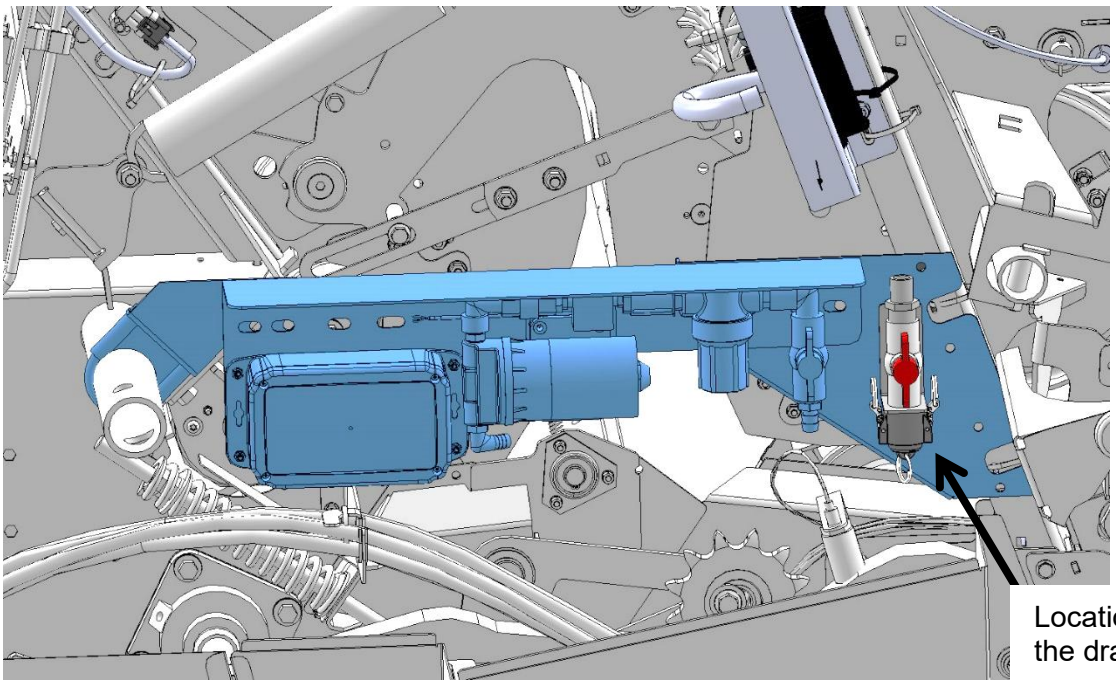

Figure 4

Drain-Fill Line Kit (030-0493DFK)
Tank Saddle Kit (030-0447P-TK)

Installation

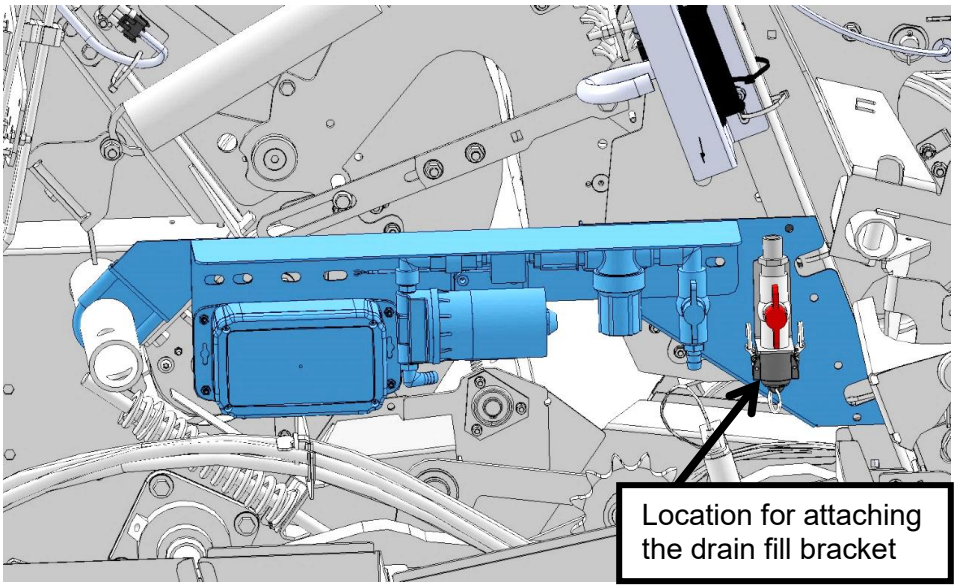

Locate Parts Bag 1 (PBA-1) and 3/4" EVA Tubing. Thread 3/4" elbow fitting (003-EL3434) into end of tank. Run the 3/4" hose from the elbow down the frame to a suitable location at the bottom of the baler. Locate the two holes on the baler's angled support bracket that line up with the holes in the valve bracket (001-6702H) and attach using two 5/16" x 1" self-tapping screws and secure with two 5/16" flange nuts. Connect valve assembly to other end of hose. Place hose clamps on both ends. Install supplied safety decals (DCL-8001 & DCL-8005) next to the ball valve assembly. Secure hose to baler frame using cable locks. The drain/fill line is to be used for all filling or draining of the tank. Fill or drain tank from ground level only. Transfer Pump Kits are available from Harvest Tec to utilize the drain/fill line connections.

Parts Bag Packages & Hoses

PBA-1

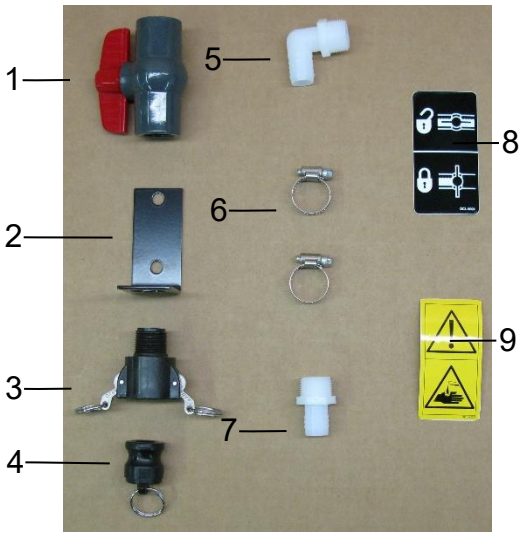

PBP-16

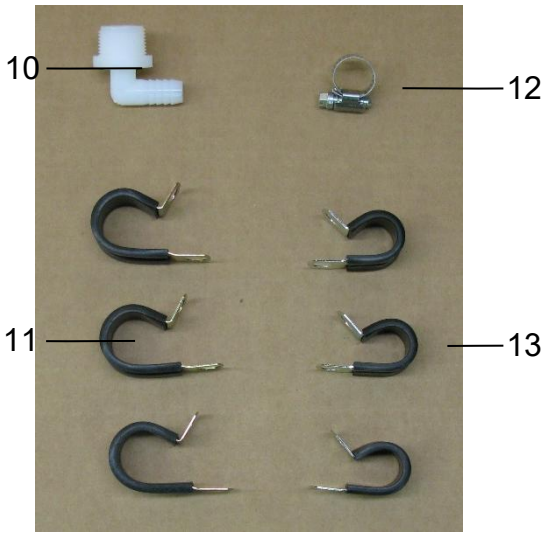

Ref	Description	Part #	Qty
1	3/4" Ball Valve	002-2200	1
2	Valve Holder	001-6702H	1
3	Female Coupler	002-2204A	1
4	Male Shut-Off Plug	002-2205G	1
5	3/4" x 3/4" Elbow	003-EL3434	1
6	#10 Hose Clamp	003-9004	2
7	3/4" x 3/4" Straight Fitting	003-A3434	1
8	Valve Decal	DCL-8004	1
9	Chemical Hazard Decal	DCL-8001	1
	Complete Drain Fill Kit (Inc. 10' of 3/4" EVA hose)	**030-0493DFK**	

Ref	Description	Part #	Qty
10	3/4" x 1/2" Elbow	003-EL3412	1
11	3/4" Jiffy Clip	008-9010	3
12	#6 Hose Clamp	003-9003	1
13	Small Jiffy Clip	008-9009	3

RB Hoses - Auto Systems

1/4" Hose (Solenoid to Tips)	002-9016	6 ft
1/2" Hose (Pump to Solenoid)	002-9001	15 ft
3/4" (Drain/Fill Line)	002-9002	10 ft

End of Bale Sensor Kit (EOB-7RB-A)
747P Applicator Kits

Installation- CNH Pro Belt Balers

Locate proximity sensor (006-7401) and the sensor bracket (001-4648RB). Locate a suitable location to mount the EOB Bracket (001-4648RB) on the right-hand baler chassis below the rear gate pivot point. Check for clearance with hydraulic cylinders before mounting the bracket. The bracket should be mounted to the front side of the hinge point, with the sensor aligned over the back door.

Mark and drill two 1/4” (7mm) holes and install the bracket using two 5/16” x1/4” self-tapping bolts.

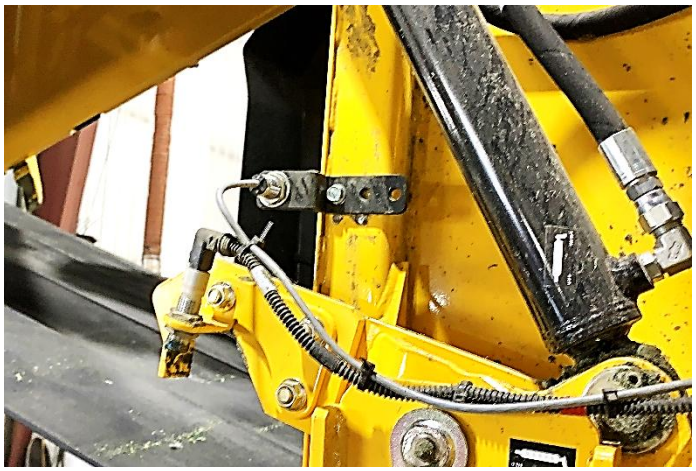

Align the sensor over the back door leaving 1/4" (7mm) of clearance between the yellow end of the sensor and the door when door is closed. Route the harness towards the End of Bale (EOB) plug connection on the main baler harness. EOB extension cable 006-7401EXT may be used. Secure with cable ties and take care to avoid pinch points and hydraulic lines.

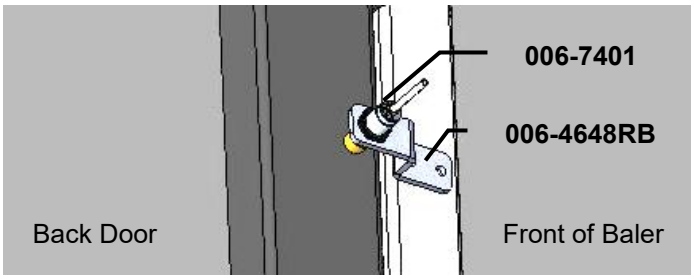

End of Bale Sensor Kit (EOB-7RB-A)

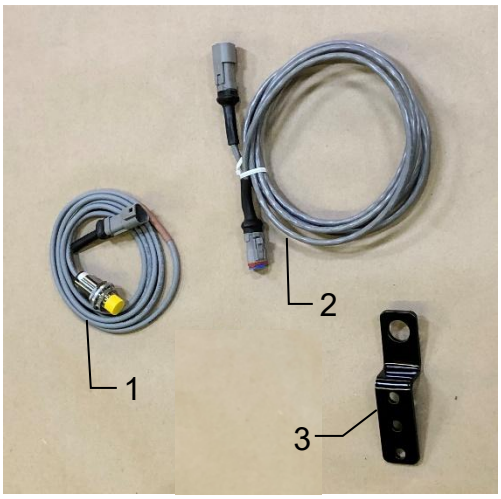

Ref	Description	Part #	Qty
1	End of Bale Sensor	006-7401	1
2	EOB Extension	006-7401EXT	1
3	End of Bale Bracket	001-4648RB	1

Complete Assembly EOB-7RB-A

Moisture Sensor Kit (MSH-7RB-B)
Installation - 747P

1. Open rear tail gate of baler and lock in the up position. Refer to baler manual to lock door open.
2. Remove bale shaping discs on each side of chamber by grinding welds. Once removed grind any remaining welds so sides of bale chamber are smooth.
3. Place plastic isolator (006-4641FX) in the same spot that the shaping disc had been. There should be a hole in the baler that matches up with the hole in the plastic isolator. If not, use the isolator as a template and mark the hole. Center punch the hole and drill it to 3/4" (19mm). Note: before drilling make sure you are not drilling into sensitive equipment on the outside of the baler. Drill through the complete square tube, 2” (51mm) in size. Repeat for other side of the baler.
4. Insert plastic bushing (006-4641G) from the outside of baler. Make sure it is flush with the outside of the baler frame. Go to the inside of the baler and mark amount that protrudes into the chamber. Remove and cut off excess material. Repeat for other side.
5. Using 4” (102mm) carriage bolt slide the parts on in following order: metal disc (001-4641HX), plastic isolator (006-4641FX) and shortened plastic bushing (006-4641G).
6. Insert disc assembly into 3/8” (10mm) hole from inside of bale chamber. Secure to outside of baler by attaching to the protruding carriage bolt in the following order: small isolator (006-4641), 1/2” D shaped washer, 1/2” lock washer, 1/2” jam nut. Tighten down to 50 ft/lbs (68 N/m) and repeat for the other side. Make sure no part of the bolt or hardware makes contact with the frame of baler-no metal to metal- cover exposed metal with silicone for added interference protection.
7. Route moisture harness (006-4640GX) from processor down to the carriage bolt on each side. Make sure it does not come in contact with any moving parts. Secure with cable ties.

*If there are Rotor Transition Kit (CNH part# 48093991) transition plates installed, they will need to be removed in order to install the moisture discs.

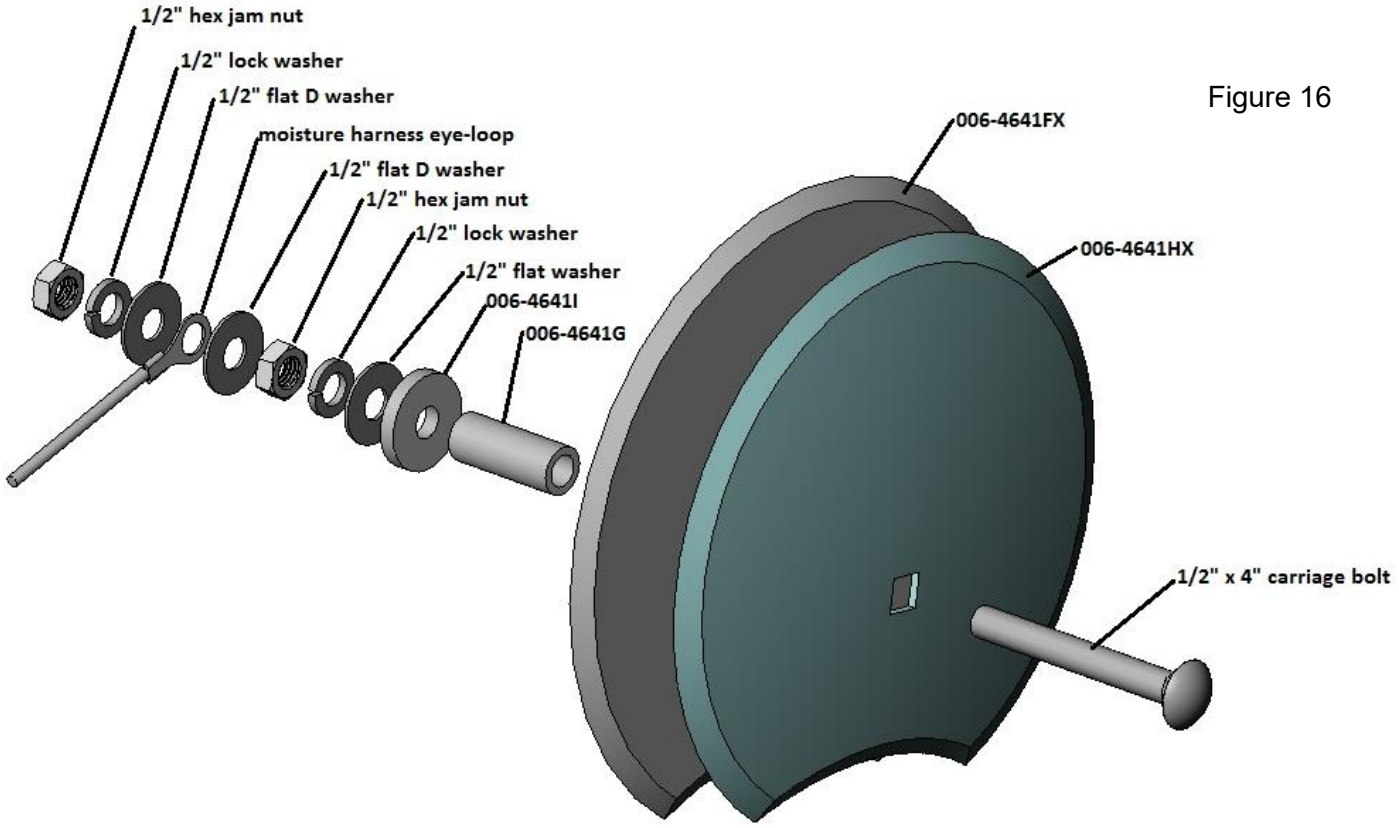

Figure 16

Installation of Moisture Sensor Pads and Disks (continued)

OSR (over-shot)

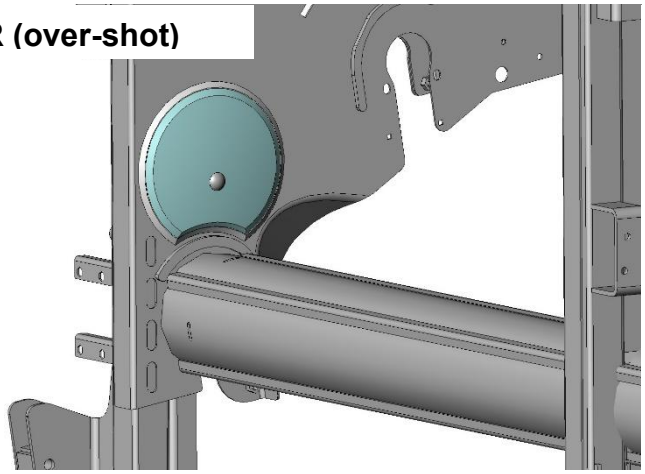

USR (under-shot rotor)

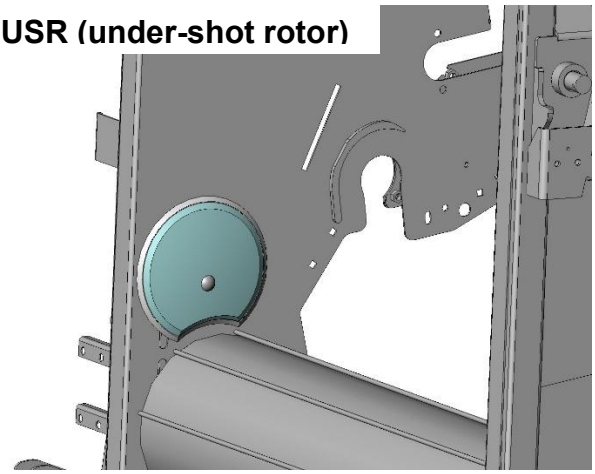

Moisture Sensor Kit Breakdown
(MSH-7RB-B)

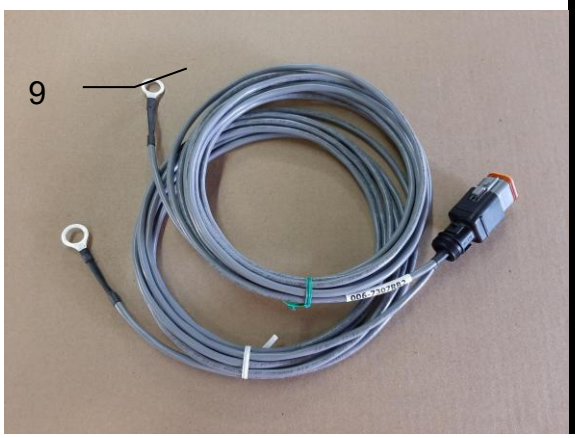

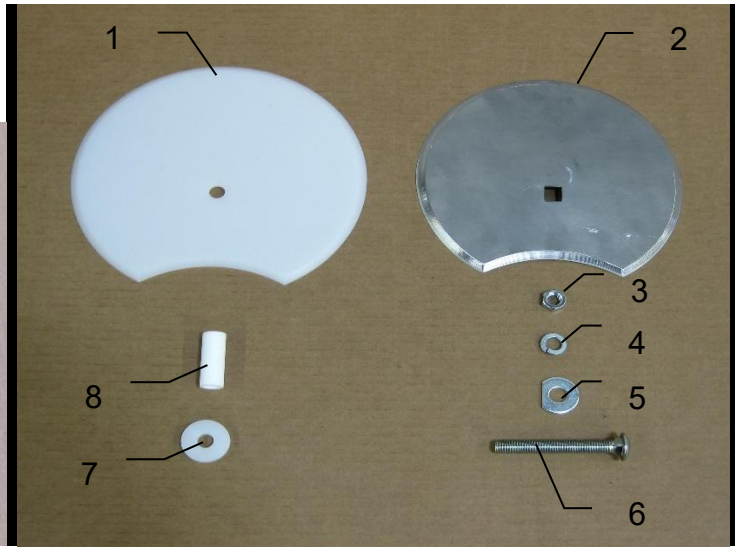

Ref	Description	Part #	Qty
1	RB Isolator	006-4641FX	2
2	RB Moisture Pad	006-4641HX	2
3	1/2” Nut	Hardware	4
4	1/2" Lock	Hardware	4
5	1/2" D Washer	Hardware	6

Ref	Description	Part #	Qty
6	1/2" x 4 1/2” Carriage Bolt	Hardware	2
7	Sensor Bushing	006-4641G	2
8	Plastic Isolator	006-4641I	2
9	Moisture Cable (13’ &16’)	006-7307RB2	1

Moisture Assembly 030-4643C
(qty 1 of each Ref 1-8)
Complete Assembly (Ref 1-9) MSH-7RB-B

Spray Shield Assembly (030-0747P-SO)

747P Applicator Kit

Installation

Locate the shield under the frame and position the spray shield holder (001-4435NCP) behind the shield with the formed flange to the rear. Attach spray shield support to baler frame with one 3/8” x 1” bolt, lock washer, and nut on each side. Attach spray shield assembly to shield holder by inserting the protruding pins into the holder and secure with two quick clips.

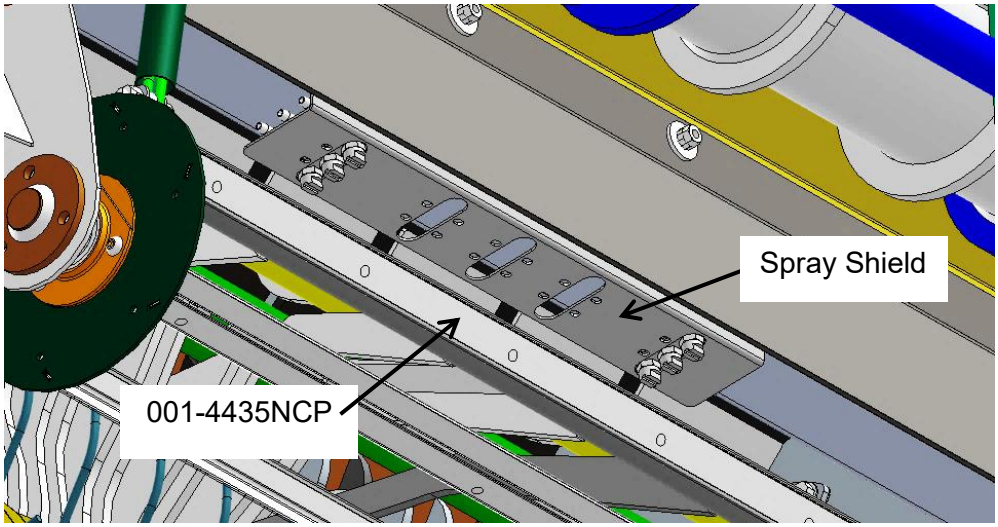

Spray Shield Assembly – 747P (030-0747P-SO)

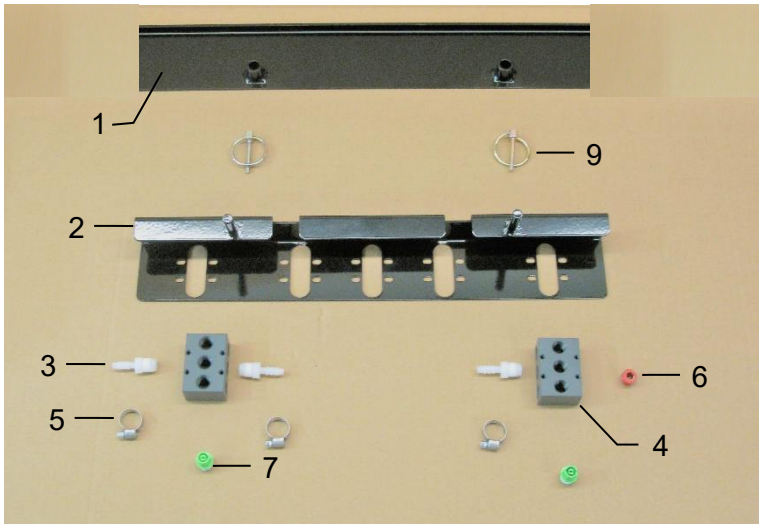

Ref	Description	Part #	Qty
1	Spray Sheild Holder	001-4435NCP	1
2	Spray Sheild	001-4435NSX	1
3	1/4" x 1/4" Straight Fitting	003-A1414	3
4	Spray Shield Manifold	001-4435NSB	2
5	Mini Hose Clamp	003-9002	3

Ref	Description	Part#	Qty
6	Plug Allen	003-F14A	1
7	Tip*	004-T8006-PT	2
8	Lynch Pin	008-4576	2

* Tip color subject to change

Spray Shield Only **030-0747P-SO**

Plumbing, Solenoid and Tip Outputs

A. Intake Line

Locate parts bag 16. Use the 003-EL3412 on the bottom of the tank to route 1/2" line (002-9001) to the 003-A1212 or 003-EL1212 fitting used on the ball valve attached to the pump plate. Attach hose clamps (003-9003) on both of the fittings.

B. Discharge Line

Route the 1/2" hose from the pump output toward the front of the baler to connect to the solenoid assembly (SOL-3SP-A).

C. Solenoid Assembly Installation

The Pulsing Solenoid is installed at the transition from the 1/2" hosing from the pump discharge line and the 1/4" line to supply the spray nozzles. Transition should be as close to the spray tips as possible. The best suited placement for this transition is a location where the solenoid can be placed in a horizontal position in-line with the hoses and clear of the pickup and any moving parts. This location is to be determined at the discretion of the installer. (See example).

Be sure to provide ample hose length to allow for full range of motion of the pickup head if spray tips move with pickup- too short of hose may cause hosing to pull out or break connections when pickup head is lowered.

Attach straight fitting (003-A1412) into end of 1/2" hose from the pump and secure with hose clamp (003-9003). Thread connector (004-1207G) onto fitting and place rubber washer (004-1207W) into quick disconnect (004-1207H). Connect to inlet side to the solenoid valve body (004-1207VF). Attach quick disconnect from spray nozzles/shield to outlet side of solenoid valve body, with rubber washer inside the quick disconnect.

Attach Solenoid Harness to Solenoid and route harness to connect with main baler harness. Secure Solenoid Harness to baler with zip ties away from any moving parts and pinch points.

D. Solenoid Maintenance

Check before use for any cracks or leaks in fittings- replace as necessary. The center section of valve body may need to be cleaned if solenoid does not pulsate when power is supplied by applicator. See breakdown for cleaning instructions. Components are compatible with Harvest Tec Buffered Propionic Preservative and use of other products may cause an increased need for service or replacement.

E. Standard and High Output Tips

Your baler comes with a standard tip set.
-Standard tip set will cover outputs of 48-448 lbs/hr (21-203 L/hr).
-High (Optional*) set will cover outputs of 80-800 lbs/hr (36-363 L/hr).
*Addition of the High Output Kit (700RBHTK) is required to run the system in High tips level setting.

700 Pulsing Solenoid- Round Balers

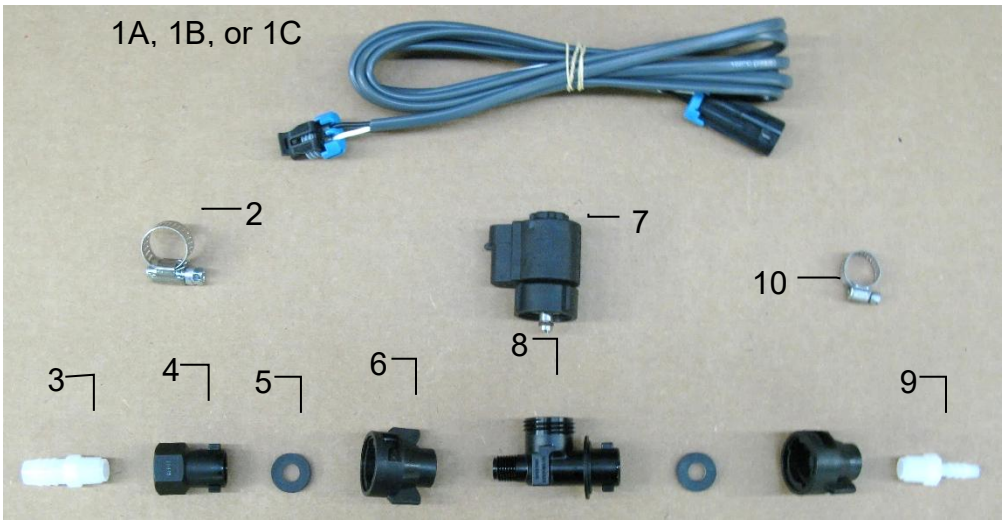

Solenoid Packages

Ref	Description	Part #	Qty
1A	Solenoid Harness (5')	006-3650-S1	
1B	Solenoid Harness (10')	006-3650-S2	
1C	Solenoid Harness (15')	006-3650-S3	
2	#6 Hose Clamp	003-9003	1
3	1/4"x1/2" Straight Fitting	003-A1412	1
4	1/4" Female Connector	004-1207G	1
5	Rubber Washer	004-1207W	2

Ref	Description	Part #	Qty
6	1/4" Female Disconnect	004-1207H	2
7	Solenoid	002-2203F	1
8	Solenoid Valve Body	004-1207VF	1
9	1/4" x 1/4" Straight Fitting	003-A1414	1
10	Mini Hose Clamp	003-9002	1

Complete Assembly Pkg. A	SOL-3SP-A
Complete Assembly Pkg. B	SOL-3SP-B
Complete Assembly Pkg. C	SOL-3SP-C

Expanded View of Pulsing Solenoid (002-2203F)

Replacement Pulsing Solenoid O-Ring Kit available (002-2203FG)
(Includes EPDM O-Rings 6, 8, 9 shown below)

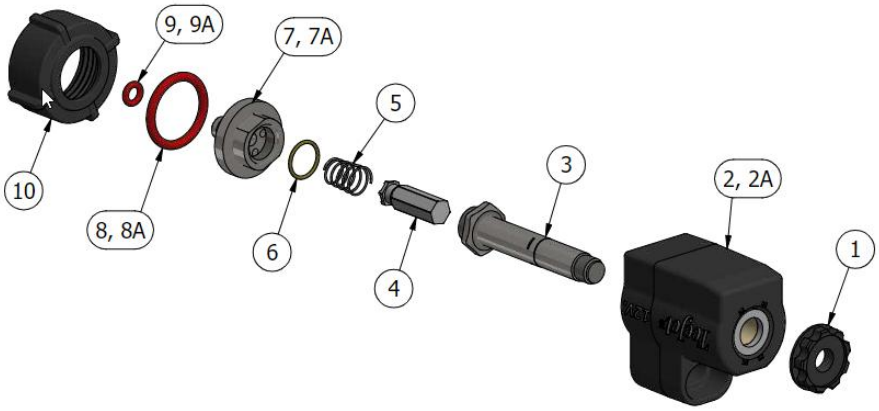

To clean solenoid valves:
The Center Section can be removed from Housing #2 by loosening #1 from #3. Once removed, use wrenches on components #3 and #7 and gently turn to loosen and separate. Soak parts #3-10 in warm soapy water, clean with a soft bristle brush, rinse with clean water to remove buildup before reassembly.

High Output Tip Kit – 700RBHTK

For Optional use with 700 Series Round Baler Applicators

Solenoid Installation

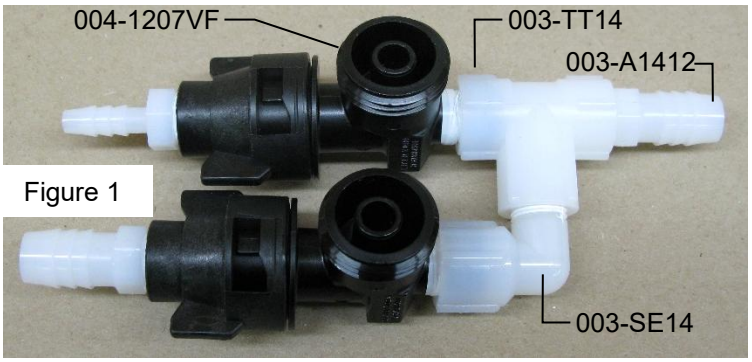

Figure 1

Locate solenoid on current system and connect 1/4" Tee (003-TT14) to the solenoid valve body (004-1207VF). Connect 1/4" x 1/2" straight fitting (003-A1412) to opposite end of the tee, in line with valve body. 1/2" hose from the pump will connect to this straight fitting.

Attach 1/4" street elbow (003-SE14) to the open tee end. Connect the second solenoid valve body to the 1/4" street elbow. Connect female quick coupler (004-1207H) to solenoid valve body. Washer (004-1207W) must be properly seated inside coupler fittings before connected to solenoid valve body. Second 1/4" x 1/2" straight fitting (003-A1412) attaches to female quick coupler. Solenoid valve bodies should now look similar to Figure 1.

Attach 1/2" hose (002-9001) to the 1/4" x 1/2" straight fitting (003-A1412) from the 700RBHTK. Install the original solenoid and the new solenoid (002-2203F) to solenoid valve bodies as shown in Figure 2.

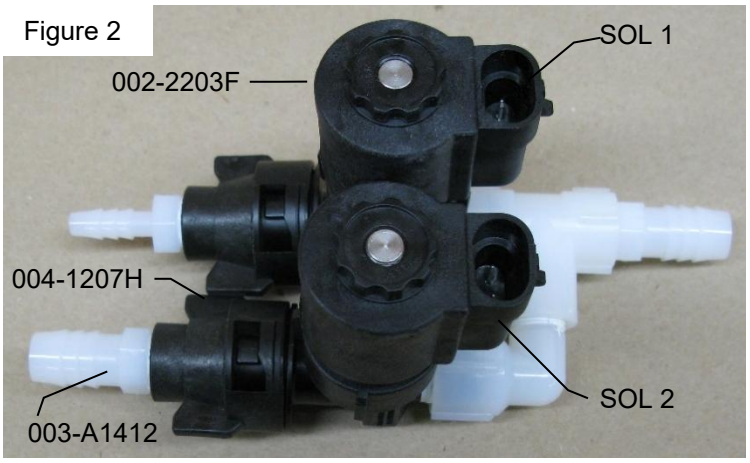

Figure 2

Reconnect solenoid harness (006-3650-S2) to the original solenoid (SOL 1). Ensuring that the opposite end of the harness is connected to the 'Sol 1' connection on the baler harness.

Connect solenoid harness (006-3650-S2) from 700RBHTK kit to the new solenoid (SOL 2) and connect the opposite end to the 'Sol 2' connection on the baler harness.

Tip Installation

The 700RBHTK kit includes two different tip styles. Locate the tips that are the same style used with current system. Non-threaded tips will require use of the additional tip mounting components.
Example: nozzle body (004-4722), tip screens (004-1203-100), white Tip (004-XR11008VS), and nozzle body cap (004-4723) will be used together to make one tip assembly.

***Note:** The 700RBHTK containing parts to fit all styles of round baler 700 Auto Applicator kits. Not all tip components of this kit will be used. Refer to parts breakdown for all parts included with kit.

Balers with Manifold Blocks

Remove Spray manifold blocks (001-4435NSB) from any spray shield/mounting brackets and install straight fitting (003-A1412) to the open port that is to the inside of the original installed straight fitting. Install new tip (004-T8008-PT) into spray manifold block port on the same side as original tip. Place Allen Plug (003-F14A) in the remaining open port (in line with new spray tip). Remove and replace original manifold tip with lower output tip (004-T8004-PT). Reinstall spray block into original spray shield/mounting bracket location. Attach spray line from Sol 2 to the newly installed spray tip port on the manifold block.

Balers with Spray Shields

Below is an illustration of the of a spray shield (Figure 4) showing where the original tips would be located on the 4’ and 5’ (1.2M and1.5M) balers, on the spray shield vertical holes.

Following the same setup currently on your baler for hose length, fittings, and tip style. Add in the additional high output tip (001-XR11008VS or 001-T8008-PT) into the additional mounting holes or on the spray manifold block of the spray shield. Replace original system tips with supplied (001-XR11004VS or 001-T8004-PT) tips. Attach spray line from Sol 2 to the newly installed spray tips.

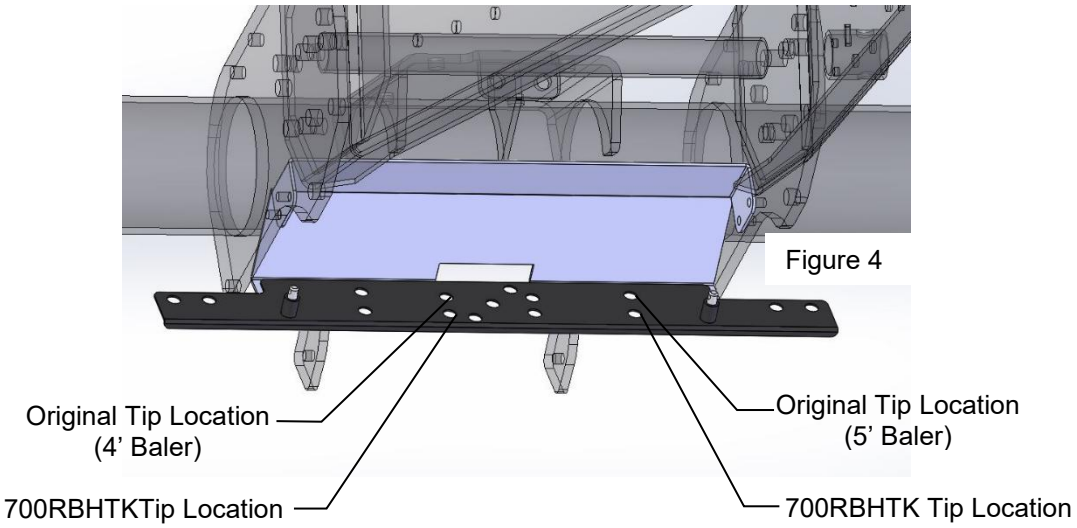

Figure 4

Balers with V Bracket Nozzle Holders

Following the same setup currently on your baler for hose length, fittings, and tip style. Add the additional high output tip (001-XR11008VS) assembly into the additional mounting holes on the V shaped nozzle brackets (001-4714J). Replace original system tips with supplied (001-XR11004VS) tips. Attach spray line from Sol 2 to the newly installed spray tips.

Below is an illustration of the view from below the nozzle holders to show the original single tip setup (Figure 5) and the added Optional High Output Tip Kit (700RBHTK) installed (Figure 6).

Figure 5

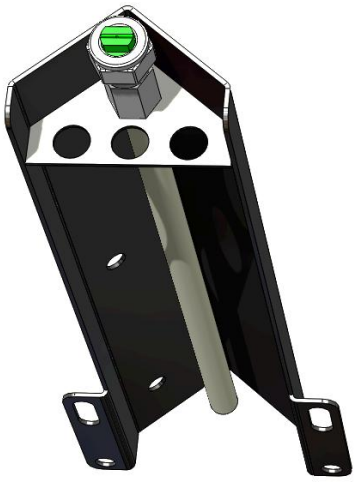

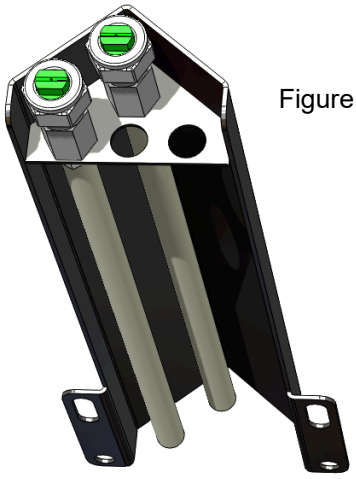

Figure 6

Optional High Output Tip Kit

700RBHTK Breakdown

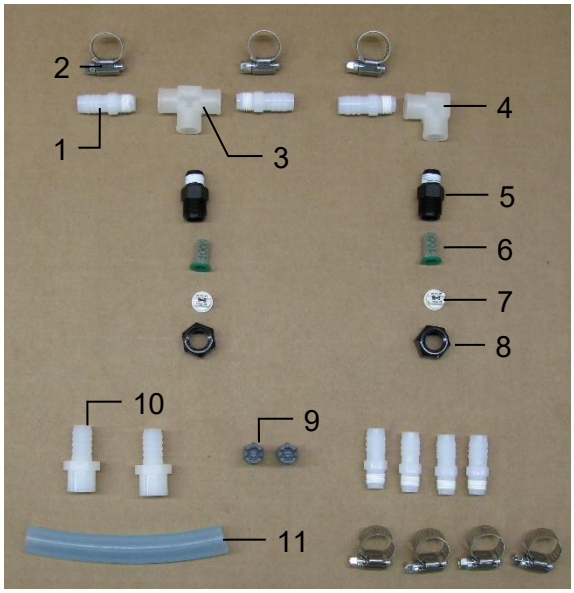

Ref	Description	Part #	Qty
1	1/4" x 1/2" Straight Fitting	003-A1412	7
2	#6 Hose Clamp	003-9003	7
3	1/4” Tee	003-TT14SQ	1
4	1/4" Sq Elbow	003-SE14F	1
5	Nozzle Body	004-4722	2
6	Tip Screens	004-1203-100	2
7	High Output Tip – White*	004-XR11008VS	2
NP	Low Output Tip - Red*	004-XR11004VS	2
8	Nozzle Body Cap	004-4723	2
9	High Output Tip* - NPT	004-T8008-PT	2
NP	Low Output Tip* - NPT	001-T8004-PT	2
10	1/4" x 1/2" Sq Fitting	003-A1412F	2
11	1/2" Hose	002-9001	6ft
NP	Plug	003-F14A	2

*Tip colors subject to change

High Output Solenoid

(Included with 700RBHTK Kit)

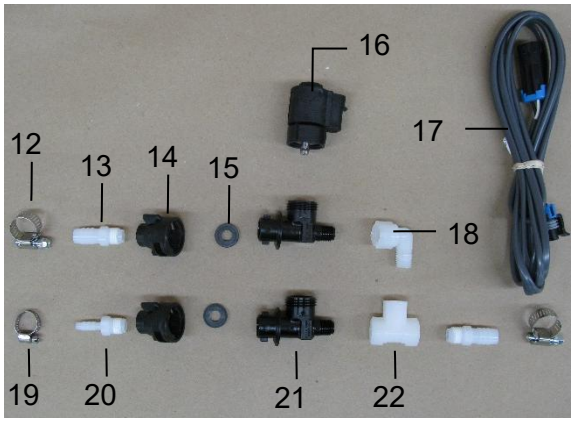

Ref	Description	Part #	Qty
12	#6 Hose Clamp	003-9003	2
13	1/4" x 1/2" Straight Fitting	003-A1412	2
14	Female Quick Coupler	004-1207H	2
15	Rubber Washer	004-1207W	2
16	Solenoid	002-2203F	1
17	Solenoid Harness (10’)	006-3650-S2	1
18	1/4" Street Elbow	003-SE14	1
19	Mini Hose Clamp	003-9002	1
20	1/4" x 1/4" Straight Fitting	003-A1414	1
21	Solenoid Check Valve	004-1207VF	2
22	1/4" Tee	003-TT14	1

Main Wire Harness and Connections

Route harness (006-763B) along the draw bar towards the IPM location on the baler. Keep harness away from pinch points, moving parts and hydraulic hoses. Secure with existing cable clamps or use cable ties. Once all sensor connections are made to the harness, connect to the IPM module. Locate suitable locations on the baler to secure any excess harness lengths and sensor wires- shortening or modification is not recommended and will void system warranty.

Control Box and Wiring Harnesses (030-763CPA)

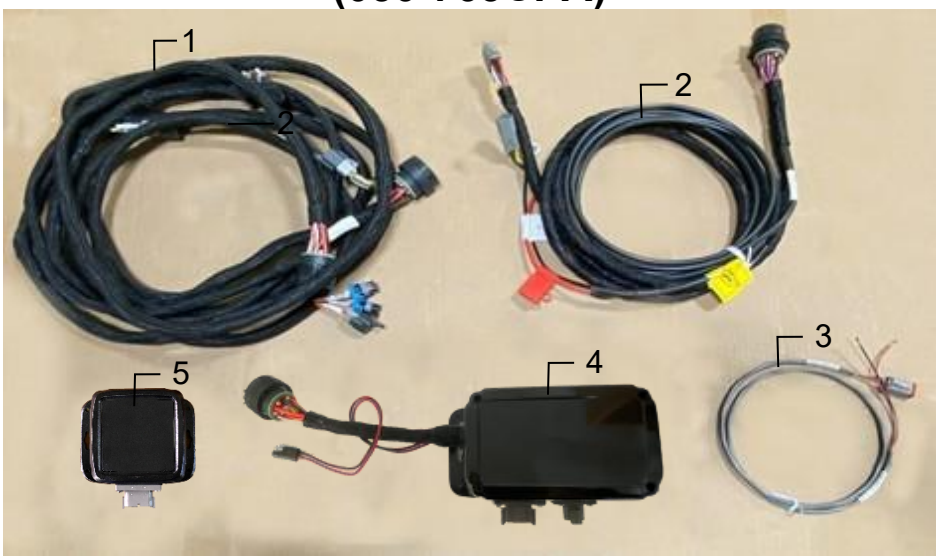

Ref	Description	Part#	Qty	Ref	Description	Part#	Qty
1	Baler Harness - 20’	006-762B	1	NP	120 Ohn Resistor	006-700R*	1
2	Tractor Harness	006-765IC	1	NP	Dust Plug Kit	006-765DP	1
3	Key Switch Wire	006-765CPH	1				
4	ISO Pump Module (IPM)	006-7671RB	1	NP	Lightning to USB-A Communication Cable	006-6672USBC	
5	ISO Communication Module (ICM)	006-6673	1	NP	Optional USB-C to USB-A Communication Cable	006-6672USBX	

*006-700R installation on 006-762B harness is required at all times when operating the small square 700 series applicator

Tractor Setup

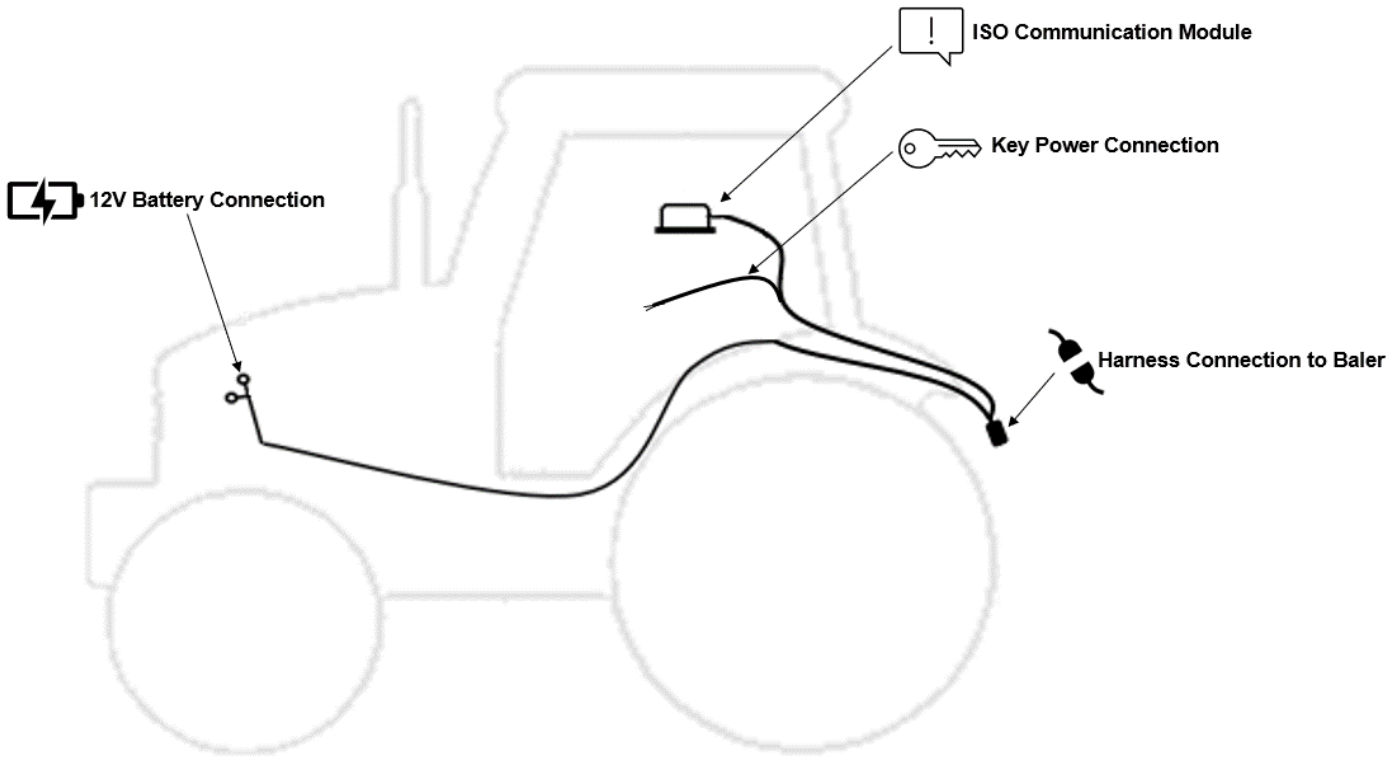

The general tractor setup of the 700 Series applicator can be seen above. The main harness is the tractor power/communication harness (006-765IC). This harness will connect directly to the tractor battery, to the ISO Communication Module (ICM) mounted in the cab, to a keyed power connection point, and connects at the hitch area to the baler power/communication harness of the applicator system.

12V Battery Connection

The 12V battery connection must be at the tractor battery. Connection to alternative locations such as an accessory port can cause problems with applicator system. ***MUST BE CONNECTED DIRECTLY TO TRACTOR BATTERY TERMINALS***

ISO Communication Module

The ISO communication module is to be mounted inside the cab. Other mounting locations can lead to issues with weathering and operation. Once installed and the system is powered, a green light will turn on with the ICM module.

Key Power Connection

Ensure a solid keyed connection is found inside the cab and wired into. Poor keyed power connection can result in applicator system issues.

Harness Connection to Baler

The tractor harness connects at the hitch to baler power/communication harness. This will allow the system components to communicate with one another. Ensure connections are debris and corrosion free.

Display Options

Optional Harvest Tec Display

The 700 series Harvest Tec Display will allow you to set your real time baling parameters to ensure the most precise application to every bale. This is done by utilizing the improved touch technology to select objects, enter data, and swipe through operational screens.

The Harvest Tec Display offers easy integration by connecting to the additional CAN plug on the 006-765IC harness. Once, connected the Harvest Tec display will power up with applicator system.

Note: The Harvest Tec Display must be used as a standalone display, the baler cannot run both integrated and on the Harvest Tec Display. Must be one or the other. Removal of the 006-765VA or 006-765VAU (UHD balers) integration harness is required when equipped.

Optional Tablet Display

Precision Baling App

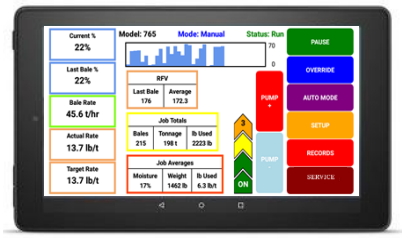

The iOS or Android Tablet displays offer the ability to communicate with the 700 series applicator system via hard-wired connection to the ISO Communication Module (ICM). Through the free Precision Baling App, the operator can set real time baling parameters to ensure the most precise application to every bale. This provides a multi-use option while utilizing the improved app to select objects, enter data, and easily switch through operational screens.

The Tablet Display offers easy integration by connecting a data transfer/charging cable to the USB port on the ICM module (USB port closest to LED light). The Harvest Tec Applicator will display upon opening the app and powering up the applicator system when connected. Tablets can be used in addition to ISO integrated baler VT display.

***Made for iPad® (iOS 15 or higher) or Android Tablet (Does not work with Amazon Fire).**
Required to be running the most current operating system or one version previous.
iPads 10+ years are no longer supported by Apple and are unable to download app.

*iPad is a trademark of Apple Inc., registered in the U.S. and other countries.

Optional Harvest Tec Display Kit (030-7670DK)

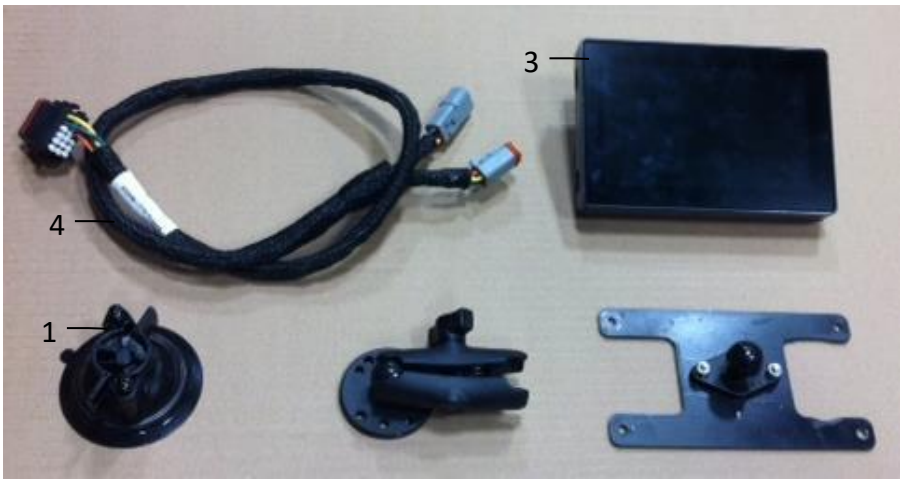

Ref	Description	Part #	Qty
1	Suction Cup Mount	001-2012SCM	1
2	Ram Mount	001-2012H	1
3	Harvest Tec Display	006-765GVT	1
4	Display Harness	006-765GH	1
5	Mounting Plate	001-700GH	1
NP	700 Series Resistor	006-700R	1

Complete HT Display Kit 030-7670DK

Installation Instructions

1. Connect 006-765GH harness connection to 006-765IC tractor harness key power plug.
2. Connect 006-765GH harness to the Harvest Tec VT Display before tightening mount in place.
3. Tighten the mounting and display. Streamline harness as necessary.
4. Once connected, power cycle the system and ensure display is working properly.

NOTE: CANNOT OPERATE APPLICATOR SYSTEM WITH HARVEST TEC DISPLAY AND BALER ISO INTEGRATION or TABLET/ iPad AT THE SAME TIME.

Optional Android Display Kit (030-1670DK)

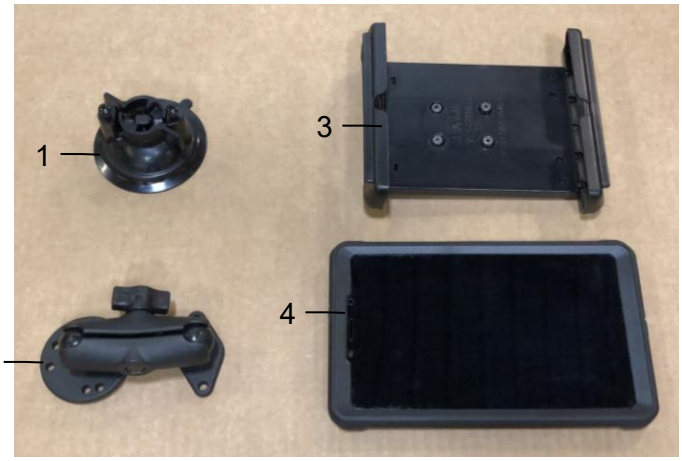

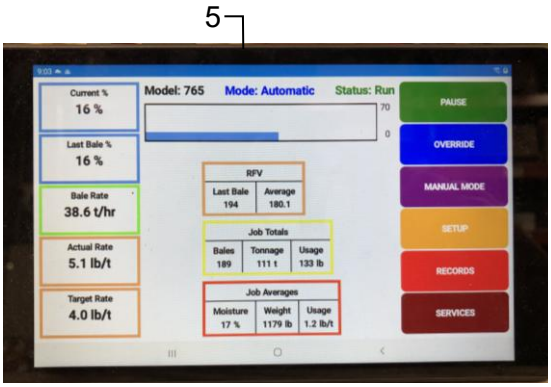

Ref	Description	Part #	Qty
1	Suction Cup Mount	001-2012SCM	1
2	Ram Mount	001-2012H	1
3	Spring Load Cradle	001-2012SLC	1
4	Android Case	001-2012A1	1
5	Android Tablet	006-1670AT	1
NP	USB-C to USB-A Cable	006-6672USBX	1

Complete Android Tablet Display Kit **030-1670DK**

Note: Use a quality communication cable ending with a USB-A connection to connect tablet to (006-765ICM) control module - plug into the USB port showing a tablet.

Optional iPad Display Kit (030-6670DK)

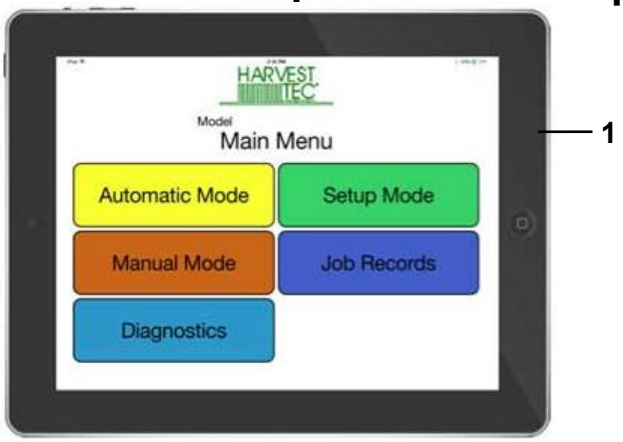

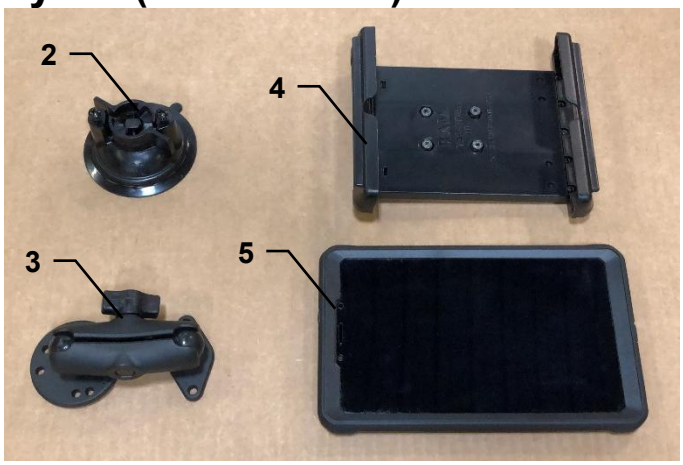

Ref	Description	Part #	Qty
1	iPad Mini 6	006-6670IP	1
2	Suction Cup Mount	001-2012SCM	1
3	Ram Mount	001-2012H	1
4	Spring Load Cradle	001-2012SLC	1
5	iPad Mini 6 Case	001-2012C6	1
NP	Power/Comm. Cable	006-6672USBX	1

Complete iPad Mini Display Kit **030-6670DK**

iPad mini is a trademark of Apple Inc., registered in the U.S. and other countries

Optional ISO Display Adapter Harness (006-7670A or 006-7670F)
For use with a dedicated ISO display

The 700 Series Applicator has the option to tie into compatible dedicated ISO monitors by utilizing the diagnostic port. When connected, the Harvest Tec System will populate as its own object pool within the ISO display. When this object pool is selected, the ISO monitor will then function as a dedicated monitor for the Harvest Tec System.

The Harvest Tec System will function as a stand-alone system when using this adapter.
System will not integrate with the baler ISO system software when using this adapter.

Any tablet connected to the ICM module must be disconnected from the ICM before the Harvest Tec Object Pool screen will activate within the ISO display.
To connect Adapter Harness (006-7670A or 006-7670F), unplug the 4-pin Key Power Plug (006-765CPH) connection from the Tractor Harness (006-765IC) and replace with the plug from the Adapter Harness. Connect the round plug end of the Adapter Harness to the Tractor ISO Display Diagnostic port.

Scan the QR code to view a short video of the Adapter Harness for ISO Display:

For additional product and service information:
See our YouTube Channel https://www.youtube.com/@harvesttec

ISO Diagnostic Port Adapter (006-7670A)

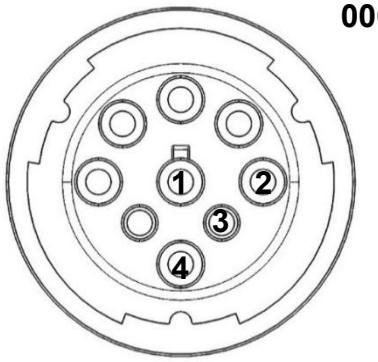

006-7670A connecting plug and pin

Pin 1	Black	Ground
Pin 2	Yellow	CAN High
Pin 3	Green	CAN Low
Pin 4	Red	12V+ Key Power

ISO Diagnostic Port Adapter (006-7670F)
For Newer Fendt and MF Tractors with plug location in the cab ceiling

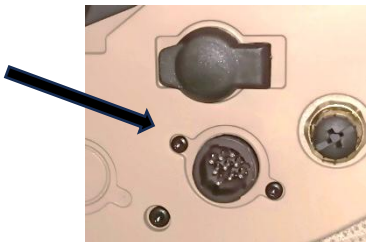

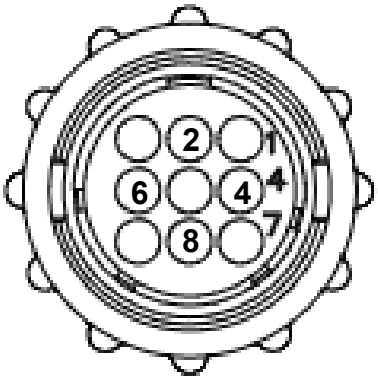

006-7670F connecting plug and pin

Pin 8	Black	Ground
Pin 4	Yellow	CAN High
Pin 2	Green	CAN Low
Pin 6	Red	12V+ Key Power

Wiring Diagram – 700 Series Round Balers

1. Connect the power harness (006-765IC) to the tractor battery (12 volt) using the red wire with fuse to the positive side and the black wire to the negative.
   A. **The power harness must be connected to the battery!**
      CONTACT HARVEST TEC BEFORE MODIFICATIONS.
      The unit will draw more amps than convenience outlets can handle. Any modifications of the power harness will void systems warranty
   B. **This unit will not function on positive ground tractors.**
   C. **If the unit loses power while operating it will not keep track of accumulated pounds of product used.**
2. The power harness on the tractor (006-765IC) will run from the tractor battery to the hitch. The power harness on the baler (006-763B) will connect to the tractor power harness (006-765IC) at the hitch.
3. Connect the keyed power wire (006-765CPH) to a keyed power source on the tractor.
   The keyed power wire must connect to a keyed source or the unit will not power up correctly.
4. Attached the ISO Communication Module (006-6673) to the tractor power harness (006-765IC).
5. Attach the End of Bale (EOB) connection on baler harness (006-763B) to the EOB Sensor (006-7401).
6. Attach the Solenoid (SOL 1) connections on the baler harness (006-763B) and to the solenoids (002-2203F).
7. Attach the Flowmeter (006-4724A) to the Pump Module connection on pump plate assembly.
8. Attach the rubber molded connector on pump plate to the Pump (007-4120DE).
9. Attach moisture disc harness (006-7307RB) connection to the IPM and connect to Moisture Discs
10. Ensure 006-700R terminator is connected to CAN/IDM port on 006-763B harness

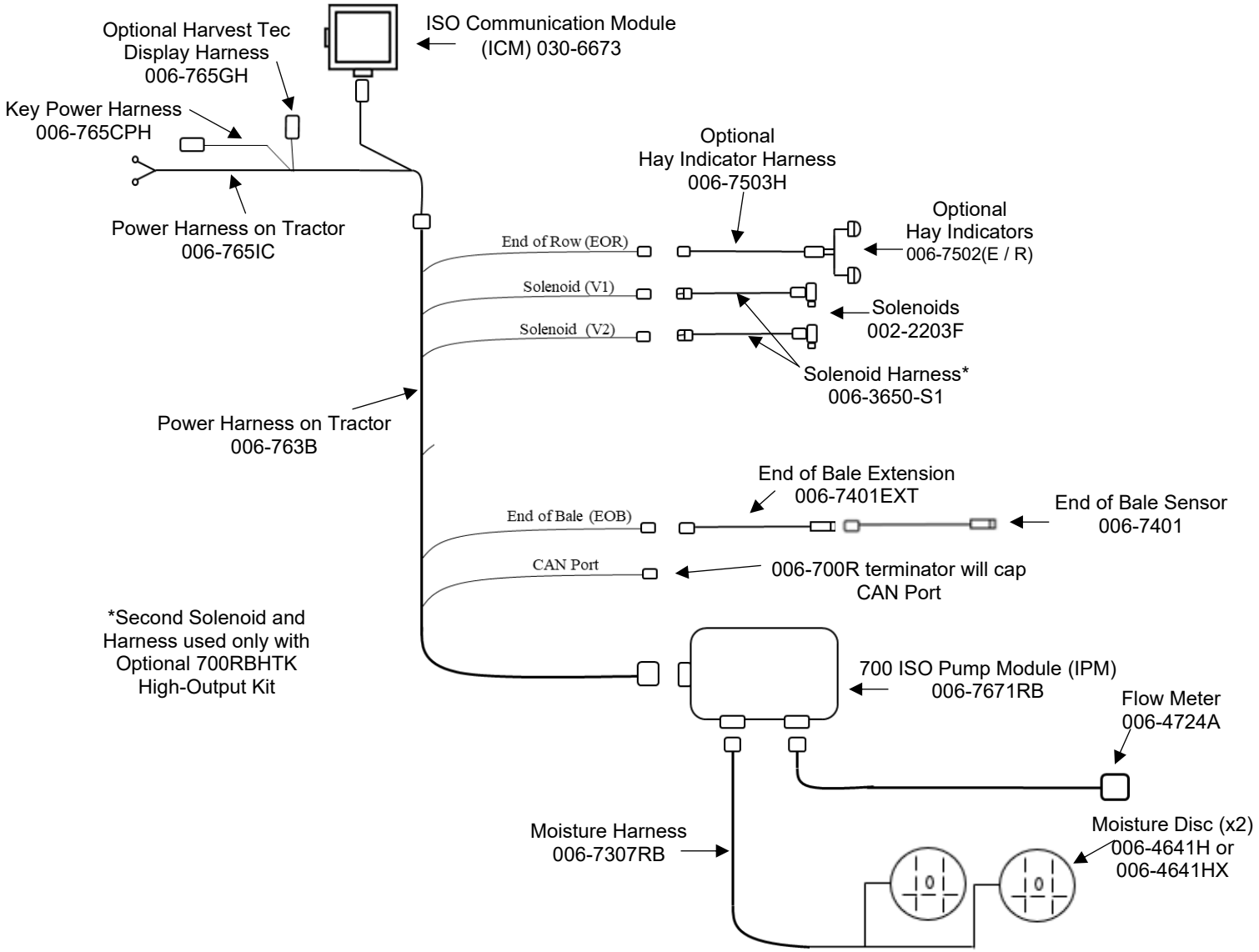

Pin Outs

Integrated Control Module (ICM) on Tractor Harness 006-765IC

(Deutsch Plug Number: DTM06-12SA)

Pin 1	Red	+12V from ECU
Pin 2	Purple	Signal Wire
Pin 3	Red/White	+12V CAN X
Pin 4	Black/White	Ground CAN X
Pin 5	Orange	CAN X Hi
Pin 6	Blue	CAN X Lo
Pin 7	Green	ISO CAN Lo
Pin 8	Yellow	ISO CAN Hi
Pin 9	White	GPS Expansion 1
Pin 10	Gray	GPS Expansion 2
Pin 11	Brown	GPS Expansion 3
Pin 12	Black	Ground from ECU

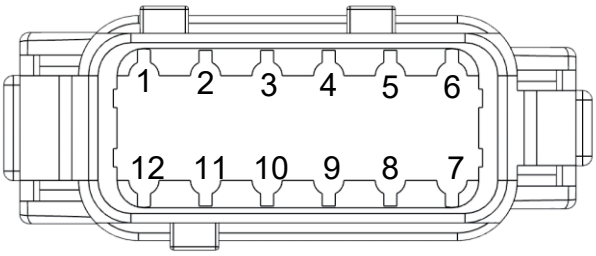

ISOBUS Plug on Tractor Harness 006-765IC

(Deutsch Plug Number: DT04-4P)

Pin 1	Red	+12V from ECU
Pin 2	Yellow	ISO CAN Hi
Pin 3	Green	ISO CAN Lo
Pin 4	Black	Ground from ECU

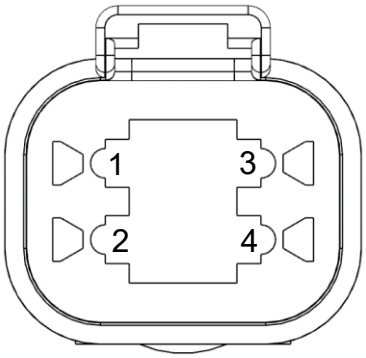

Power / Communication Tractor Harness 006-765IC at Hitch

(Deutsch Plug Number: HDP24-24-18PN)

Pin 1	Not Used	----
Pin 2	Yellow	ISO CAN Hi
Pin 3	Green	ISO CAN Lo
Pin 4	Red	+12V Power to ECU
Pin 5	Black	Ground to ECU
Pin 6	Red	+12V From Battery
Pin 7	Not Used	----
Pin 8	Black	Ground From Battery
Pin 9	Not Used	----
Pin 10	Purple	Signal Wire
Pin 11	Red/White	+12V CAN X
Pin 12	Black/White	Ground CAN X
Pin 13	Orange	CAN X Hi
Pin 14	Blue	CAN X Lo
Pin 15	White	GPS Expansion 1
Pin 16	Gray	GPS Expansion 2
Pin 17	Brown	GPS Expansion 3
Pin 18	Not Used	----

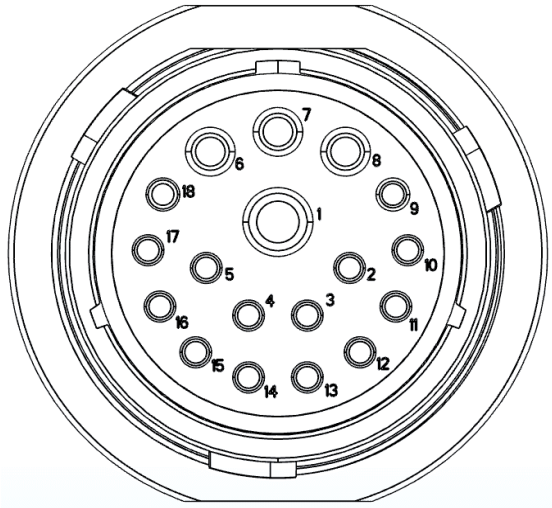

Pin Outs (continued)

Power / Communication Baler Harness 006-763B at Hitch
(Deutsch Plug Number: HDP26-24-18SN)

Pin 1	Not Used	----
Pin 2	Yellow	ISO CAN Hi
Pin 3	Green	ISO CAN Lo
Pin 4	Red	+12V Power to ECU
Pin 5	Black	Ground to ECU
Pin 6	Red	+12V From Battery
Pin 7	Not Used	----
Pin 8	Black	Ground From Battery
Pin 9	Not Used	----
Pin 10	Not Used	----
Pin 11	Not Used	----
Pin 12	Not Used	----
Pin 13	Not Used	----
Pin 14	Not Used	----
Pin 15	Not Used	----
Pin 16	Not Used	----
Pin 17	Not Used	----
Pin 18	Not Used	----

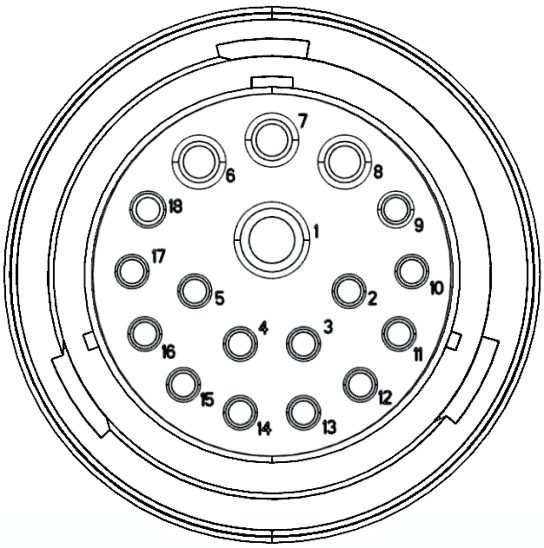

Power / Communication Baler Harness 006-763B at IPM Module
(Deutsch Plug Number: HDP24-24-18PN)

Pin 1	Not Used	----
Pin 2	Yellow	ISO CAN Hi
Pin 3	Green	ISO CAN Lo
Pin 4	Red	+12V Power to ECU
Pin 5	Black	Ground to ECU
Pin 6	Red	+12V From Battery
Pin 7	Not Used	----
Pin 8	Black	Ground From Battery
Pin 9	Not Used	----
Pin 10	Orange/White	+12V Power to EOR
Pin 11	Orange/Black	Ground to EOR
Pin 12	Purple/Green	EOR Signal
Pin 13	Blue/White	EOB Signal
Pin 14	Gray/Red	+12V Power to Solenoid 1
Pin 15	White/Black	Ground to Solenoid 1
Pin 16	Orange/Red	+12V Power to Solenoid 2
Pin 17	White/Black	Ground to Solenoid 2
Pin 18	Not Used	----

*IPM Module Whip Plug- Pin # 5 Not Used

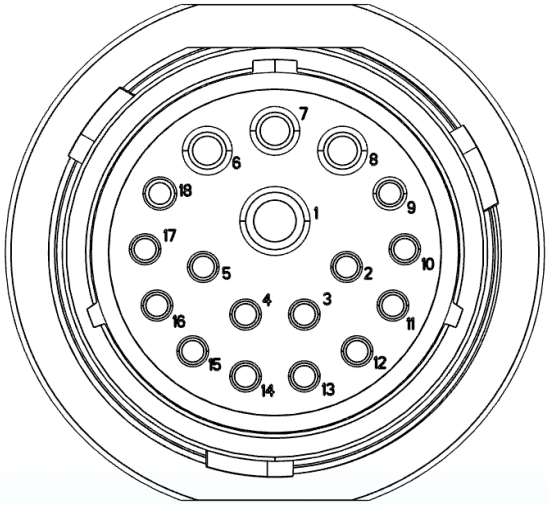

Solenoid 1 Plug on Baler Harness 006-763B
(Deutsch Plug Number: APTIV 12052641)

Pin B	Gray/Red	+12V to Solenoid 1
Pin A	White/Black	Ground to Solenoid 1

Solenoid 2 Plug on Baler Harness 006-763B
(Deutsch Plug Number: APTIV 12052641)

Pin B	Orange/Red	+12V to Solenoid 2
Pin A	White/Black	Ground to Solenoid 2

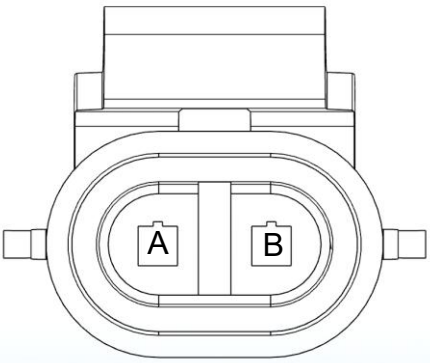

Pin Outs (continued)

CAN / IDM on Baler Harness 006-763B
(Deutsch Plug Number: DT06-4S)

Pin 1	Red	+12V to ECU
Pin 2	Yellow	ISO CAN Hi
Pin 3	Green	ISO CAN Lo
Pin 4	Black	Ground to ECU

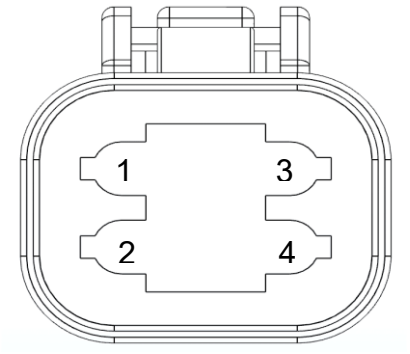

End of Bale Sensor Plug on Baler Harness 006-763B
(Deutsch Plug Number: DT06-3S)

Pin 1	Orange/White	+12V to End of Bale Sensors
Pin 2	Orange/Black	Ground to End of Bale Sensors
Pin 3	Blue/White	Signal

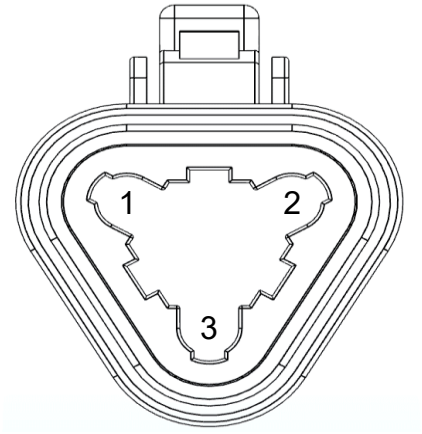

End of Row Sensors Plug on Baler Harness 006-763B
(Deutsch Plug Number: DT06-3S)

Pin 1	Orange/White	+12V to End of Bale Sensors
Pin 2	Orange/Black	Ground to End of Bale Sensors
Pin 3	Purple/Green	Signal

Pump Connection on 700 Controller Harness
(16 AWG Two-Wire Plug)

Pin 1	Red	Power to Pump
Pin 2	Black	Ground to Pump

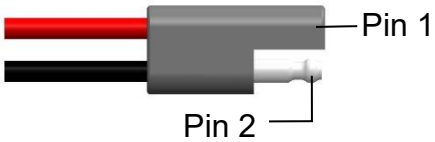

Harvest Tec LLC. Warranty and Liability Agreement

Harvest Tec, LLC. will repair or replace components that are found to be defective within 12 months from the date of manufacture. Under no circumstances does this warranty cover any components which in the opinion of Harvest Tec, LLC. have been subjected to negligent use, misuse, alteration, accident, or if repairs have been made with parts other than those manufactured and obtainable from Harvest Tec, LLC.

Our obligation under this warranty is limited to repairing or replacing free of charge to the original purchaser any part that in our judgment shows evidence of defective or improper workmanship, provided the part is returned to Harvest Tec, LLC. within 30 days of the failure. If it is determined that a non-Harvest Tec manufactured product has been used inside the Harvest Tec applicator system where the failure occurred, then Harvest Tec reserves the right to deny the warranty request at their discretion. Parts must be returned through the selling dealer and distributor, transportation charges prepaid.

This warranty shall not be interpreted to render Harvest Tec, LLC. liable for injury or damages of any kind, direct, consequential, or contingent, to persons or property. Furthermore, this warranty does not extend to loss of crop, losses caused by delays or any expense prospective profits or for any other reason. Harvest Tec, LLC. shall not be liable for any recovery greater in amount than the cost or repair of defects in workmanship.

There are no warranties, either expressed or implied, of merchantability or fitness for particular purpose intended or fitness for any other reason. This warranty cannot guarantee that existing conditions beyond the control of Harvest Tec, LLC. will not affect our ability to obtain materials or manufacture necessary replacement parts.

Harvest Tec, LLC. reserves the right to make design changes, improve design, or change specifications, at any time without any contingent obligation to purchasers of machines and parts previously sold.

Revised 1/24

HARVEST TEC, LLC.
P.O. BOX 63
2821 HARVEY STREET
HUDSON, WI 54016 USA
PHONE: 715-386-9100
FAX: 715-381-1792
Email: info@harvesttec.com