Installation Manual

Model 796M

110 Gallon Preservative Applicator
for Agco, Massey Ferguson, Challenger
ISOBUS Large Square Balers

HarvestTec®

EST. 1976

796M-26-INST
9/26

Table of Contents

	Page
Introduction	**3**
System Overview	**4**
Tank and Tank Saddle	**5-7**
Pump Plate	**8-9**
Drain / Fill Kit	**10**
Parts Bag Breakdown and Hoses	**11**
Spray Shields	**12-18**
4518C	12
4519C	13
4527C	14
4530C	15
4542C	16-17
4544C and 4550C	18
Solenoids	**19-20**
Main Harness	**21-23**
Controls	**23**
Moisture Sensors	**24-25**
End of Bale (EOB)	**26**
Tractor Setup	**27**
Display Options	**28-37**
HT VT Display Kit	29
Android Tablet Display Kit	30
iPad Display Kit	30
ISO Display Adapter	31
Baler ISO Display Integration	32-37
Wire Diagram	**38**
Pin Outs	**39-41**
Warranty Statement	**42**

Introduction

Thank you for purchasing the 700 Series Preservative Applicator. This applicator system has been designed to be operated through a number of different displays and tablets using the Precision Baling App. These include the Harvest Tec VT display, the baler's ISOBUS and display on the baler monitor (if compatible/applicable), or iOS/Android Tablet (not included).

The 700 Series Preservative Applicator System is designed to apply Baler's Choice buffered propionic acid (made by Harvest Tec) to the forage crop as it is baled. **Use of alternative products may cause system complications and voids Harvest Tec manufacturer's warranty.** Failure to follow instructions can result in personal injury or equipment malfunction. If you need parts for the system, please view the Parts Breakdown within this manual and contact your local authorized dealer to order replacement parts.

Right and Left sides are determined by facing in the direction of forward travel.

System Requirements

C1000 must have version 3.0.1 or higher

The Baler Processor must have Version 3.3 or higher.

Made for Harvest Tec Display, Baler Integration, or Tablet

For best performance ensure all displays are running the latest operating system

System Overview

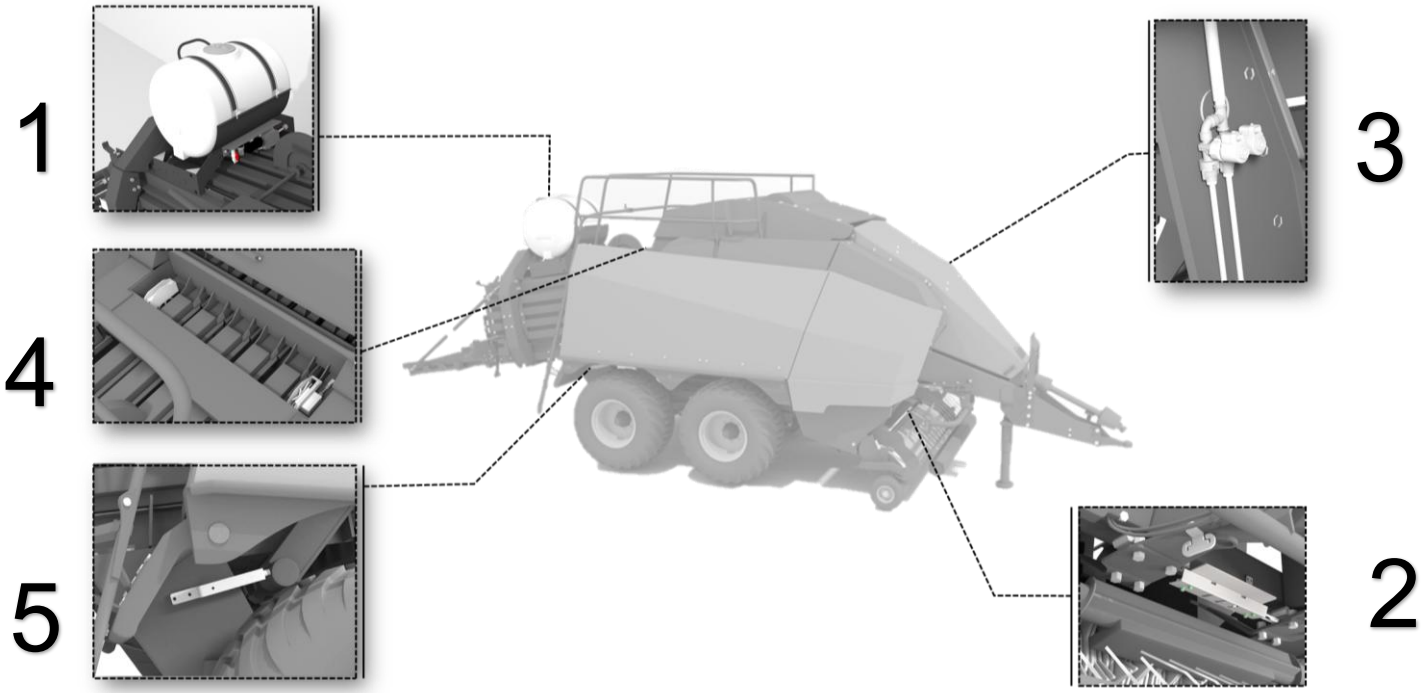

The 700 series applicator system consists of five main areas of installation, these include:

1 - Tank, Saddle, and Pump Installation

This will mount on the bale chute towards the rear of the baler. All mounting and parts should be verified prior to beginning installation. Follow *Installation of Pump Manifold and Saddle* section for step-by-step instruction.

2 - Spray Shield Installation

The spray shield assembly is designed to spray the hay evenly as the baler picks it up. This holds the tips and is connected to plumbing to apply preservative as precisely as possible. Follow the *Spray Shield Installation* section for sketches of the spray shield nozzle holders and step-by-step instruction.

3 - Solenoid Installation

The dual solenoid setup is to be mounted as close to the spray shield as possible. This will provide the best result to ensure the proper output of preservative is applied through the nozzles. View *Spray Shield installation* section for instructions of solenoid mounting.

4 - Star Wheel Installation

This is the moisture setup for the applicator system, installation will be done on top of the bale chamber so the star wheels can make sufficient contact with the bale. Follow *Star Wheel Mounting* sections for step-by-step instruction.

5 - End of Bale Installation

The end of bale sensor determines the position of the needles on the baler. When the needles cycle the sensor communicates this information to the 700 series. Installation of this sensor is required for use with the Harvest Tec Virtual Terminal. Follow *End of Bale Sensor Installation* section for step-by-step guide.

<u>Tank, Tank Saddle Kit</u> (030-0491A-TK)

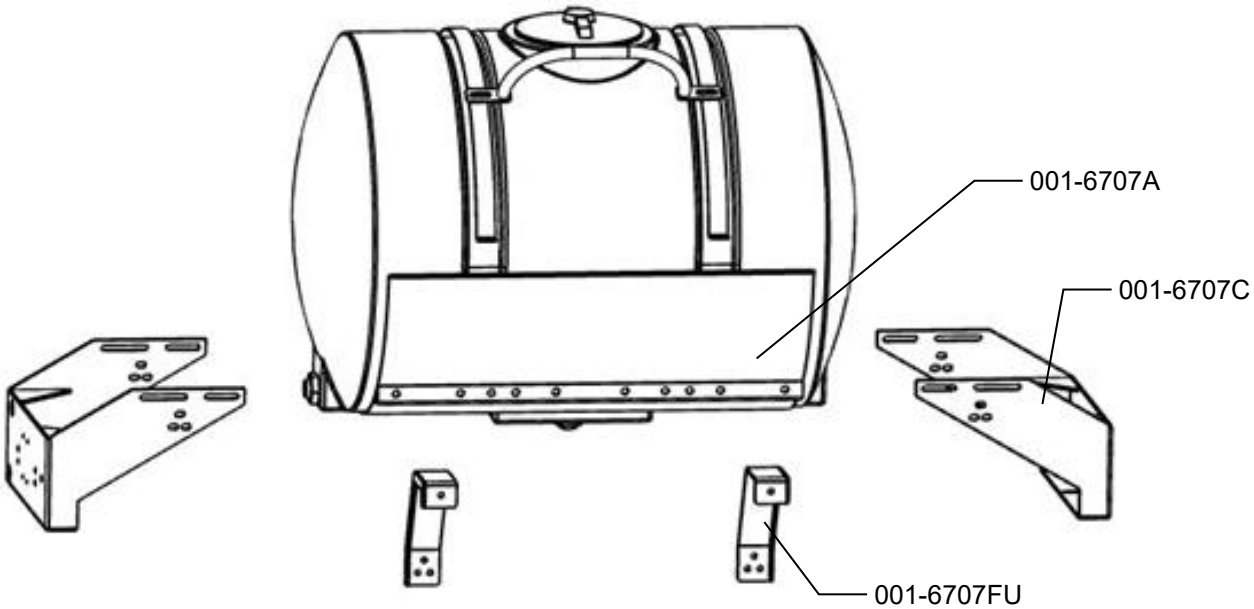

Tank and Saddle Kit Mounting (non-UHD balers)

1. Locate parts bag 2. Install both saddle legs (001-6707C) onto the saddle (001-6707A) with eight 3/8" x 1-1/4" bolts, locks, and flat washers. Note: For 3 x 3 balers the slots in the legs will attach to the second and fourth weld nuts in from each end, of the saddle, on both sides. For 3 x 4 or 4 x 4 balers the slots in the legs will attach to the first and second weld nuts in from each end, of the saddle, on both sides.

2. Once legs and saddle are loosely attached measure the distance from the top outside corners of the bale chamber where the saddle will be attached. Move legs in or out so the outside edges will match this dimension. Also try to center the saddle within these dimensions. <u>Do not fully tighten bolts until mounted on the baler.</u>

3. Locate parts bag 6. Mount the pump plate holders (001-6707FU) to the saddle legs using six 3/8" x 1" bolts, locks, flats, and nuts. Note: This will be the same side as the handrail on the tank.

4. Mount the tank legs and saddle on the baler just behind the compression arm. If holes are not present, mark holes and drill with a 9/16" drill bit. The tank legs bolt to the baler with six ½" x 1 ¾" carriage head bolts, locks, flat washers, and hex nuts. Note: handrail is pointing toward front of baler. Tank cap should be parallel to ground.

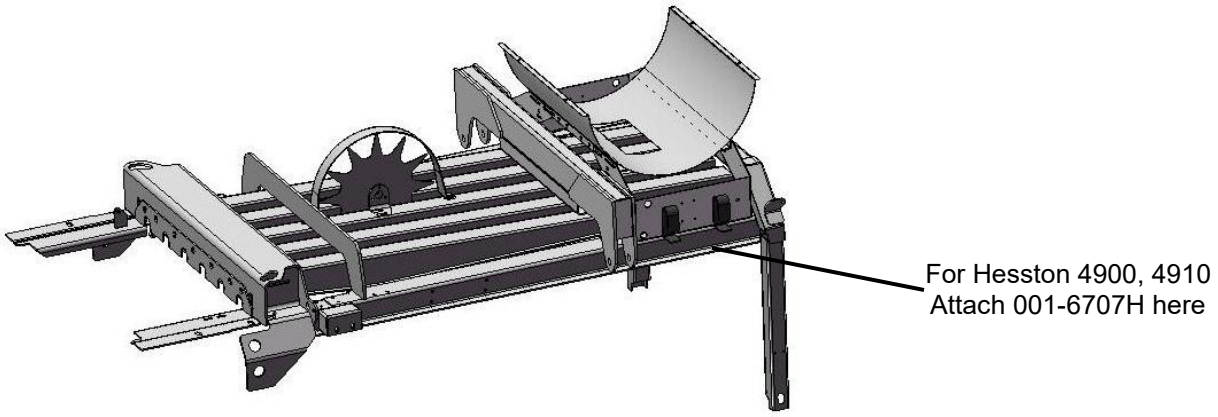

Tank and Saddle Kit Mounting – UHD Baler

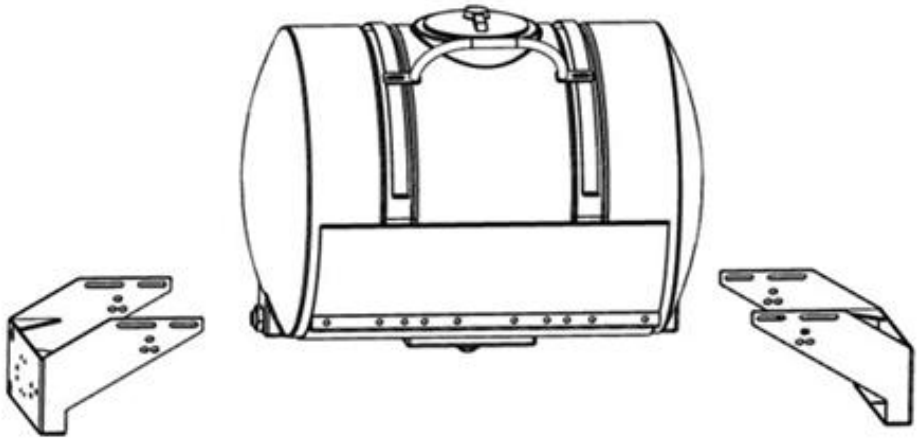

Locate parts bag 2. Mount the tank legs on top of the rectangular tubing as displayed below. There are 3 access holes/side where 1/2" hex bolts can be inserted and held in place as they go through the top of the tube and the leg. IE hole in top of tube is 9/16” (14mm) diameter hole in bottom is 1-1/4” (big enough for socket to hold hex head of bolt).

The saddle is intentionally tipped forward by 5° so that the tank cap will be parallel to the ground. There is a small cut out “V” where the tank sump fits in the saddle and this cut out should face the back of the baler for the tank to be level when installed on the baler

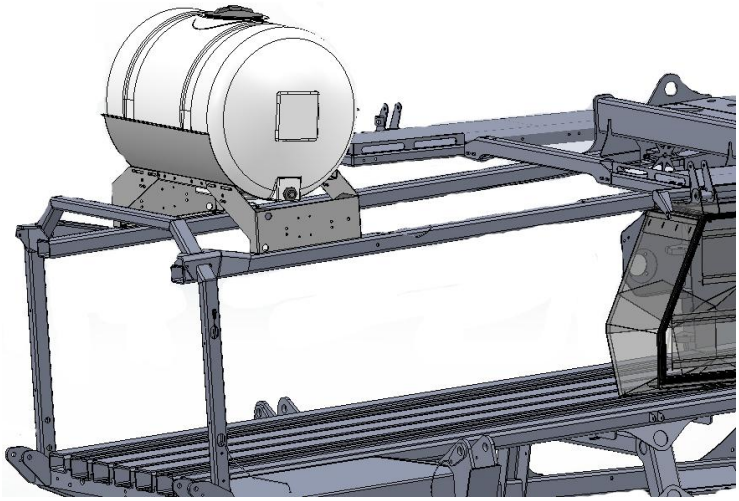

110 Gallon - Tank, Saddle, & Legs

Massey Ferguson, Hesston and AGCO Balers

Tank Lid:
Part#: 005-9022H

Handrail
Part#: 001-6707HR

Tank-110 gallon
Part#: 005-9208

Tank Straps
Part#: 001-4402B

Tank Saddle
Part#: 001-6707A

Tank Fitting
Part#: 005-9100

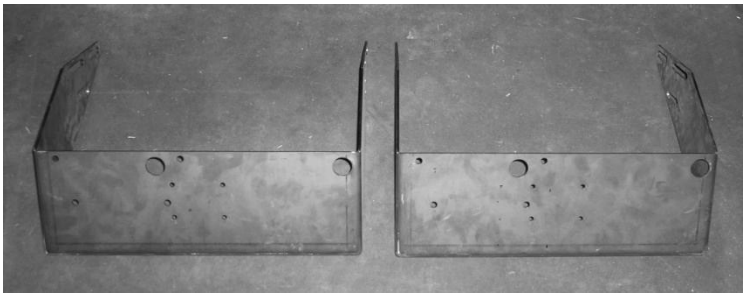

AGCO, Hesston, Massey & Challenger Saddle Legs
Part#: 001-6707C

Complete Tank Saddle Kit
Part# 030-0491A-TK

Pump Plate Mounting

Attach Pump Plate to Tank Saddle – Non UHD Balers (PMP-7636MMT)

1. Attach (001-4648XB) Bracket to pump plate hangers (001-6707FU) with remaining hardware from #6 parts bag.
2. Connect control (006-7671LS) to pump plate (PMP-7636P) with four 10/32” x 5/8” Philips flat head screws and NY lock nuts.
3. Attach pump plate assembly (PMP-7636P) to bracket (001-4648XB) with two 3/8” x 3/4" flange bolts and nuts.

Note: If you are doing an install on a 3” wide baler, do not use the 4648XB bracket.

Do Not Pressure Wash Pump Plate Assembly

Pressure washing the Pump Plate can lead to water damage internally of the ISO Pump Module (IPM).

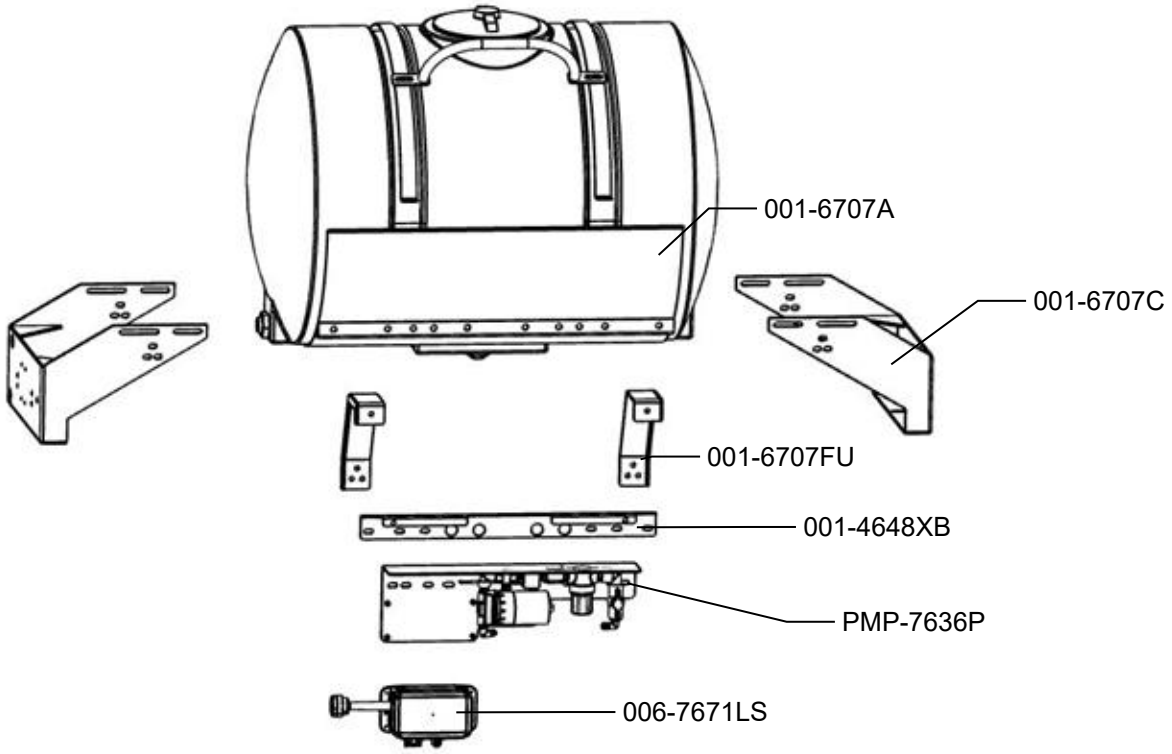

Attach Pump Plate to Tank Saddle – UHD Balers (PMP-7636UMT)

1. Attach UHD pump mounts (001-4648U) to beam in front balers metering star wheel. The Balers handrail mounts to this beam also.
2. Use suppled ½” hardware to mount both brackets to beam. Long leg of (h) should be facing knotters. Do not fully tighten down hardware.
3. Slide brackets apart so top mounting holes in (001-4648H) line up with holes in PMP-7636P pump shield.
4. Use 3/8” x ¾” Flange bolts and Flange nut to secure together.
5. Tighten down all hardware.

Parts Breakdown for Pump Assembly

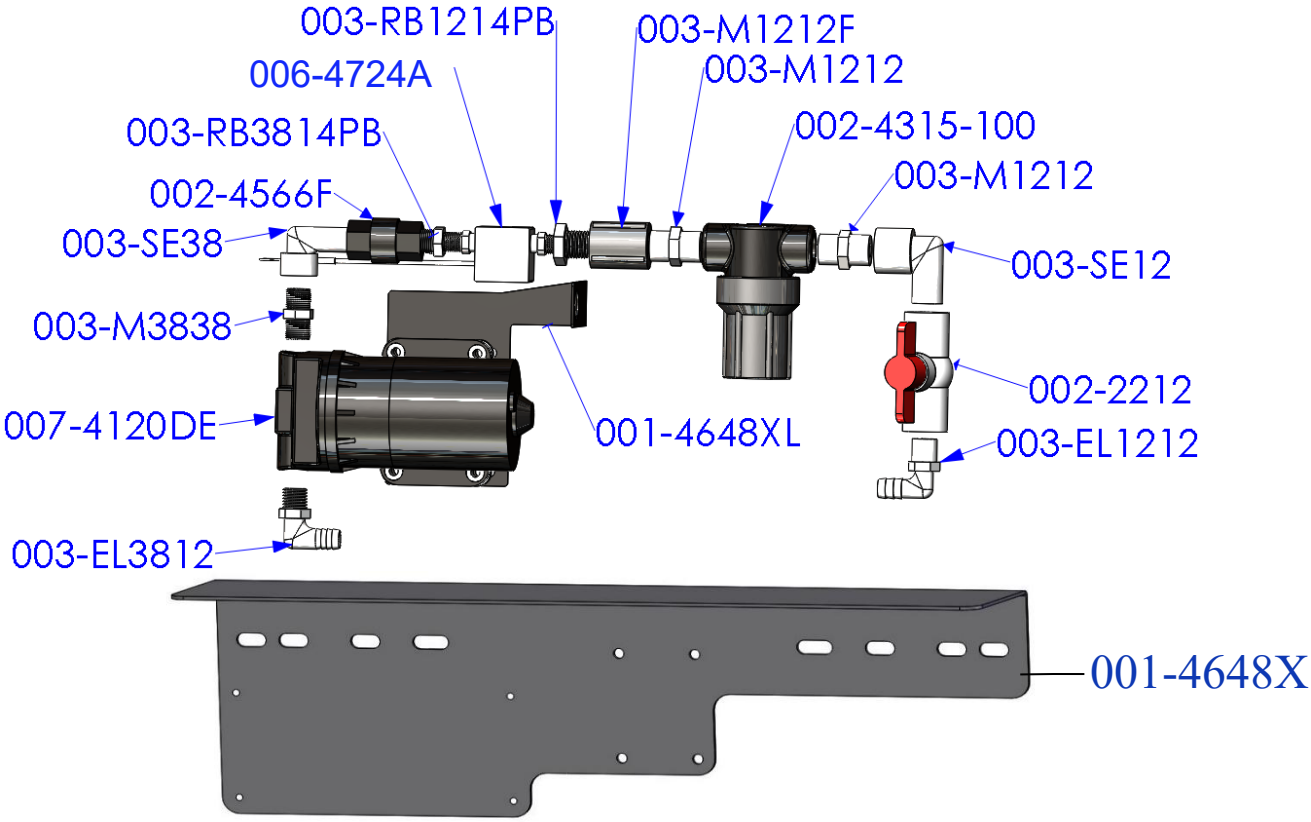

Part#	Description	Qty	Part#	Description	Qty
003-EL3812	3/8”MPT X 1/2"HB Elbow	1	003-M1212	1/2" Union	2
007-4120DE	700/300 Series Pump	1	002-4315-100	1/2" Line Strainer-100 Mesh	1
003-M3838	3/8” x 3/8” Union	1	003-SE12	1/2" Street Elbow	1
003-SE38	3/8” Street Elbow	1	002-2212	1/2" Ball Valve	1
002-4566F	3/8” Check Valve	1	003-EL1212	1/2"MPT x 1/2"HB	1
003-RB3814PB	RB 3/8” x 1/4” Reducer	1	001-4648XL	300 Pump Support	1
006-4724A	Flow Meter-Deutsch Plug	1	001-4648X	Pump Plate Mount	1
003-RB1214PB	RB 1/2" x 1/4" Reducer	1	003-A1212*	1/2" MPTx1/2”HB(Not Pictured)	1
003-M1212F	1/2" Coupler	1	003-A3812*	3/8" MPTx1/2”HB(Not Pictured)	1

*Note: Due to alternative baler designs, elbow 003-EL3812 can be replaced by straight fitting 003-A3812. Elbow 003-EL1212 can also be replaced by straight fitting 003-A1212. Both straight fittings are included.

Filter Bowl Replacement Parts

002-4315F Filter Bowl
002-4315D Filter Bowl Gasket
002-4315A Replacement Screen-100 Mesh
002-4315B Replacement Screen- 80 Mesh

Pump Plate Mounting – PMP-7636MMT

001-4648XB Pump Plate Adapter
001-6707FU Pump Plate Holder (qty 2 needed)

UHD Pump Plate Mounting – PMP-7636UMT

001-4648U Remote Pump Plate Mount (qty 2 needed)

Completed Assembly – PMP-7636P

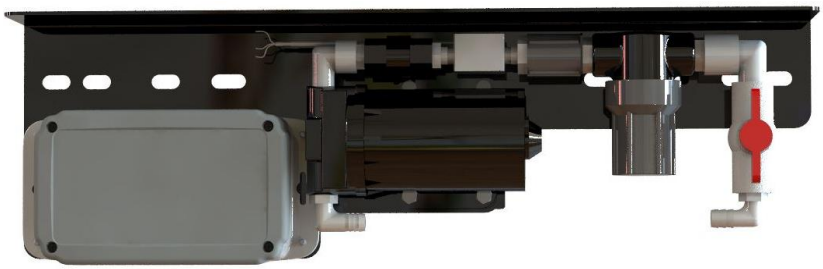

Drain / Fill Line

1. Locate parts bag 1.
2. Thread 3/4” elbow fitting into end of tank.
3. Run hose from the elbow down the frame to the bottom of the baler.
4. Drill 1/4” (7mm) holes to accept the valve holder bracket and use 5/16” x 1” self-tapping screws.
5. Connect valve assembly to other end of hose. Place hose clamps on both ends.
6. Secure hose to frame using cable locks.
7. Install supplied safety decals (DCL-8001 & DCL-8005) next to the ball valve assembly.

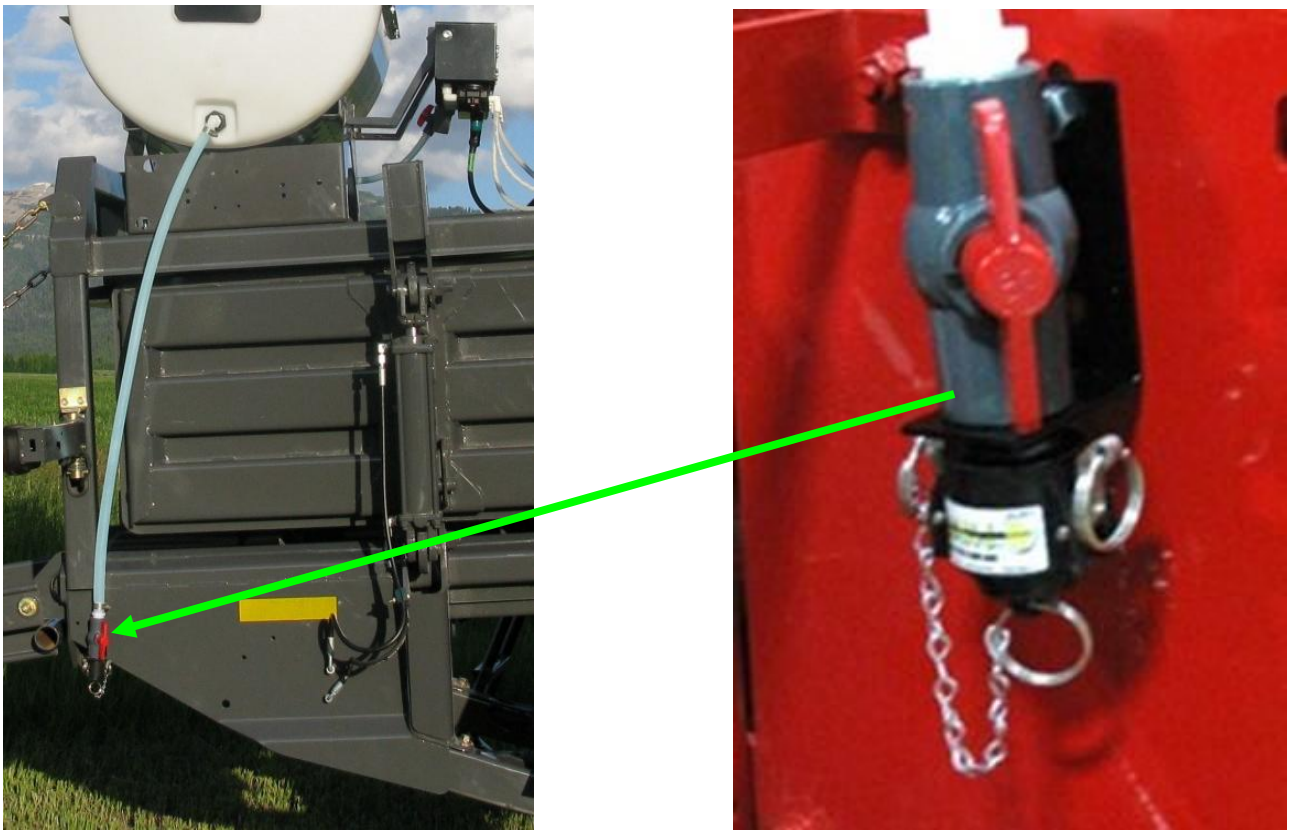

Parts Bags Breakdowns – Drain Fill Kit and Hoses

PBA-1

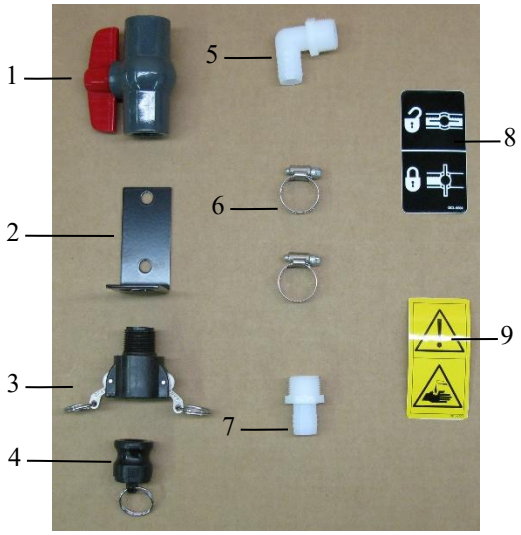

PBP-16

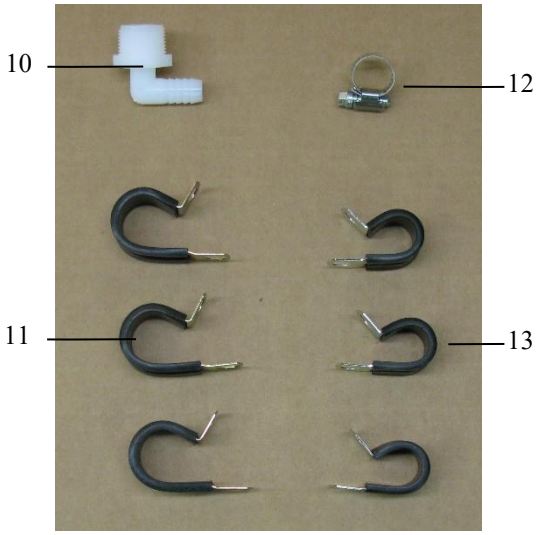

Ref	Description	Part #	Qty
1	3/4" Ball Valve	002-2200	1
2	Valve Holder	001-6702H	1
3	Female Coupler	002-2204A	1
4	Male Shut-Off Plug	002-2205G	1
5	3/4” x 3/4" Elbow	003-EL3434	1
6	#10 Hose Clamp	003-9004	2
7	3/4" x 3/4" Straight Fitting	003-A3434	1

Ref	Description	Part #	Qty
8	Valve Decal	DCL-8004	1
9	Hazard Decal	DCL-8001	1
10	3/4" x 1/2" Elbow	003-EL3412	1
11	3/4" Jiffy Clip	008-9010	3
12	#6 Hose Clamp	003-9003	1
13	Small Jiffy Clip	008-9009	3

Complete Drain Fill Kit 030-0493DFK
(Includes 3/4" tubing below)

Hoses

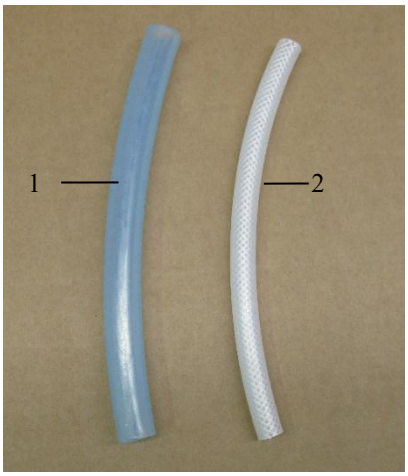

Ref	Description	Part#	Qty
1	1/2” Hose (Tank to Solenoid)	002-9001	30’
2	1/4" Hose (Solenoid to Tips)	002-9016	5’
NP	3/4" Hose (Drain/Fill Line)	002-9002	10’

Spray Shields - The spray shield assembly is designed to spray the hay evenly as the baler picks it up. Sketches of the spray shield nozzle holders are shown below.

Installation of Spray Shield Kit 4518C

Remove the four bolts attached to the wrapper stripper plates as shown above. Replace with the four supplied 3/8” x 1-1/4” carriage bolts, nuts, locks, and flat washers. Mount the spray shield holders (001-4435H) and loosely tighten down hardware. Install spray shield and secure with the two supplied lynch pins. Tighten all hardware. Use the inside slots on 3x3 balers and the outside slots on 3x4 and 4x4 balers.

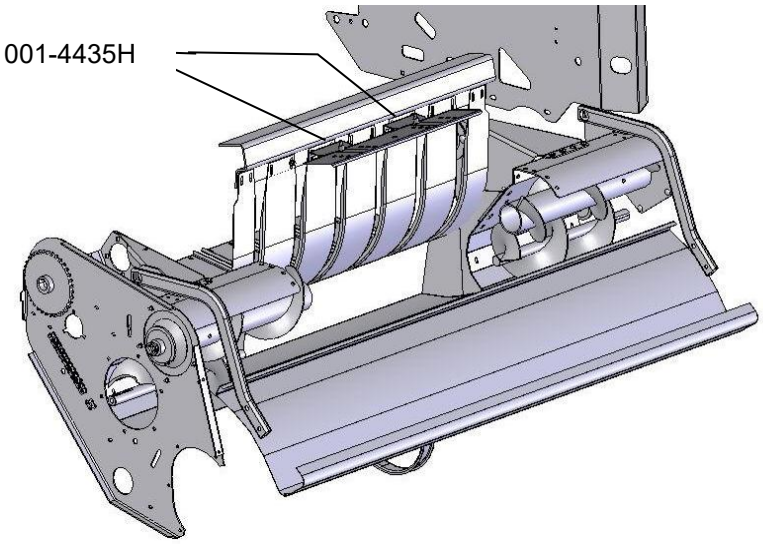

4518C Installation Kit Breakdown

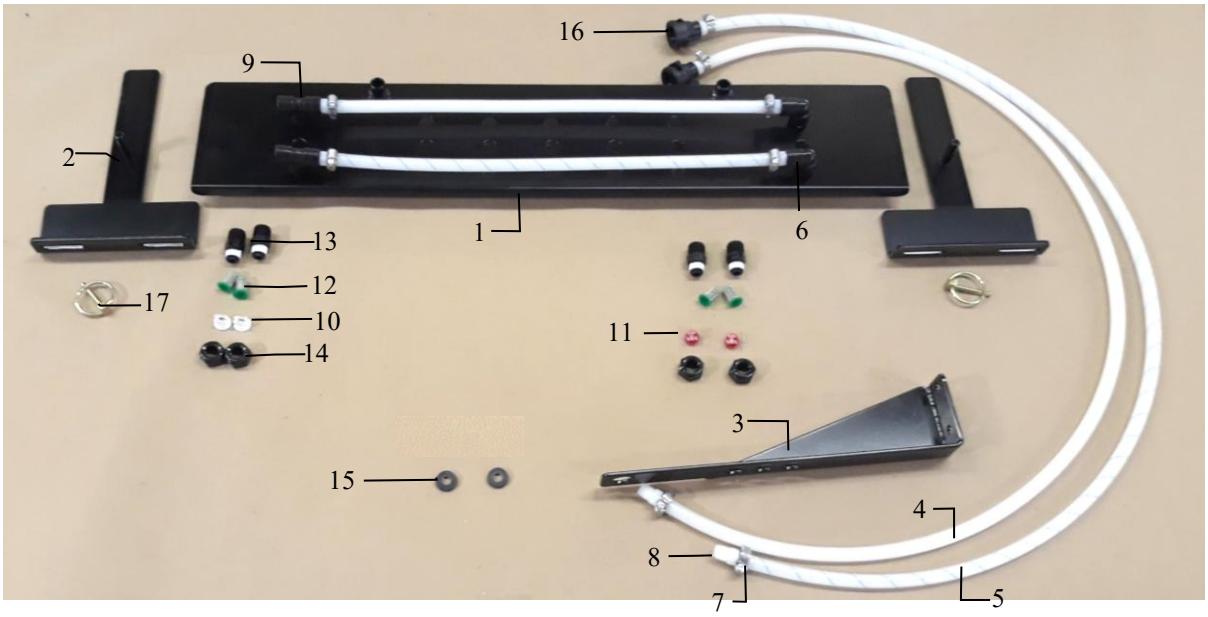

Ref	Description	Part #	Qty	Ref	Description	Part #	Qty
1	Spray Shield	001-4435ES	1	10	1/4” Tip	004-XR11008VK	2
2	Spray Shield Holder	001-4435H	2	11	1/4” Tip	004-XR11004VK	2
3	End of Bale Bracket	001-4648	1	12	Tip Strainer-100 Mesh	004-1203-100	4
4	1/4” Braided Hose	002-9016	5.5	13	Nylon Nozzle Body	004-4722	4
5	1/4” Braided Hose–Blue	002-9016B	5.5	14	Nylon Nozzle Cap	004-4723	4
6	1/4” 90 Deg. Elbow	003-SE14F	2	15	Rubber Washer	004-1207W	2
7	Mini Hose Clamp	003-9002	8	16	Female Quick Connect	004-1207H	2
8	1/4” x 1/4” Straight Fitting	003-A1414	8	17	3/16” Lynch Pin	008-4576	2
9	1/4” Tee Fitting	003-TT14SQ	2				

*Tip color subject to change

Complete Installation Kit **030-4518C**

Installation of Spray Shield Kit 4519C

Locate bottom hole on each side of center insert over top auger and bolt spray shield and mounting bracket into place using the 3/8” x 1-1/4” carriage bolts, nuts, locks, and flat washers. Use the inside slots on 3x3 balers and the outside slots on 3x4 and 4x4 balers.

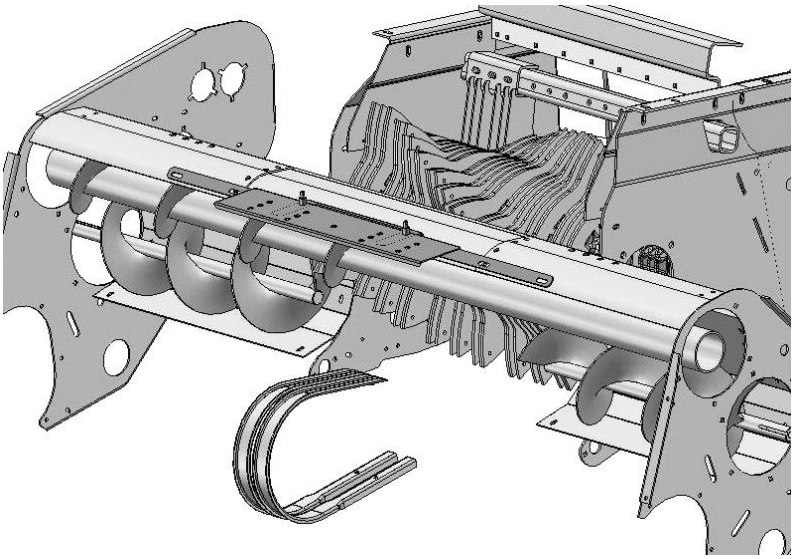

4519C Installation Kit Breakdown

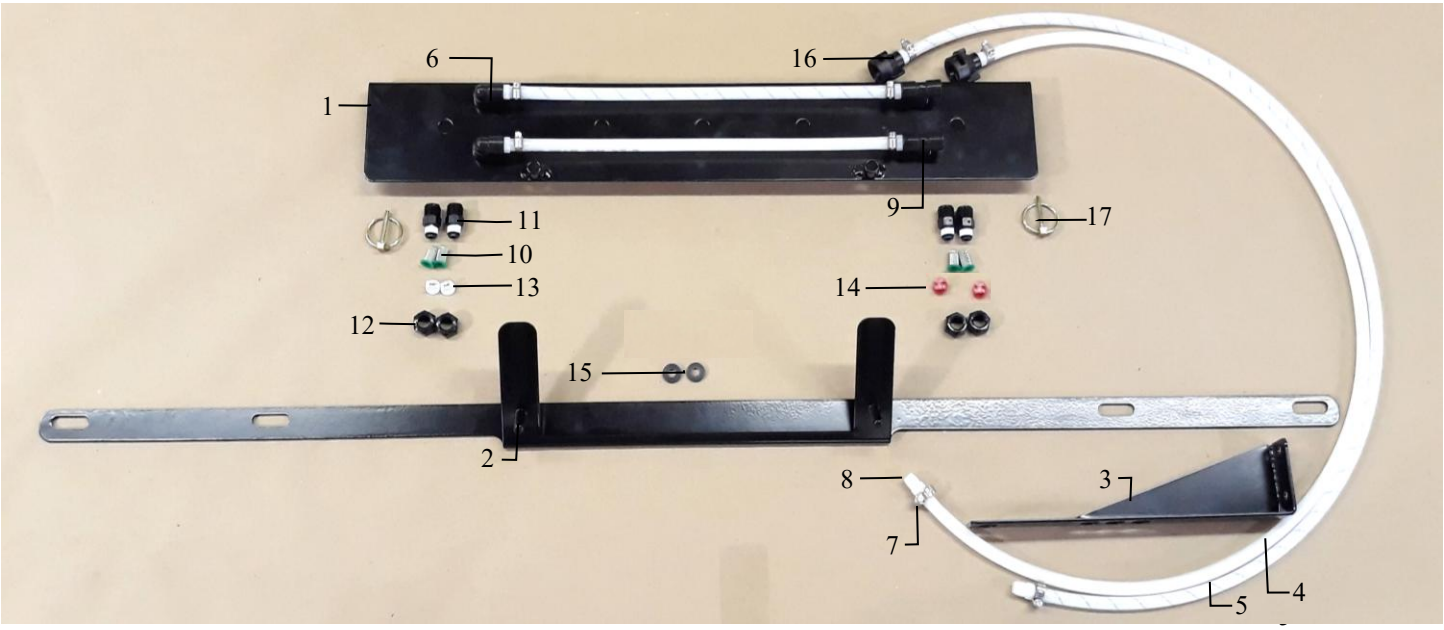

Ref	Description	Part #	Qty	Ref	Description	Part #	Qty
1	Spray Shield	001-4435AS	1	10	Tip Strainer-100 Mesh	004-1203-100	4
2	Spray Shield Holder	001-4435J	1	11	Nylon Nozzle Body	004-4722	4
3	End of Bale Bracket	001-4648	1	12	Nylon Nozzle Cap	004-4723	4
4	1/4” Braided Hose	002-9016	5.5	13	1/4” Tip	004-XR11008VK	2
5	1/4” Braided Hose–Blue	002-9016B	5.5	14	1/4” Tip	004-XR11004VK	2
6	1/4” 90 Deg. Elbow	003-SE14F	2	15	Rubber Washer	004-1207W	2
7	Mini Hose Clamp	003-9002	8	16	Female Quick Connect	004-1207H	2
8	1/4” x 1/4” Straight Fitting	003-A1414	8	17	3/16” Lynch Pin	008-4576	2
9	1/4” Tee Fitting	003-TT14SQ	2				

*Tip color subject to change

Complete Installation Kit **030-4519C**

Installation of Spray Shield Kit 4527C

Mount the two spray shield mounting brackets (001-4435HPC) to the baler as shown above. Attach using four 3/8” x 1-1/4” bolts, flats, locks, and nuts. Mount the spray shield (001-4435ES) on top of the mounting brackets and secure with two lynch pins. Use the inside slots on 3x3 balers and outside slots on 3x4 and 4x4 balers.

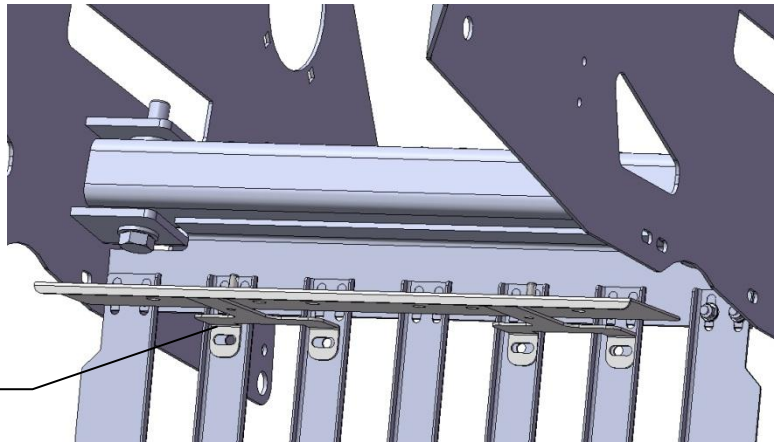

4527C Installation Kit Breakdown

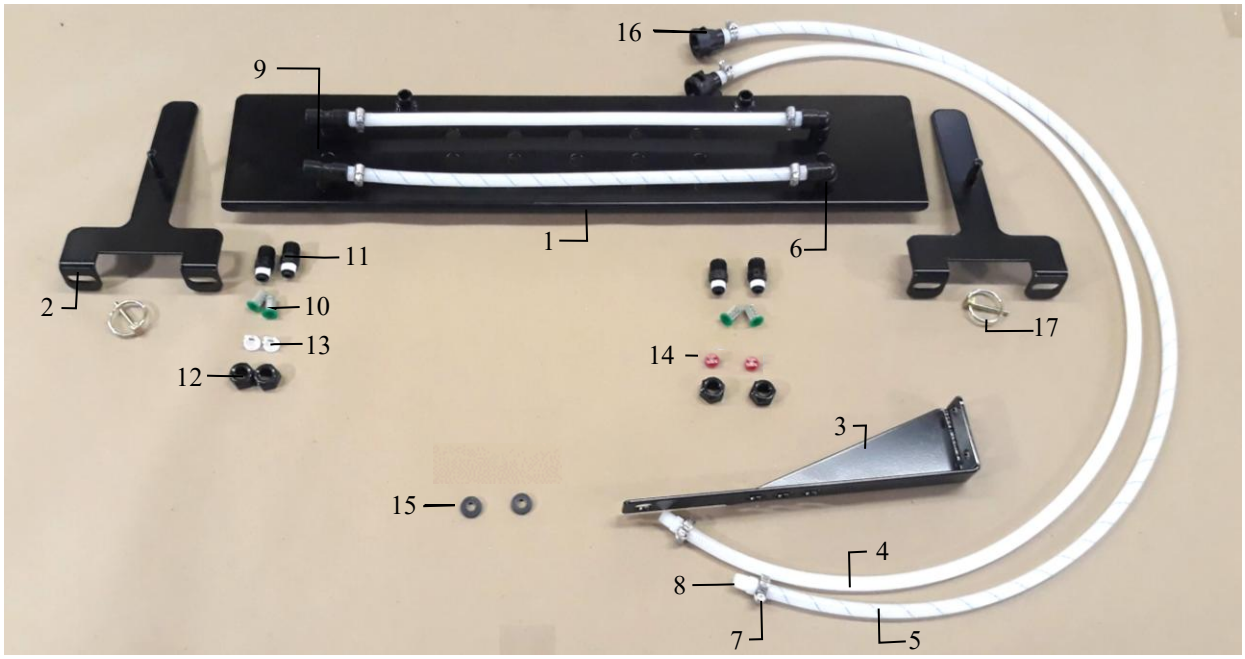

Ref	Description	Part #	Qty	Ref	Description	Part #	Qty
1	Spray Shield	001-4435ES	1	10	Tip Strainer-100 Mesh	004-1203-100	4
2	Spray Shield Holder	001-4435HPC	2	11	Nylon Nozzle Body	004-4722	4
3	End of Bale Sensor Bracket	001-4648	1	12	Nylon Nozzle Cap	004-4723	4
4	1/4” Braided Hose	002-9016	5.5	13	1/4” Tip	004-XR11008VK	2
5	1/4” Braided Hose–Blue	002-9016B	5.5	14	1/4” Tip	004-XR11004VK	2
6	1/4” 90 Deg. Elbow	003-SE14F	2	15	Rubber Washer	004-1207W	2
7	Mini Hose Clamp	003-9002	8	16	Female Quick Connect	004-1207H	2
8	1/4” x 1/4” Straight Fitting	003-A1414	8	17	3/16” Lynch Pin	008-4576	2
9	1/4” Tee Fitting	003-TT14SQ	2				

*Tip color subject to change

Complete Installation Kit **030-4527C**

Installation of Spray Shield Kit 4530C

Locate the two bolts shown in figure A directly below the baler's flywheel. Connect the two mounting brackets (001-4435XB) to figure A using the existing hardware. Connect the mounting brackets to the shield holder (001-4435XA) using four 3/8" x 1" hex bolts, lock washers, and hex nuts. Install the spray shield assembly (001-4435AS) and secure with two supplied lynch pins.

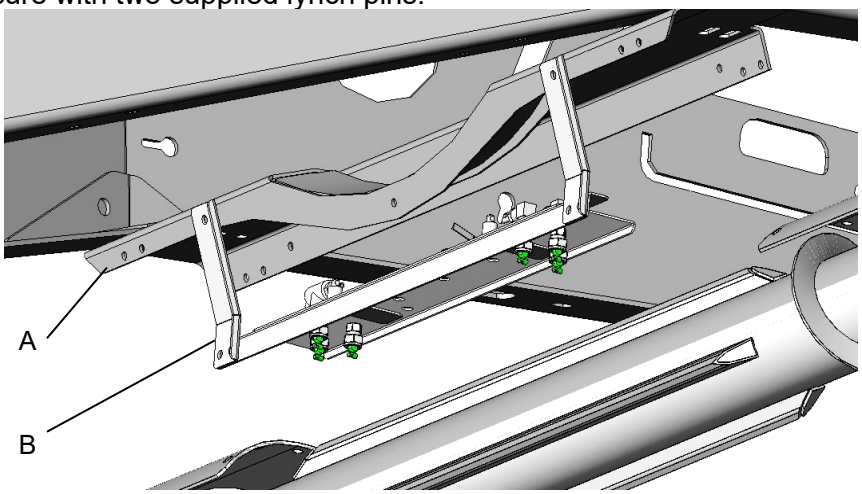

4530C Installation Kit Breakdown

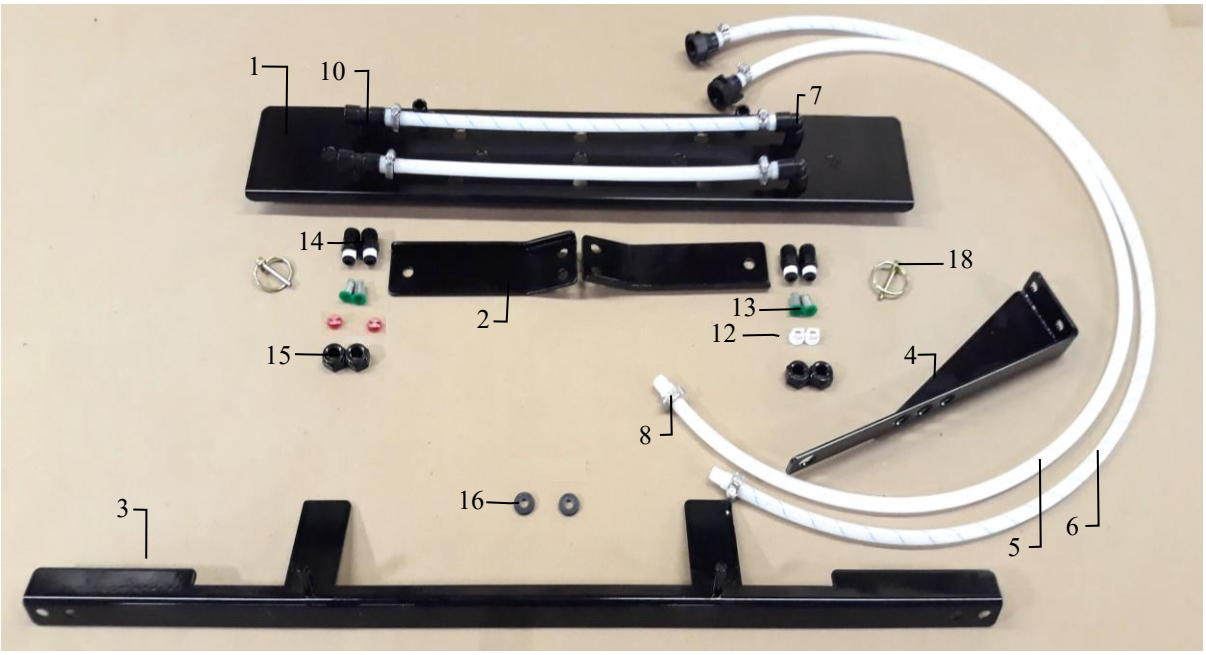

Ref	Description	Part #	Qty	Ref	Description	Part #	Qty
1	Spray Shield	001-4435AS	1	10	1/4" Tee Fitting	003-TT14SQ	2
2	Spray Shield Bracket	001-4435XB	2	11	1/4" Tip	004-XR11008VK	2
3	Spray Shield Holder	001-4435XA	1	12	1/4" Tip	004-XR11004VK	2
4	End of Bale Bracket	001-4648	1	13	Tip Strainer-100 Mesh	004-1203-100	4
5	1/4" Braided Hose	002-9016	5.5	14	Nylon Nozzle Body	004-4722	4
6	1/4" Braided Hose–Blue	002-9016B	5.5	15	Nylon Nozzle Cap	004-4723	4
7	1/4" 90 Deg. Elbow	003-SE14F	2	16	Rubber Washer	004-1207W	2
8	Mini Hose Clamp	003-9002	8	17	Female Quick Connect	004-1207H	2
9	1/4" x 1/4" Straight Fitting	003-A1414	8	18	3/16" Lynch Pin	008-4576	2

*Tip color subject to change

Complete Installation Kit 030-4530C

Installation of Spray Shield Kit 4542C

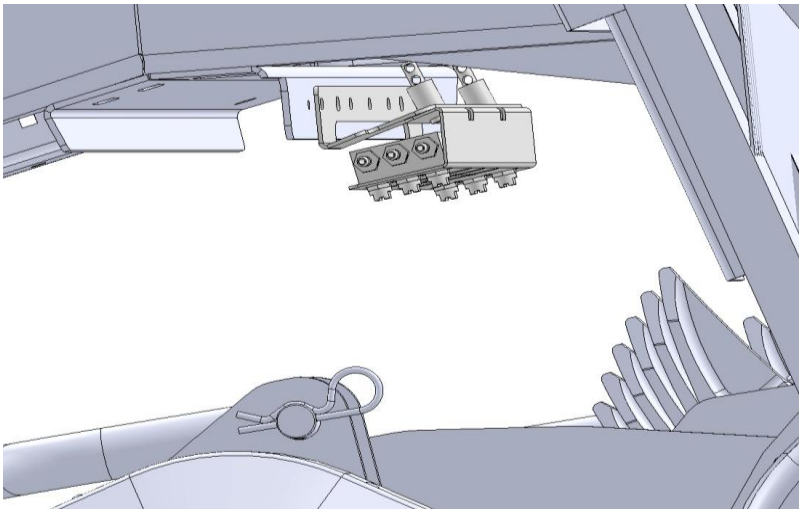

2233 ProCut Balers - Mount spray shield holder (001-4435NAX) to the back side of the bracket on the baler pointing rearward. Utilize small slot #2 & #4 and secure to existing holes with the ¼" hardware. Swap the plug and hose fitting from the spray block so the hoses direct out towards the RH side of the baler.

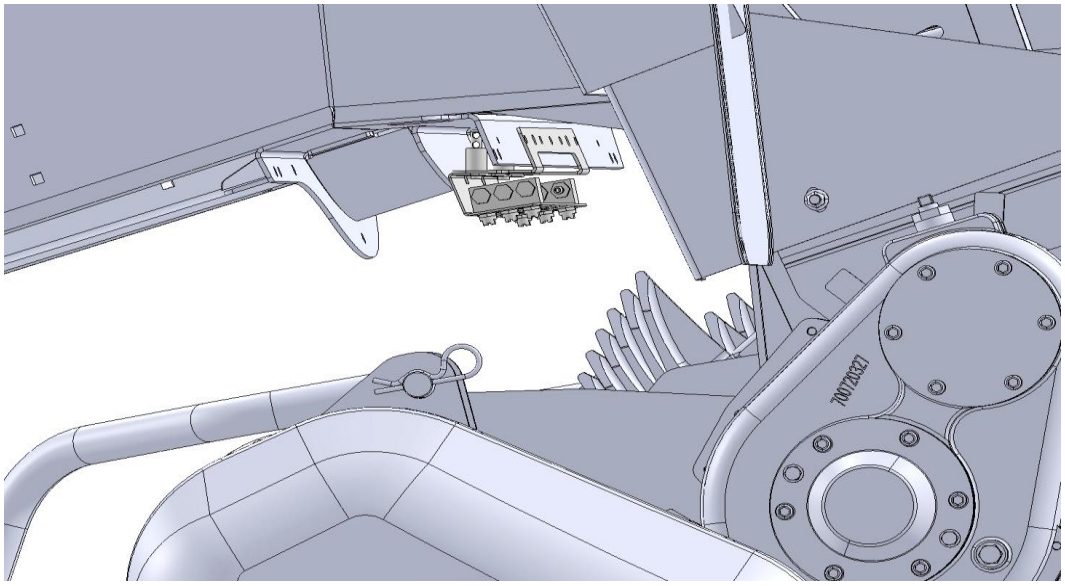

2234 ProCut Balers- Mount spray shield holder (001-4435NAX) to the back side of the bracket on the baler pointing forward. Utilize small slot #1, #3, & #5 and secure to existing holes with the ¼" hardware. Hoses will exit out towards RH side of baler.

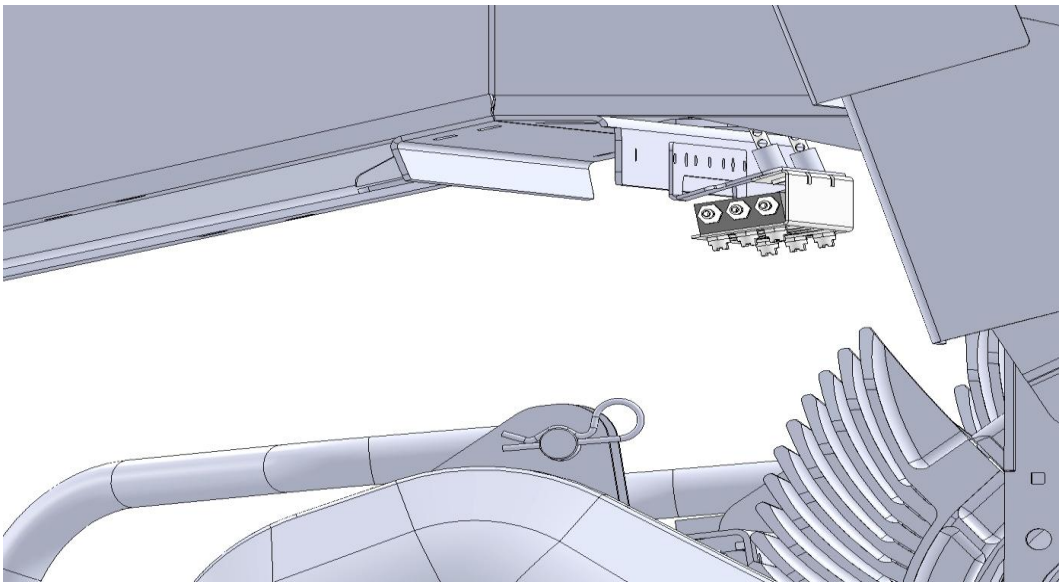

2250 ProCut Balers- Mount spray shield holder (001-4435NAX) to the back side of the bracket on the baler, pointing rearward. Utilize the two large slots and secure to existing holes with the 3/8" hardware. Remove, swap and reinstall the hose fittings and end plugs from the spray block so hoses are directed out toward the RH side of the baler.

Installation of Spray Shield Kit 4542C (Cont.)

2270 ProCut Balers-
Mount spray shield holder (001-4435NAX) to the back side of the bracket on the baler, pointing forward. Utilize large slots to secure to existing holes with the 3/8” hardware. Hoses exit out towards RH side of baler.

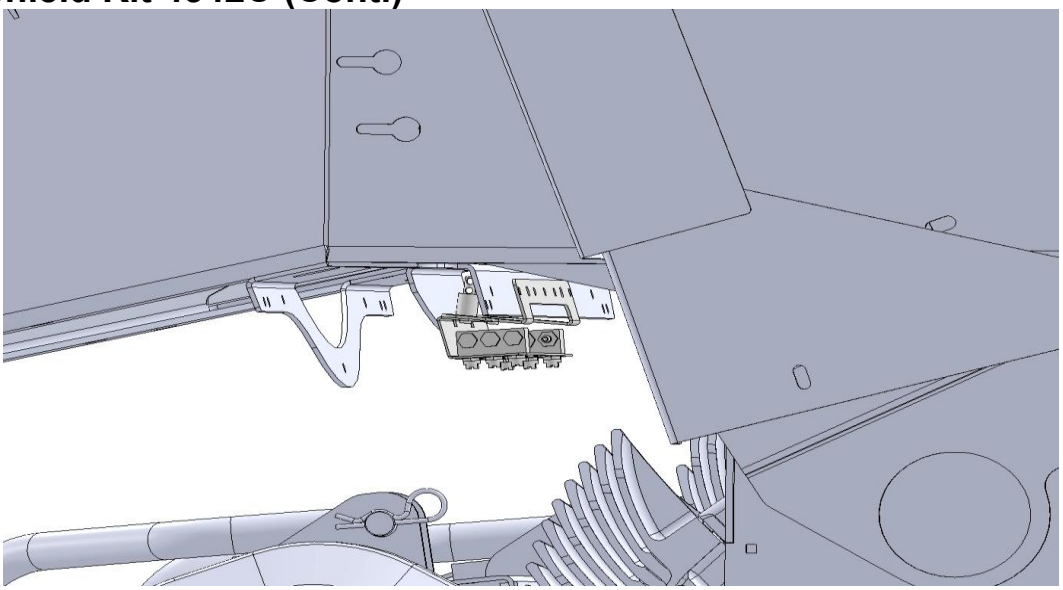

4542C Installation Kit

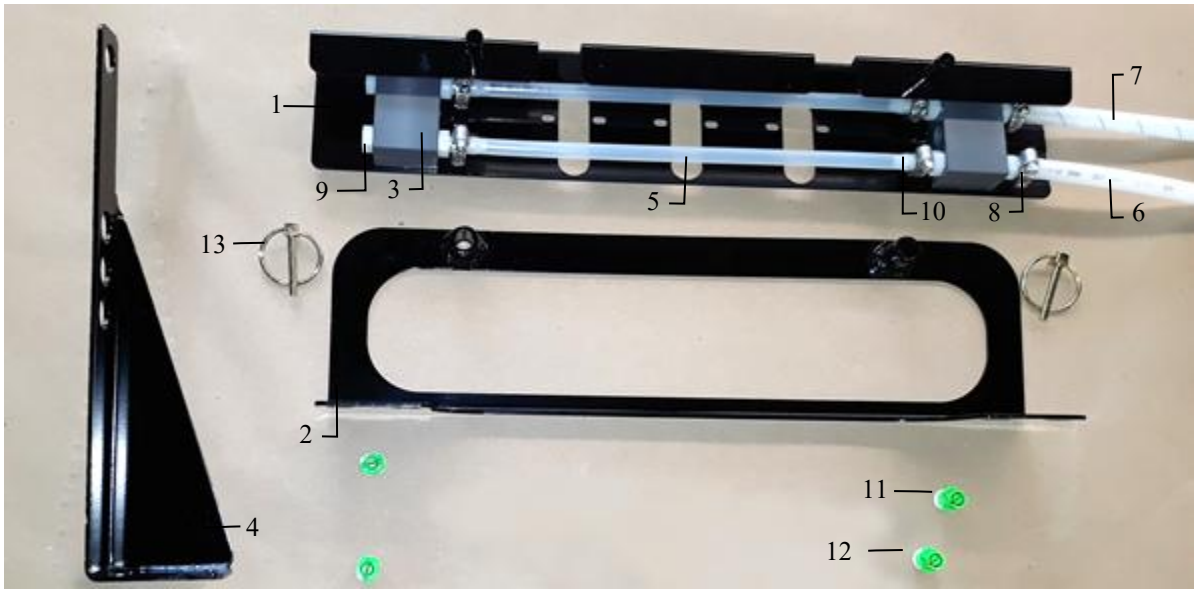

Ref	Description	Part #	Qty	Ref	Description	Part #	Qty
1	Spray Shield	001-4435NSX	1	8	Mini Hose Clamp	003-9002	8
2	Spray Shield Holder	001-4435NAX	1	9	1/4” Hex Plug	003-F14	2
3	Spray Manifold Block	001-4435NSB	2	10	1/4” x 1/4” Straight Fitting	003-A1414	8
4	End of Bale Bracket	001-4648	1	11	1/4” NPT Tip	004-T8008-PT	2
5	1/4” EVA Tubing	002-9006	2	12	1/4” NPT Tip	004-T8004-PT	2
6	1/4” Braided Hose	002-9016	4	13	3/16” Lynch Pin	008-4576	2
7	1/4” Braided Hose–Blue	002-9016B	4	NP	Rubber Washer	004-1207W	2
				NP	Female Quick Connect	004-1207H	2

*Tip color subject to change

Complete Installation Kit **030-4542C**

Installation of Spray Shield Kit 4544C (2370UHD) and 4550C (2233, 2234, 2244)

1. Locate the spray shield holder (001-4435U) and spray shield bracket (001-4435NSX) from the kit.
2. Center the spray shield holder on the front of wrapper extensions, using existing hardware to secure to the baler as shown similar below.
3. Attach the spray shield bracket to the spray shield holder (Item A) and secure with lynch pins.

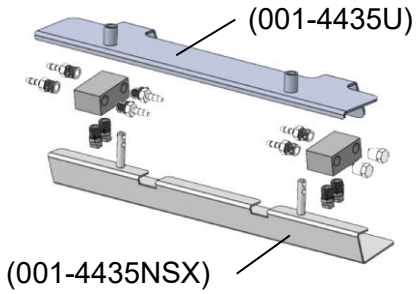

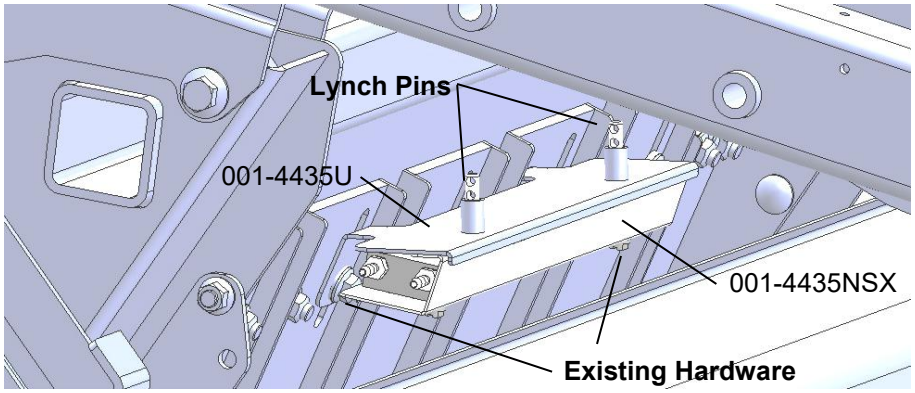

4544C & 4550C Installation Kit Breakdown

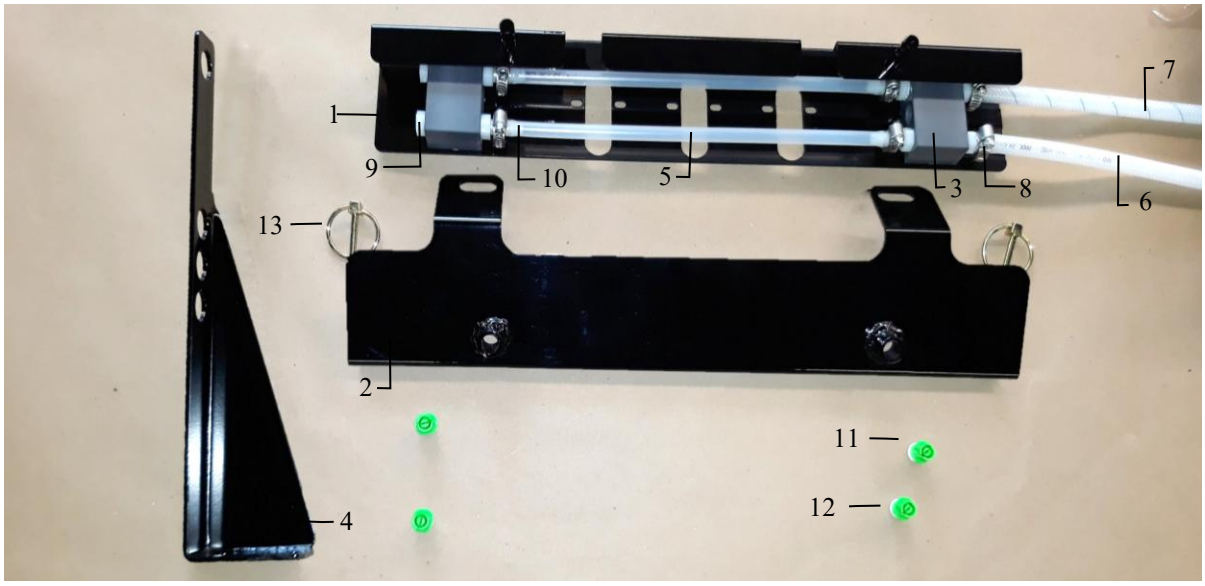

Ref	Description	Part #	Qty	Ref	Description	Part #	Qty
1	Spray Shield	001-4435NSX	1	8	Mini Hose Clamp	003-9002	8
2	Spray Shield Holder	001-4435U	1	9	1/4” Hex Plug	003-F14	2
3	Spray Manifold Block	001-4435NSB	2	10	1/4” x 1/4” Straight Fitting	003-A1414	8
4	End of Bale Bracket	001-4648	1	11	1/4” NPT Tip	004-T8008-PT	2
5	1/4” EVA Tubing	002-9006	2	12	1/4” NPT Tip	004-T8004-PT	2
6	1/4” Braided Hose	002-9016	4	13	3/16” Lynch Pin	008-4576	2
7	1/4” Braided Hose–Blue	002-9016B	4	NP	Female Quick Connect	004-1207H	2
				NP	Rubber Washer	004-1207W	2

*Tip color subject to change

Complete Installation Kit **030-4544C**
(Ref. 1-13) **030-4550C**

<u>Solenoids and Hose Routing</u> (SOL-3SP-LS)

A. Once Spray Shield is mounted, locate the Solenoid Kit SOL-3SP-LS. Pulsing Solenoids 002-2203F comes pre-installed on the Solenoid Mount Plate (001-4648DSH). Mount this assembly in an accessible location as close as possible (max distance 3ft) to the Spray Shield. This will ensure the most precise application of the preservative.

Pulsing Solenoids
002-2203F

Solenoid Harness
006-3650-S1

Solenoid Mount
001-4648DSH

B. Once solenoid bracket mounted, streamline solenoid harness 006-3650-S1 along baler back to connection on main baler harness 006-765B2 once installed. Ensure that the solenoid with <u>white dot</u> attaches to 'SOL 1' and solenoid with <u>blue dot</u> attaches to 'SOL 2' harness connection ports. Ensure wire routing does not interfere with any moving parts or hydraulic lines, securing harness as needed.

C. Route 1/2" hose along the path or similar, inside of the baler from the pump plate to the solenoid plate, as shown in picture above. Keep hoses away from moving parts and hydraulic hoses. When all hose connections are made to the tank, pump, solenoids, and spray shield secure with existing cable clamps or use cable ties.

D. Connect 1/4" reinforced hoses from Spray Shield to Solenoids. Note: Ensure solenoid with white dot connects to white hose/white spray shield dot. Hose with blue stripe connects to solenoid with blue dot.

Tip Connections

Dot Color	Tip	Hose Color	Position on 006-765B2
White Dot	8004 or 11004	White	Sol 1
Blue Dot	8008 or 11008	Blue Stripe	Sol 2

700 Solenoid Package for Large Square Balers

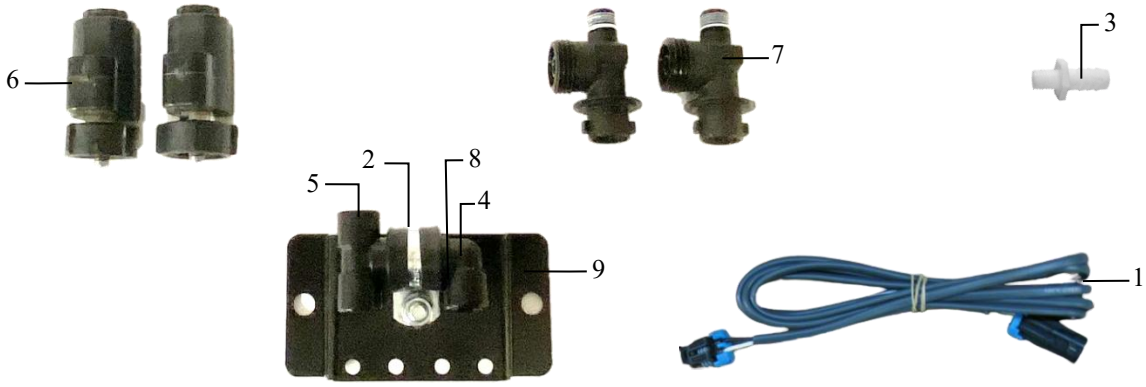

Ref	Description	Part #	Qty	Ref	Description	Part #	Qty
1	Solenoid Harness (5')	006-3650-S1	2	6	Solenoid	002-2203F	2
2	Hose Clamp #6	003-9003	1	7	Solenoid Valve Body	004-1207VF	2
3	1/4" x 1/2" Straight Fitting	003-A1412	1	8	1/4" Nipple	003-M14	1
4	1/4" Elbow	003-SE14F	1	9	Solenoid Holder	001-4648DSH	1
5	1/4" Tee Fitting	003-TT14SQ	1	NP	O-Ring Kit (Replacement)	002-2203FG	2

Complete Assembly **SOL-3SP-LS**

Expanded View of Pulsing Solenoid (002-2203F)

Replacement Pulsing Solenoid O-Ring Kit available (002-2203FG)

(Includes EPDM O-Rings 6, 8, 9 shown below)

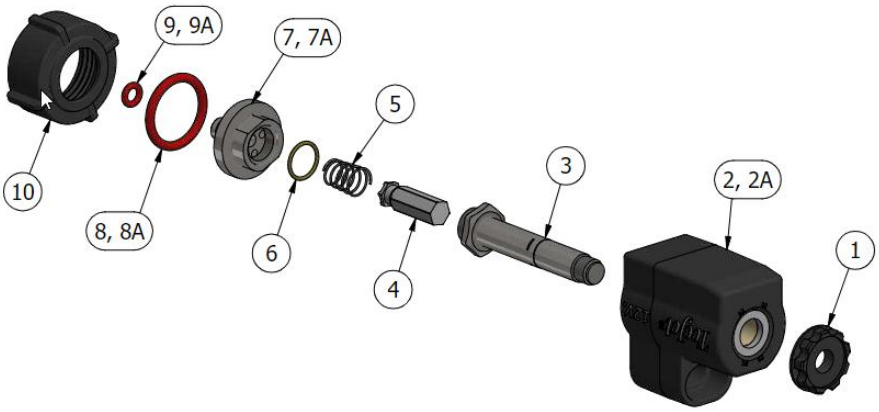

To clean solenoid valves:

The Center Section can be removed from Housing #2 by loosening #1 from #3. Once removed, use wrenches on components #3 and #7 and gently turn to loosen and separate. Soak parts #3-10 in warm soapy water, clean with a soft bristle brush, rinse with clean water to remove buildup before reassembly.

Main Wire Harness Routing and Connections

Route harness 006-765B2 along path shown above (or similar) either on top of or inside of the baler from the pump plate to the hitch of the baler. Note: the end of the harness that has the large plug with sockets and the white heat shrink label, will be at the hitch of the baler. The other end attaches to plug on pump plate. Keep harnesses away from moving parts and hydraulic hoses. Secure harness in suitable locations as needed.

Identification on plugs of Main Baler Harness 006-765B2

Sol 1 and Sol 2 Plugs attach to the solenoids with two 006-3650-S1 harnesses. Sol 1 attaches to the solenoid with a white dot. Sol 2 attaches to the solenoid with a blue dot.

EOR Plug (End of Row) is for the optional Crop Eye Forage Indicator kit. (474C)

CAN/IDM Plugs are for use with optional Moisture Dye Marking kit. (740DM), ISOBUS integration with compatible balers, future expansion, or CAN termination. Only one CAN/IDM port requires a connection for termination. Dye Marker or baler ISO integration harness has a port for terminator connection on them.

EOB Plug is for the (End of Bale) sensor that is attached by the needle arm.

Secure with existing cable clamps or use cable ties when all connections are made.

Main Wire Harness and Baler Interface Harness

Routing and Connections (continued)

AGCO 2200 series (2012 and later models)

A. Route harness 006-765B2 along this path or similar inside of the baler. Keep harnesses away from moving parts and hydraulic hoses. Secure with existing cable clamps or use cable ties. When all connections are made to the IPM on pump plate secure wires as shown above.

B. Under the chamber (back right) locate the Active Terminator from the end of the baler harness (often hidden in the frame). It is located beneath the right rear corner of the baler frame. Attach Baler Interface Harness (006-765VA) to that location. Reconnect Active Terminator to open port of that same harness (006-765VA). If your baler does not have a Terminator at this location, please call Harvest Tec. Route (006-765VA) harness and connect to 006-765B2 plug labeled “CAN/IDM”

Pre 2012

If your baler has the White Terminating Resistor you will need to attach the Pre 2012 AGCO Integration Harness (006-6650VAX) to the end of the Baler Interface harness (006-765VA). Please contact Harvest Tec for this harness. This style terminator may be next to the Baler’s Main Processor.

2370UHD Baler ISOBUS Integration Connection

Beneath the right rear chamber locate the harness labeled (LHR-C72 ISOBUS Term). It is located at the right rear corner of the baler frame. Attach Baler Interface Harness (006-765VA) to that location

Control Modules and Wiring Harnesses

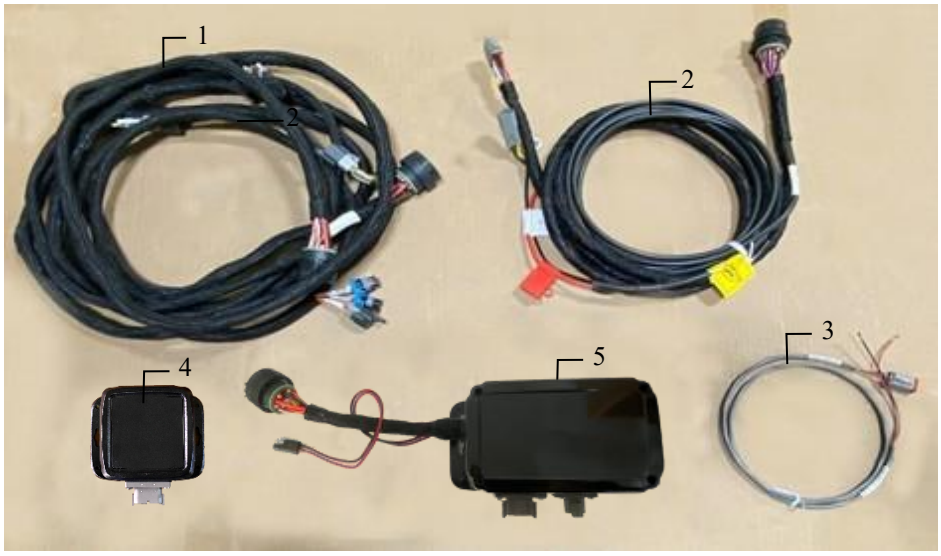

Ref	Description	Part#	Qty
1	Power Lead Baler 35’	006-765B2	1
2	Power Lead Tractor	006-765IC	1
3	Key Switch Wire	006-765CPH	1
4	ISO Pump Module (IPM)	006-7671LS	1
5	ISO Communication Module (ICM)	006-6673	1
NP	Dust Plug Kit	006-765DP	1
NP	120 Ohm Resistor (For use as non-ISO integrated units)	006-700R	

Ref	Description	Part#	Qty
NP	Baler Integration Harness	006-765VA	1
NP	Baler Integration Extension (Required only for pre-2012 Agco Balers)	006-6650VAX	1
NP	Baler Integration Harness (Krone Balers Only)	006-765VAK	1
NP	Baler Integration Harness (Krone Gen. 5 Balers Only)	006-765VAK2	1
NP	USB-C to USB-A Comm.Cable (Optional use for tablet connection)	006-6672USBX	

<u>Star Wheel Moisture Sensors</u> (MSH-LS-STD)
700A and 700UHD

Mounting – Non-UHD Balers

Locate parts bag E and mount star wheels on top of the baler, just behind the knotters and <u>under the walkway</u> on both sides. The notch and holes for the star wheel are precut, secure the star wheels with 5/16” x 3-1/4” BHCS (x2 each side) from the bottom. Blocks are dropped down on the bolts, spacer plate (001-6707ES) used between baler and each star wheel block, then secured in place with the star wheel twine guards (001-4645H, 001-4644H). **Note: Star wheel with six-position plug needs to turn in the same directions as arrow diagram on the back cover. Twine diverter with two extra holes attaches to star wheel with 6 position plug.** Hand tighten with wrench or ratchet- not to exceed 13 ft-lb torque. **<u>DO NOT USE AN IMPACT TO TIGHTEN.</u>** Verify that star wheels align with bale chamber before tightening down all hardware. Connect star wheel harness (006-7307EM2) to the star wheels and route back to pump plate. Attach to square plug on bottom of IPM control module.

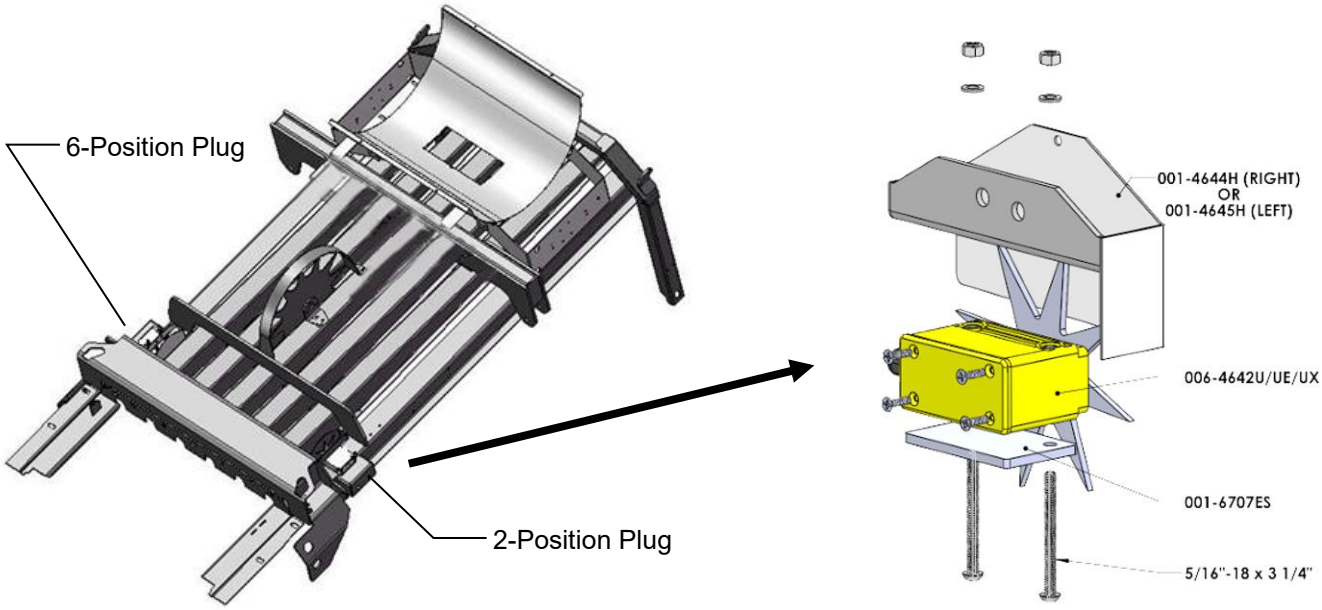

Star Wheel Mounting – UHD Balers

The star wheels are to be mounted on top of the baler, just behind the knotters and under the walkway on both sides. The holes for the star wheel are precut. Remove the plate on top of the catwalk covering the triangle shaped access cutout. Place star wheel over the predrilled holes on both sides of the bale chamber, (shown below). **Note: Star wheel with six-position plug needs to turn in the same directions as arrow diagram on the back. Twine diverter with two extra holes attaches to star wheel with 6 position plug.**

Secure the star wheels with 5/16” x 3-1/4” BHCS (x2 each side) from the bottom side. Blocks are dropped down on the bolts, spacer plate (001-6707ES) used between baler and each star wheel block, then secured in place with the star wheel twine guards (001-4645H, 001-4644H). Hand tighten with wrench or ratchet- not to exceed 13 ft-lb torque. **<u>DO NOT USE AN IMPACT TO TIGHTEN.</u>** Connect star wheel harness (006-7307EM2) to the star wheels and route back to pump plate. Attach to square plug on bottom of IPM control module.

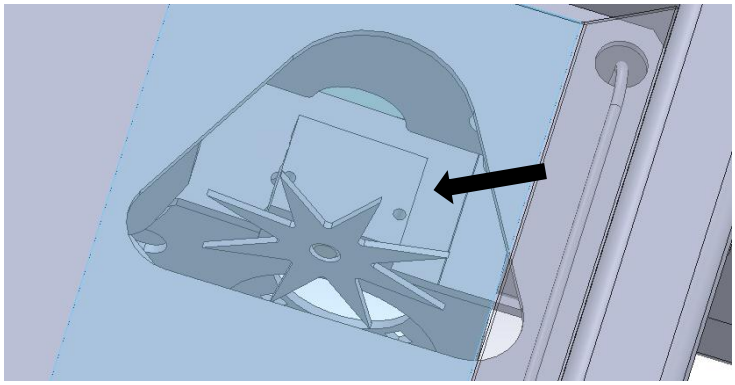

Star Wheel Sensors- 700 Series

For Large Square Balers – Reinforced Yellow Block 2026

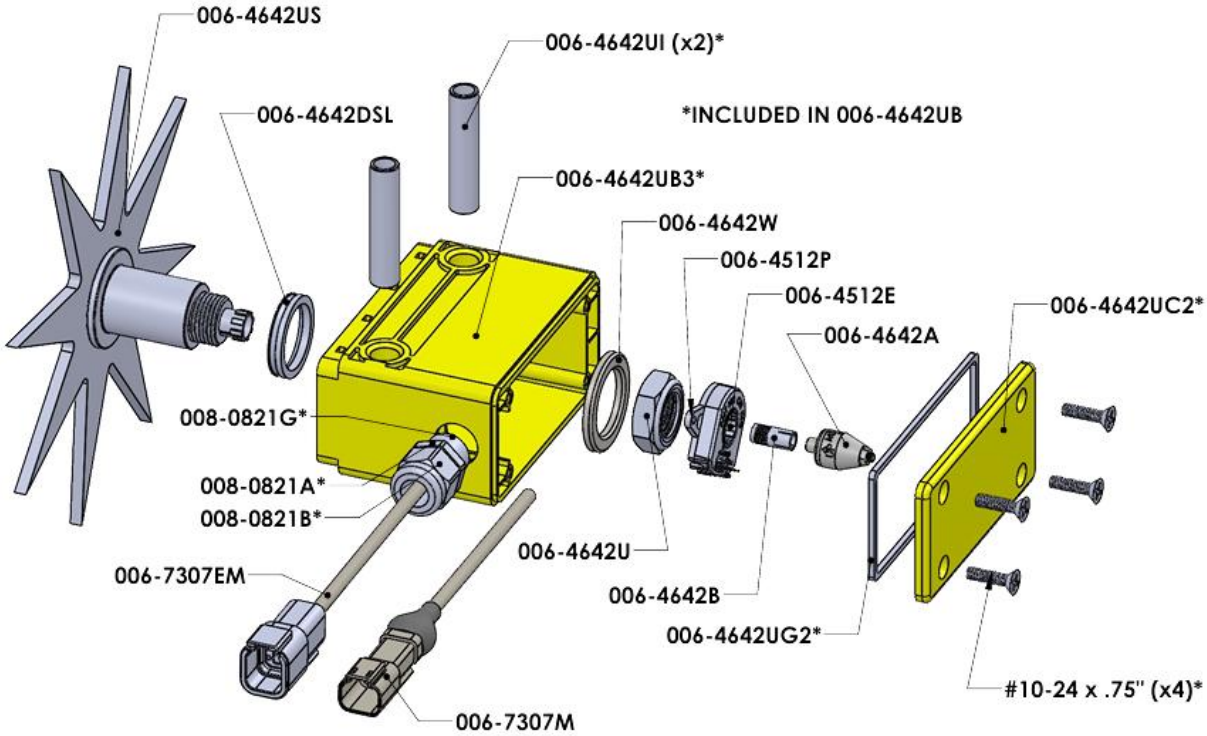

Description	Part#	Qty
Star Wheel (includes swivel insert)	006-4642US	1
Dust Seal Gasket	006-4642UG	1
Star Wheel Block Only	006-4642UB3	1
Star Wheel Block End Cap	006-4642UEC	1
Block Inserts	006-4642UI	2
Wire Compression Grommet	008-0821A	1
Grommet Locking Nut (internal)	008-0821B	1
Washer for Wire Grommet	008-0821G	1
Bearing Washer	006-4642W	1
Star Wheel Nut	006-4642U	1
Encoder Mount (030-4642UE only)	006-4512P	1
Encoder (030-4642UE only)	006-4512E	1
Swivel Insert	006-4642B	1
Swivel Insert	006-4642B	1
Electric Swivel	006-4642A	1
Electric Swivel	006-4642A	1
Star Wheel Block Gasket	006-4642UG2	1
Star Wheel Block Cover	006-4542UC2	1
Encoder Harness Plug (6 Pin) (030-4642UE only)	006-7307EM	1
Moisture Harness Plug (2 Pin) (030-4642U only)	006-7307M	1

Description	Part#	Qty
Star Wheel Spacer Plate (not pictured)	001-6707ES	1
Star Wheel Mounting Hardware (5/16" x 3-1/4" Allen Head Screws, nuts, locks and washers)		2
Twine Guard -Left	001-4645H	
Twine Guard -Right	001-4644H	
Star Wheel Drilling Template (optional)	001-4642T	
Replacement Star Wheel Block*	001-4642UB	
Complete Non-Encoder Star Wheel	**030-4642U**	
Complete Encoder Star Wheel	**030-4642UE**	
Moisture Harness- Standard (12' and 13' Section lengths)	006-7307EM2	
Moisture Harness- Long (16' and 18' section lengths)	006-7307EM3	
Complete Moisture Kit* -Standard	**MSH-LS-STD**	
Complete Moisture Kit*- Long	**MSH-LS-EXT**	

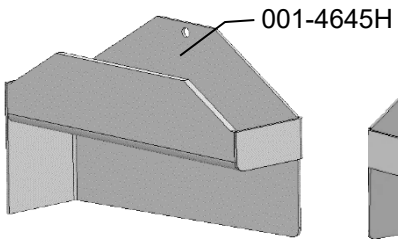

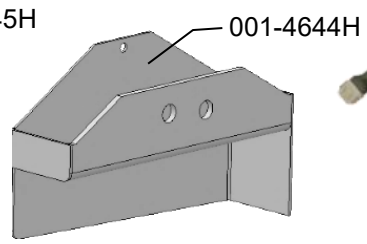

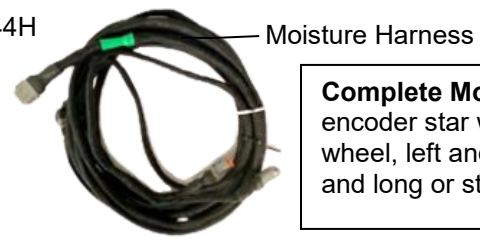

Complete Moisture Kits include encoder star wheel, non-encoder star wheel, left and right twine diverters and long or std. moisture harness.

End of Bale Sensor (EOB)

The End of Bale Sensor determines the position of the needles on the baler. When the needles cycle the sensor communicates this information to the controls. Installation of this sensor is required for use with the Harvest Tec job records. Reference “Sensor Settings” in Operation Manual. Follow the steps below for your baler to mount the sensor.

End of Bale Sensor

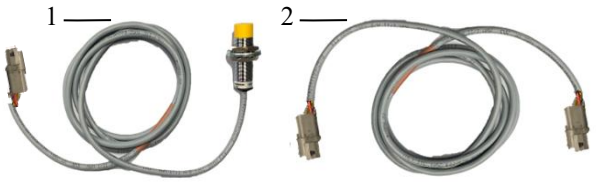

Ref	Description	Part #	Qty
1	End of Bale Sensor	006-7401	1
2	End of Bale Ext.	006-7401EXT	1

Massey ISO Balers – 796M

End of bale sensor bracket (001-4648) will be used. Cutoff excess metal not used during installation.

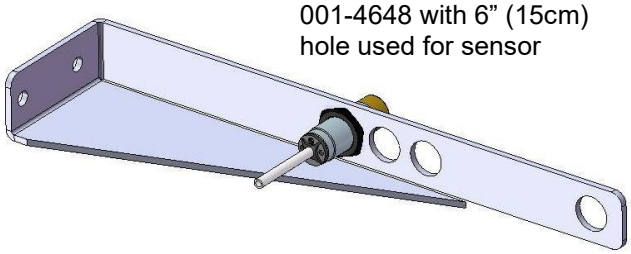

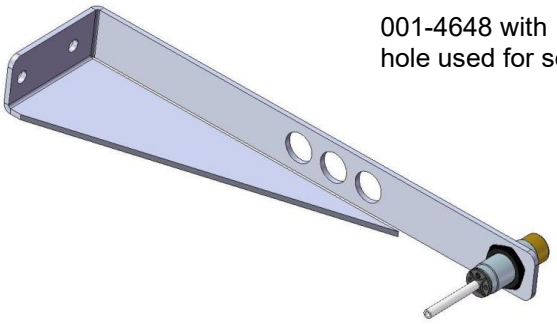

Mount the end of bale sensor bracket (001-4648) as shown in the 8” (20cm) hole position. Mark and drill two 3/8” (10mm) holes and attach the bracket using two 5/16” x 1” self-tapping screws, and 5/16” flange nuts. Mount the sensor in the 8” (20cm) hole location, keep the sensor 1/4" (7mm) from the needle arm and tighten both nuts. Cut off excess metal past the sensor. Run the sensor cable up to the main harness (006-765B2). Attach to the plug labeled EOB.

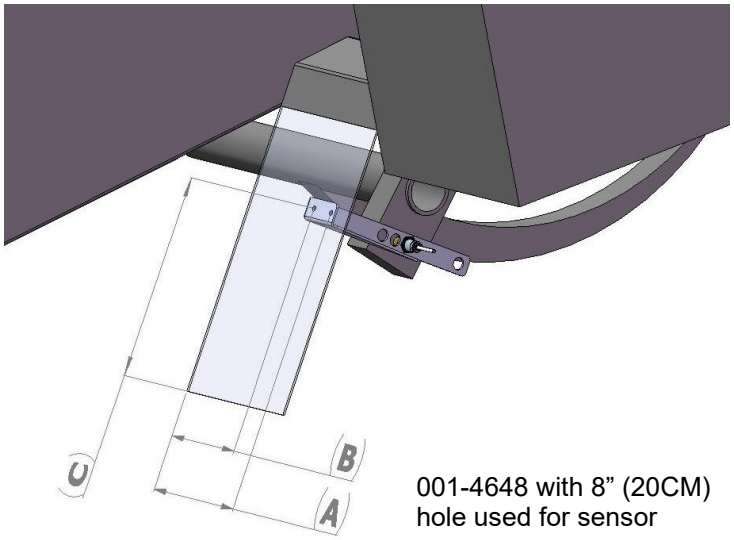

Sensor hole location	A	B	C
8” (20cm)	4-7/8” (12cm)	3-1/8” (8cm)	15” (37cm)

Tractor Setup

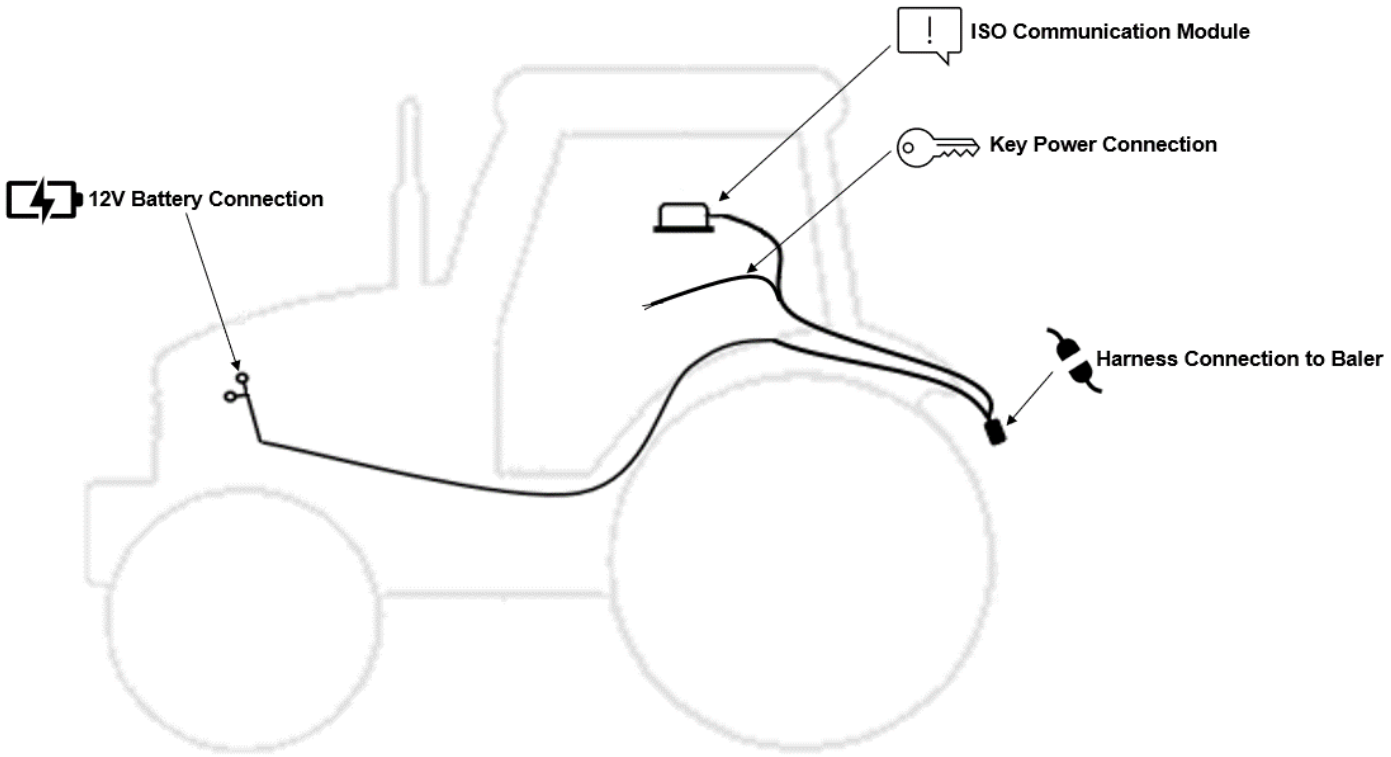

The general tractor setup of the 700 Series applicator can be seen above. The main harness of interest is the tractor power/communication harness (006-765IC). This harness will connect at the tractor battery, to the ISO Communication Module (ICM) mounted in the cab, a keyed power connection point, and connect at the hitch area to the baler power/communication harness (006-765B2). View below to see highlighted installation instruction:

12V Battery Connection

The 12V battery connection must be at the tractor battery. Connection to alternative locations such as an accessory port can cause problems with applicator system.
MUST BE CONNECTED DIRECT TO TRACTOR BATTERY TERMINALS

ISO Communication Module

The ISO communication module is to be mounted inside the cab. Other mounting locations can lead to issues with weathering and operation. Once installed and the system is powered, a green light will turn on the ICM module.

Key Power Connection

Ensure a solid keyed connection is found inside the cab and wired into. Poor keyed power connection can result in applicator system issues.

Harness Connection to Baler

The tractor harness connects at the hitch to baler power/communication harness (006-765B2). This will allow the system components to communicate with one another. Ensure connections are debris and corrosion free.

Display Options

Optional Harvest Tec Display

The 700 series Harvest Tec Display will allow you to set your real time baling parameters to ensure the most precise application to every bale. This is done by utilizing the improved touch technology to select objects, enter data, and swipe through operational screens.

The Harvest Tec Display offers easy integration by connecting to the additional CAN plug on the 006-765IC harness. Once, connected the Harvest Tec display will power up with applicator system.

Note: The Harvest Tec Display must be used as a standalone display, the baler cannot run both integrated and on the Harvest Tec Display. Must be one or the other. Removal of the 006-765VA or 006-765VAU (UHD balers) integration harness is required when equipped.

Optional Tablet Display

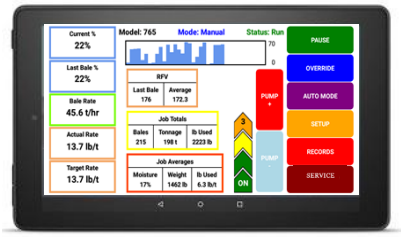

The iOS or Android Tablet displays offer the ability to communicate with the 700 series applicator system via hard-wired connection to the ISO Communication Module (ICM). Through the free Precision Baling App, the operator can set real time baling parameters to ensure the most precise application to every bale. This provides a multi-use option while utilizing the improved app to select objects, enter data, and easily switch through operational screens.

The Tablet Display offers easy integration by connecting a data transfer/charging cable to the USB port on the ICM module (USB port closest to LED light). The Harvest Tec Applicator will display upon opening the app and powering up the applicator system when connected. Tablets can be used in addition to ISO integrated baler VT display.

***Made for iPad® (iOS 15 or higher) or Android Tablet (Does not work with Amazon Fire).**
Required to be running the most current operating system or one version previous.
iPads 10+ years are no longer supported by Apple and are unable to download app.
*iPad is a trademark of Apple Inc., registered in the U.S. and other countries.

Optional Harvest Tec Display Kit (030-7670DK)

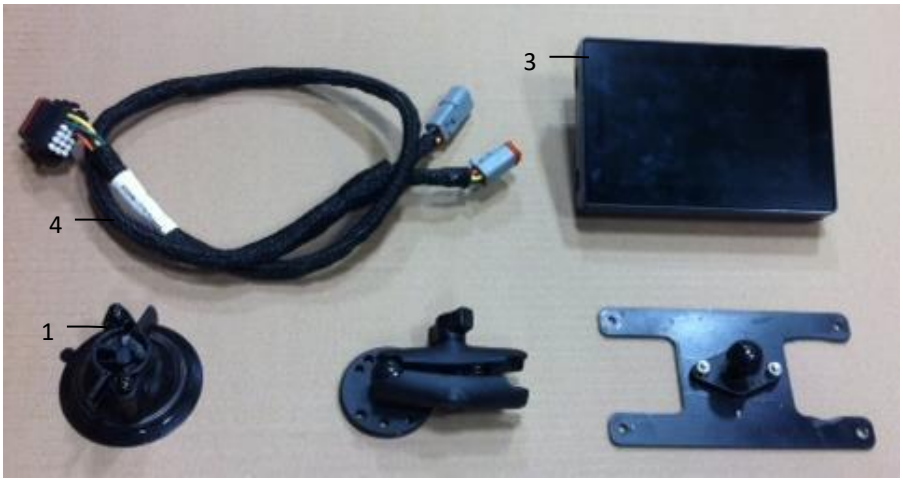

Ref	Description	Part #	Qty
1	Suction Cup Mount	001-2012SCM	1
2	Ram Mount	001-2012H	1
3	Harvest Tec Display	006-765GVT	1
4	Display Harness	006-765GH	1
5	Mounting Plate	001-700GH	1
NP	700 Series Resistor	006-700R	1

Complete HT Display Kit 030-7670DK

Installation Instructions

1. Connect 006-765GH harness connection to 006-765IC tractor harness key power plug.
2. Connect 006-765GH harness to the Harvest Tec VT Display before tightening mount in place.
3. Tighten the mounting and display. Streamline harness as necessary.
4. Once connected, power cycle the system and ensure display is working properly.

NOTE: CANNOT OPERATE APPLICATOR SYSTEM WITH HARVEST TEC DISPLAY AND BALER ISO INTEGRATION or TABLET/ iPad AT THE SAME TIME.

Optional Android Display Kit (030-1670DK)

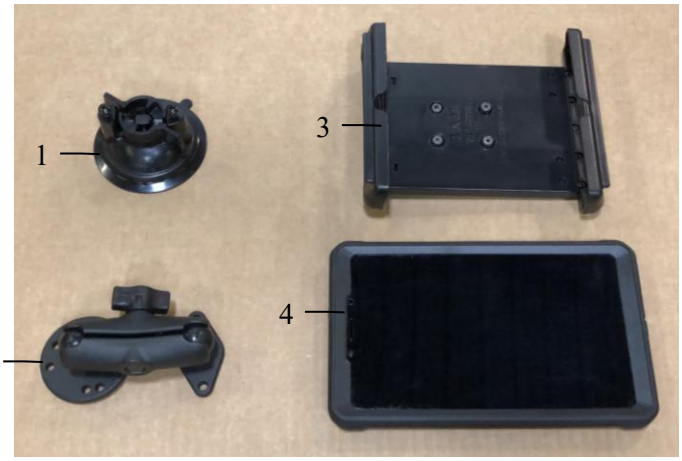

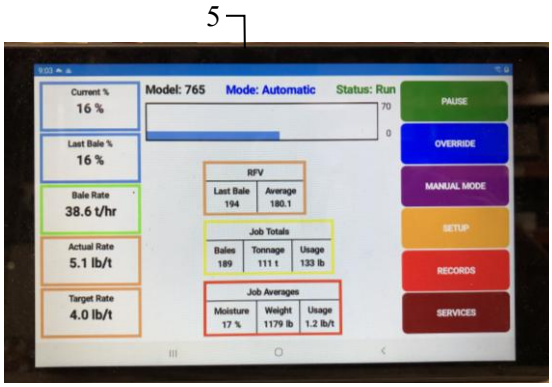

Ref	Description	Part #	Qty
1	Suction Cup Mount	001-2012SCM	1
2	Ram Mount	001-2012H	1
3	Spring Load Cradle	001-2012SLC	1
4	Android Case	001-2012A1	1
5	Android Tablet	006-1670AT	1
NP	USB-C to USB-A Cable	006-6672USBX	1

Complete Android Tablet Display Kit **030-1670DK**

Note: Use a quality communication cable ending with a USB-A connection to connect tablet to (006-765ICM) control module - plug into the USB port showing a tablet.

Optional iPad Display Kit (030-6670DK)

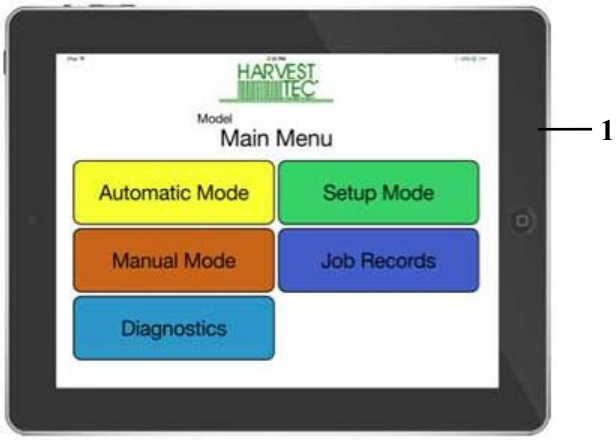

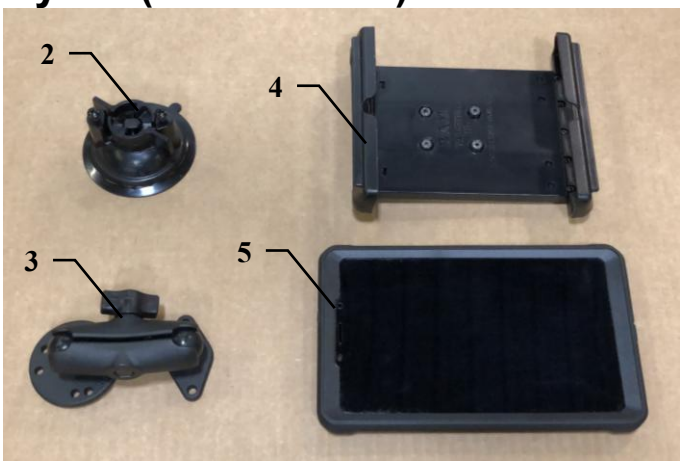

Ref	Description	Part #	Qty
1	iPad Mini 6	006-6670IP	1
2	Suction Cup Mount	001-2012SCM	1
3	Ram Mount	001-2012H	1
4	Spring Load Cradle	001-2012SLC	1
5	iPad Mini 6 Case	001-2012C6	1
NP	Power/Comm. Cable	006-6672USBX	1

Complete iPad Mini Display Kit **030-6670DK**

iPad mini is a trademark of Apple Inc., registered in the U.S. and other countries

Optional ISO Display Adapter Harness (006-7670A or 006-7670F)

For use with a dedicated ISO display

The 700 Series Applicator has the option to tie into compatible dedicated ISO monitors by utilizing the diagnostic port. When connected, the Harvest Tec System will populate as its own object pool within the ISO display. When this object pool is selected, the ISO monitor will then function as a dedicated monitor for the Harvest Tec System.

The Harvest Tec System will function as a stand-alone system when using this adapter.
System will not integrate with the baler ISO system software when using this adapter.

Any tablet connected to the ICM module must be disconnected from the ICM before the Harvest Tec Object Pool screen will activate within the ISO display.
To connect Adapter Harness (006-7670A or 006-7670F), unplug the 4-pin Key Power Plug (006-765CPH) connection from the Tractor Harness (006-765IC) and replace with the plug from the Adapter Harness. Connect the round plug end of the Adapter Harness to the Tractor ISO Display Diagnostic port.

Scan the QR code to view a short video of the
Adapter Harness for ISO Display:

For additional product and service information:
See our YouTube Channel https://www.youtube.com/@harvesttec

ISO Diagnostic Port Adapter (006-7670A)

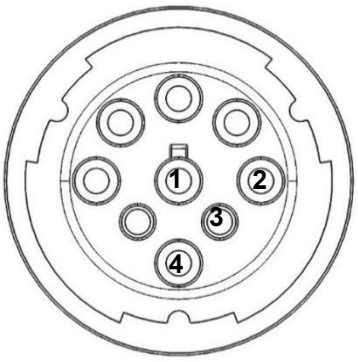

006-7670A connecting plug and pin out

Pin 1	Black	Ground
Pin 2	Yellow	CAN High
Pin 3	Green	CAN Low
Pin 4	Red	12V+ Key Power

ISO Diagnostic Port Adapter (006-7670F)

For Newer Fendt and MF Tractors with plug location in the cab ceiling

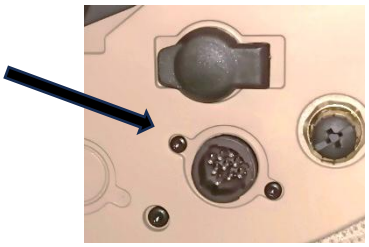

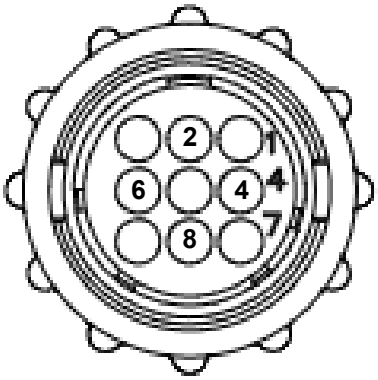

006-7670F connecting plug and pin out

Pin 8	Black	Ground
Pin 4	Yellow	CAN High
Pin 2	Green	CAN Low
Pin 6	Red	12V+ Key Power

Baler VT Integration Option
(for compatible ISO balers)

The 700 series integration to the Baler VT allows for the ability to set your real time baling though the baler VT and monitor both baler settings and Harvest Tec system parameters on one screen to ensure the most precise application to every bale.
The 700 series offers easy integration by connecting to the additional CAN plug on the 006-765B2 harness. Once connected the Harvest Tec system will display with power up of the baler and applicator system.

Baler Display Integration

The ISOBUS Monitor utilizes a combination of soft keys, number menus, and the scroll wheel on the upper right side of the actual monitor to make selections. Selections are made by scrolling the Thumb Wheel and pressing in once the selection is highlighted. All buttons are labeled and color coded.

Baler Monitor Setup

At any time after the initial Start Up/Power On the green “uploading data status bar (arrow A) may begin to fill. However, due to software version changes a status does not appear on all monitors. To begin setup of the HayBoss Preservative Applicator System select the fourth icon down on the right screen menu-the wrench icon (arrow B).

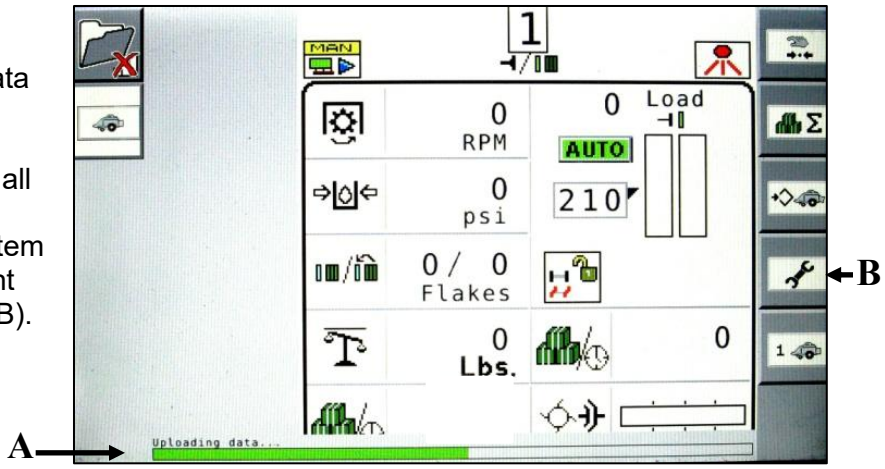

The service screen displayed below will appear. Here you can see the Version of Software for your baler which should be 3.30 or higher to enable working with the Preservative Applicator. Select the icon (arrow C) located at the bottom of the right selection menu to move to the next options menu.

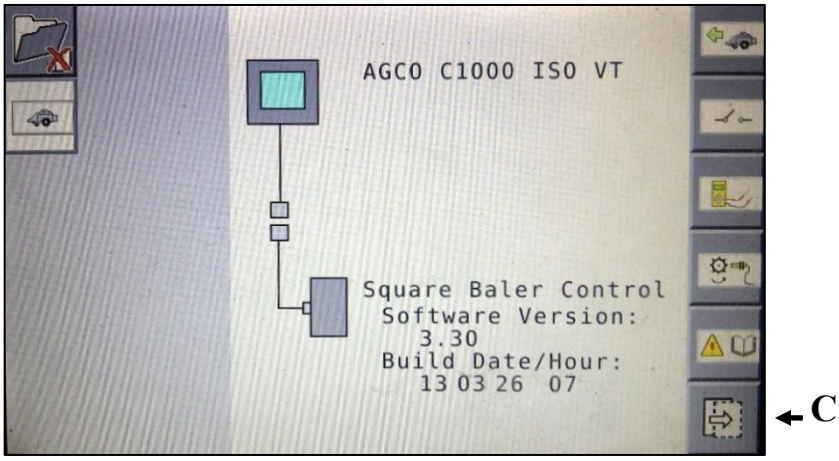

Then select the ‘A B’ icon (arrow D) on the right side, this should be the top button.

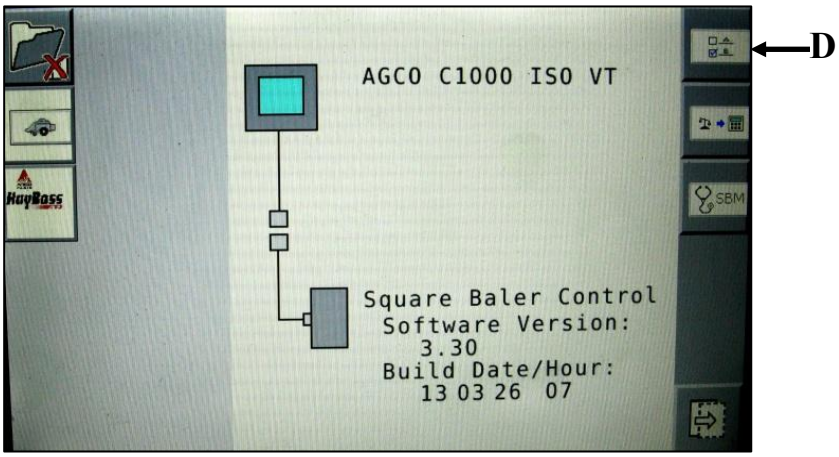

Baler Monitor Setup (continued)

Then select the ‘A B 2’ icon (arrow E) on the right side to enter the next baler options screen.

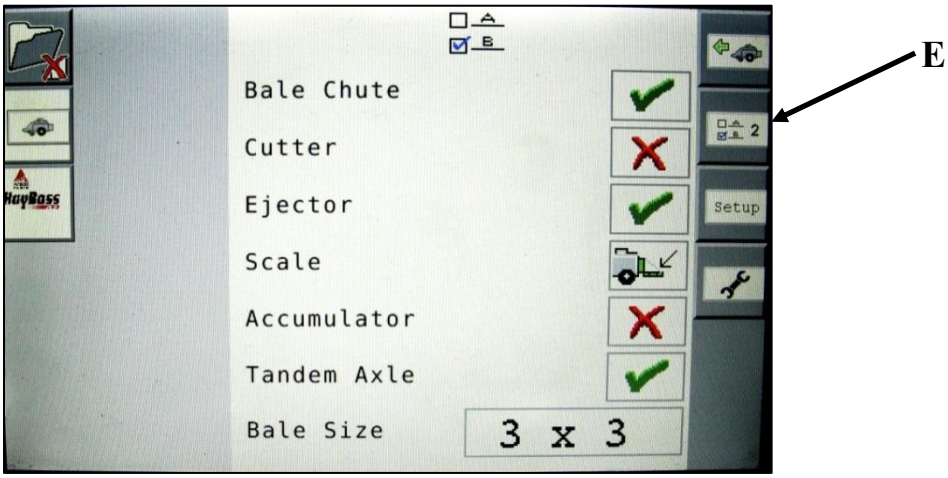

Use the thumb wheel to scroll and select the Harvest Tec Option (arrow F). Press the scroll wheel to open the drop-down menu.

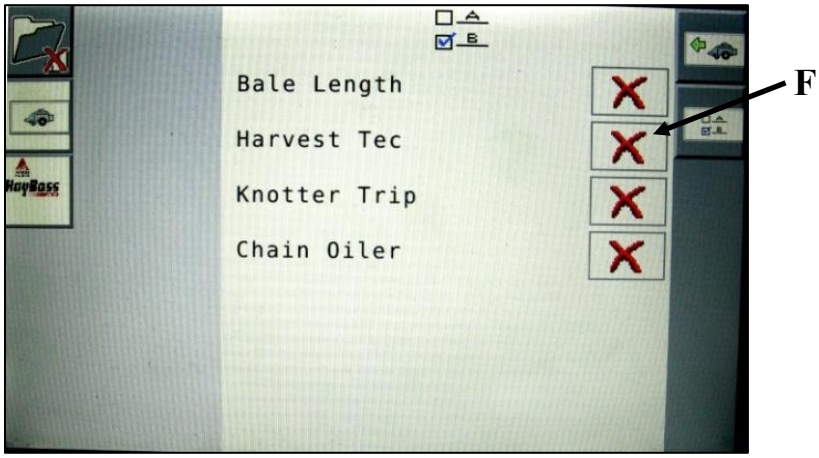

Select the green check mark to turn the Harvest Tec option ON (arrow G). Then select the Baler Run Screen button (arrow H) to save the setting and proceed to the baler run screen.

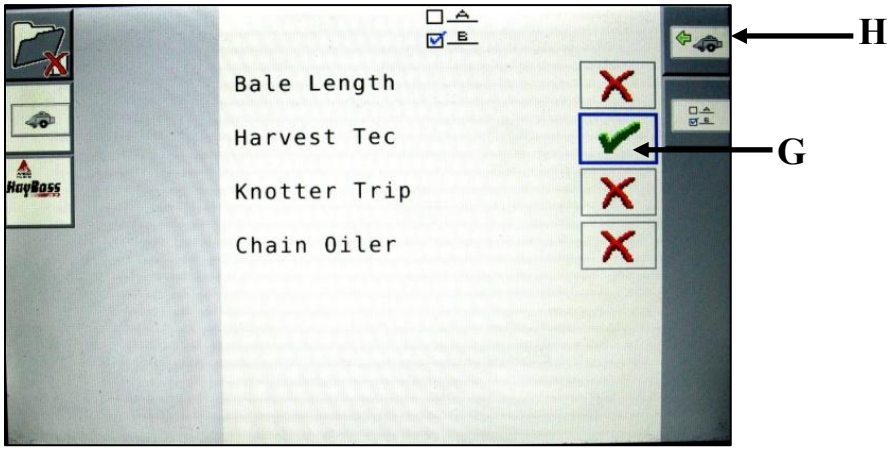

Baler Monitor Setup (continued)

Use the scroll wheel to select a container option on the baler run screen. Harvest Tec information can be displayed in any container on the baler run screen. Press the scroll wheel to open the drop-down menu and scroll to select the “HT Preservative” (arrow I) option and press the scroll wheel to select it. This will place the preservative information, “Actual” and “Target” values, in that position on the screen.

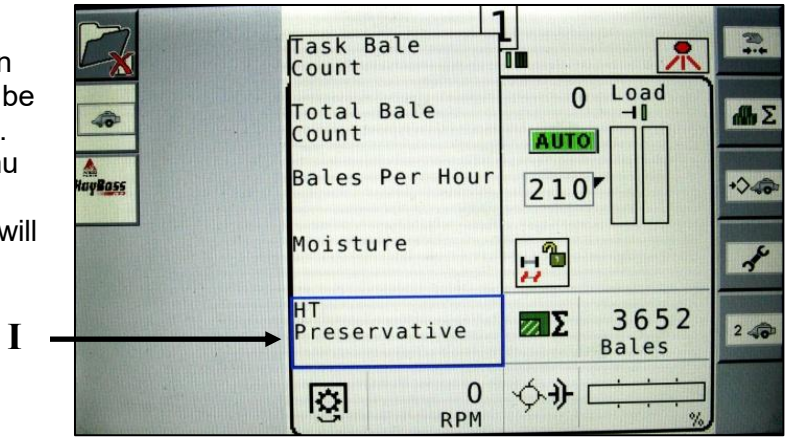

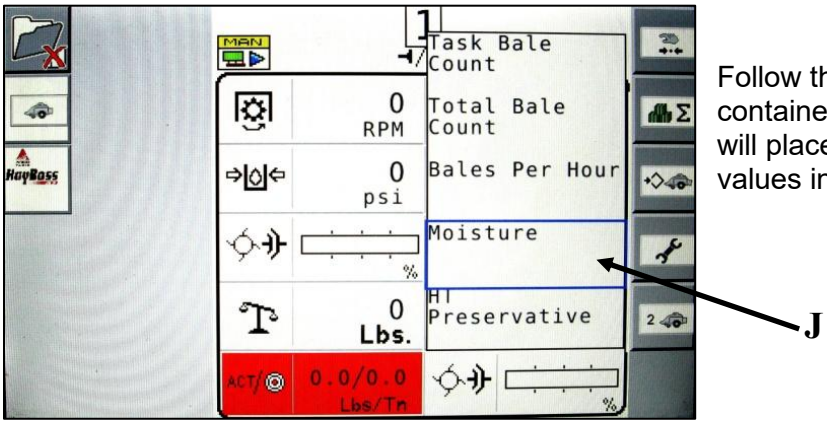

Follow the same steps as noted above to select a container for the moisture information (arrow J). This will place the “Instantaneous” and “Last Bale” moisture values in this position on the screen.

Once the HT Preservative and Moisture options are selected, the containers and spray icon should flash when the system is in a PAUSED state, indicating that the system is not in RUN mode or that the system is paused by the End-of Row sensors. When the icons are solid, it indicates that the system is in RUN mode and not paused by the End-of-Row sensors.

The preservative information is denoted by “ACT” for actual application and a target icon for the target value. These values are separated by a slash.

The moisture information is denoted by a moisture droplet for instantaneous and a moisture droplet with a back arrow above for the last bale average moisture. These values are separated by a slash. And a preservative nozzle icon will show in the top right corner of the screen (arrow K).

****NOTE:** When the preservative sprayer icon is flashing, the preservative system is not in either run mode (Auto or Manual), or the system is paused by the End-of-Row sensors. When the system is in a run mode, the icon will be solid GREEN. The HT Preservative and Moisture containers will flash when the system in not in a run mode or paused by the End-of-Row sensors.

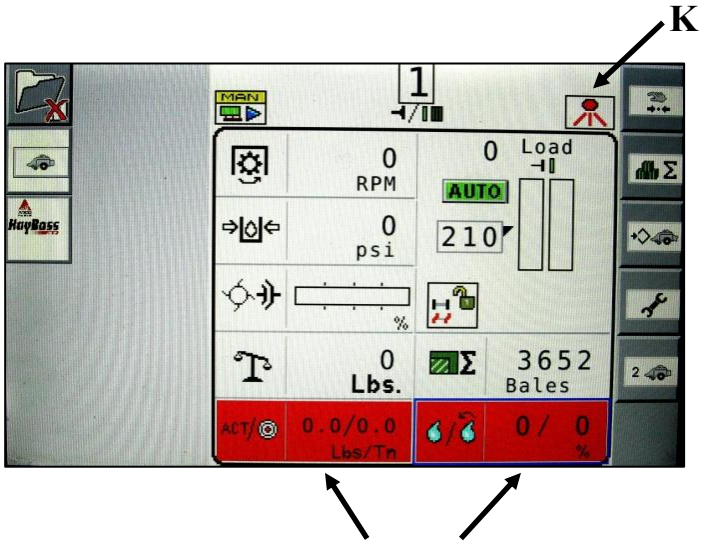

HT Preservative and Moisture Containers

Baler Monitor Setup / View – UHD Baler Only

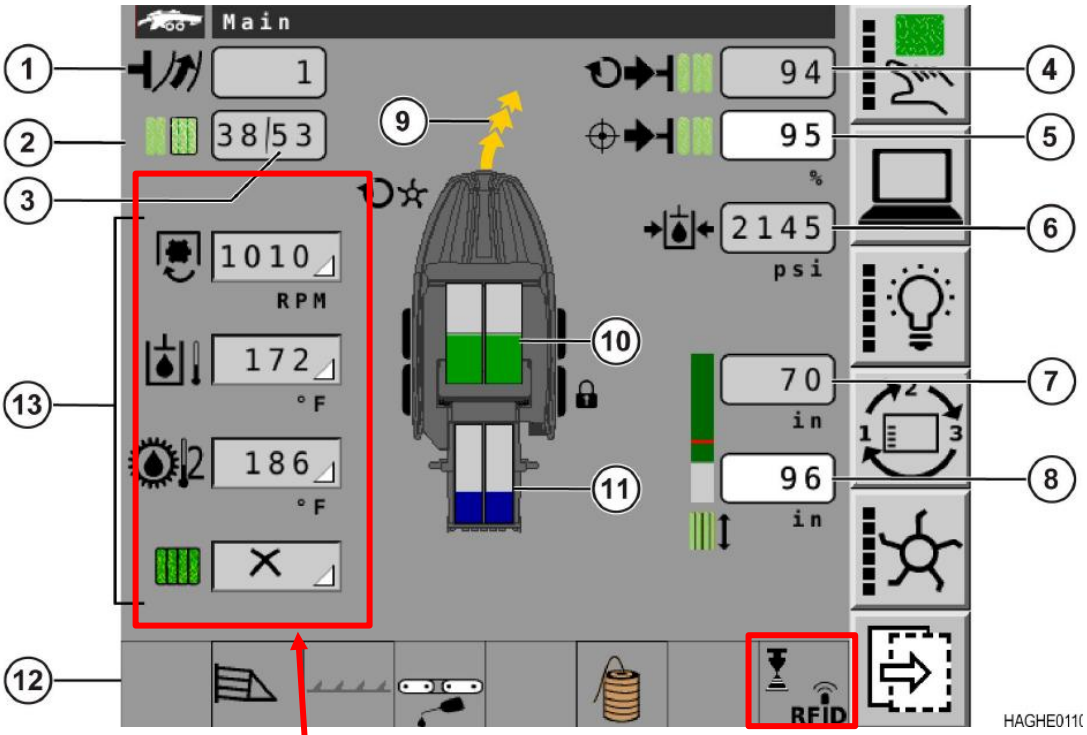

These four containers can be configured by the operator. In the selectable list are the items for your system. They are Current moisture, average moisture, applicator target rate, and applicator actual rate. When moisture is above your alarm setpoint it will show the moisture value with a red background.

This container is reserved for the moisture system. It shows the tagger status and applicator status. When moisture is above the set point, it will turn the background red and show the percent moisture icon in the upper right corner.

Background turns red when system is on main work screen. The icon will blink when the system is paused.

Current Moisture

Preservative Applicator Target Rate

Average Moisture

Preservative Applicator Actual Rate

Moisture System On. The icon will flash when the system is paused

Moisture System Off

Tagger Installed and On. This icon will flash when a tag is applied. A percent (%) symbol will display if a bale moisture goes over the set limit.

Selecting the 700 Series Preservative Applicator

The soft keys down the left side of the monitor correlate with choosing connected implements or files. Depending on your specific situation this could show your tractor, camera, baler, or the HayBoss Preservative Applicator System, among others. To enter the HayBoss menu screens, select the soft key next to the HayBoss icon (Arrow L). Once the HayBoss option has been selected, the Main Menu screen will show as seen below.

The numbered and colored soft keys on the right side (1-6) correlate to the selection options on the screen. For example, Manual Mode is PURPLE, this correlates to the PURPLE number “3” soft key option on the right side (Arrow M). So, to enter Manual Mode, the scroll wheel can be used to select the button or the soft key next to the PURPLE number “3” option can be pressed. To return to the baler work screen select the baler icon (arrow O).

The cycle button (Arrow P) can be used to toggle between connected implements. This is located at the bottom of the monitor next to the Home and Esc buttons.

Wiring Diagram – 700 Series

1. Connect the power harness (006-765IC) to the tractor battery (12 volt) using the red wire with fuse to the positive side and the black wire to the negative.
   A. **The power harness must be connected to the battery!**
      CONTACT HARVEST TEC BEFORE MODIFICATIONS.
      The unit will draw more amps than convenience outlets can handle. Any modifications of the power harness will void systems warranty
   B. **This unit will not function on positive ground tractors.**
   C. **If the unit loses power while operating it will not keep track of accumulated pounds of product used.**
2. The power harness on the tractor (006-765IC) will run from the tractor battery to the hitch. The power harness on the baler (006-765B2) will connect to the tractor power harness (006-765IC) at the hitch.
3. Connect the red keyed power wire (006-765CPH) to a keyed power source on the tractor. Connect the black keyed power wire to ground.
   The keyed power wire must connect to a keyed source or the unit will not power up correctly.
4. Attached the ISO Communication Module (006-6673) to the tractor power harness (006-765IC).
5. Attach the End of Bale (EOB) connection on baler harness (006-765B2) to the EOB Sensor (006-7401).
6. Attach the Solenoids (V1 & V2) connections on baler harness (006-765B2) to the solenoids (002-2203F).
7. Attach the Flowmeter (006-4724A) to ISO Pump Module connection on pump plate assembly.
8. Attach the rubber molded connector on pump plate to the Pump (007-4120DE).
9. Attach star wheel (030-4642 U/UE) connection to ISO Pump Module on pump plate assembly.

System Wiring Diagram

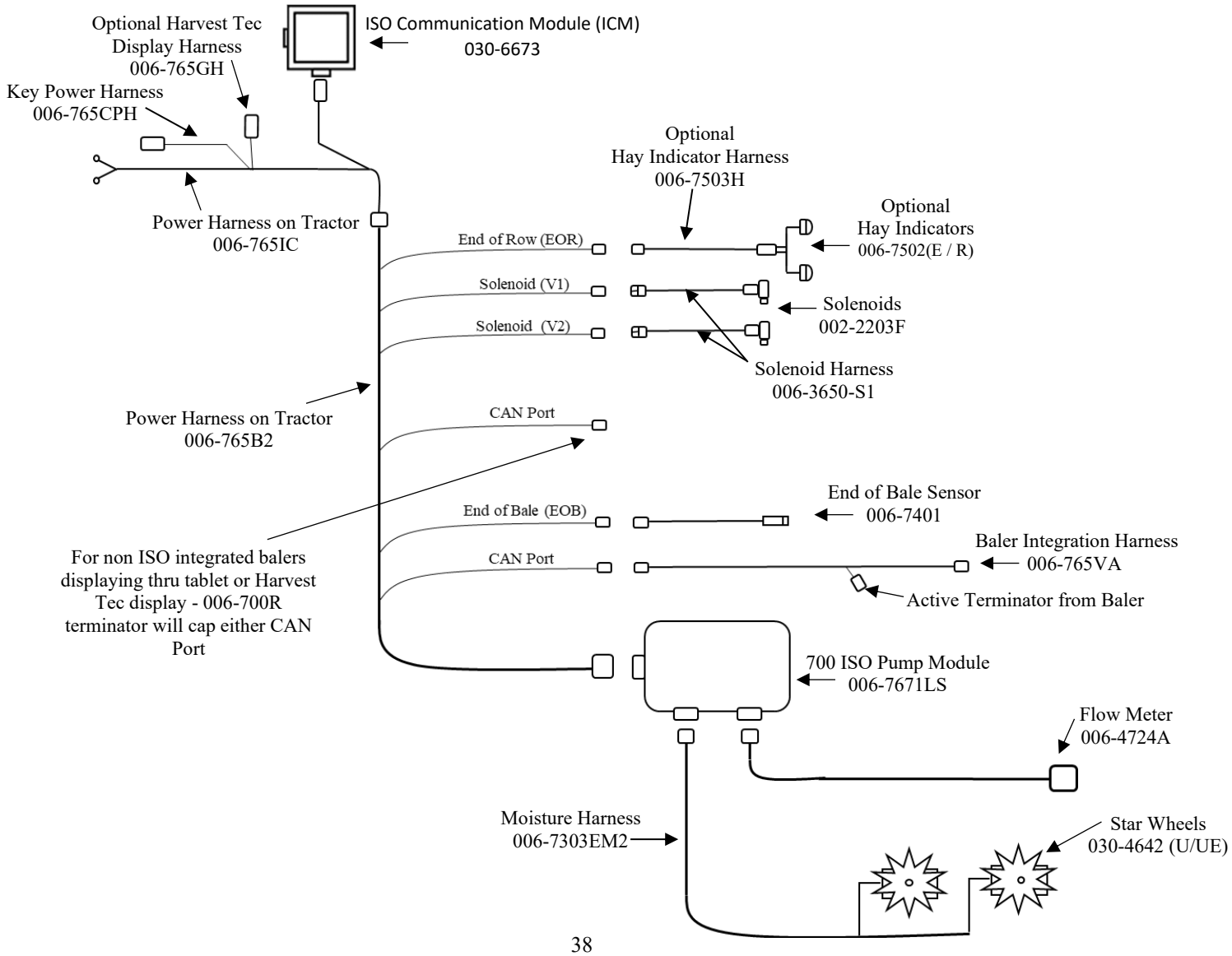

Pin Outs

Integrated Control Module (ICM) on Tractor Harness 006-765IC

(Deutsch Plug Number: DTM06-12SA)

Pin 1	Red	+12V from ECU
Pin 2	Purple	Signal Wire
Pin 3	Red/White	+12V CAN X
Pin 4	Black/White	Ground CAN X
Pin 5	Orange	CAN X Hi
Pin 6	Blue	CAN X Lo
Pin 7	Green	ISO CAN Lo
Pin 8	Yellow	ISO CAN Hi
Pin 9	White	GPS Expansion 1
Pin 10	Gray	GPS Expansion 2
Pin 11	Brown	GPS Expansion 3
Pin 12	Black	Ground from ECU

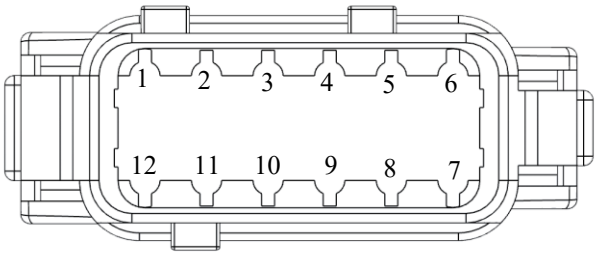

ISOBUS Plug on Tractor Harness 006-765IC

(Deutsch Plug Number: DT04-4P)

Pin 1	Red	+12V from ECU
Pin 2	Yellow	ISO CAN Hi
Pin 3	Green	ISO CAN Lo
Pin 4	Black	Ground from ECU

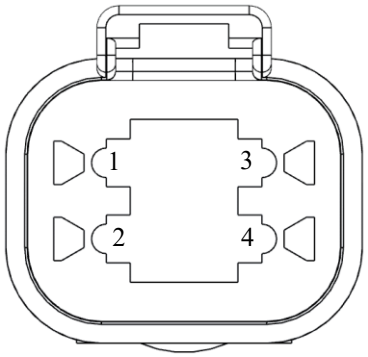

Power / Communication Tractor Harness 006-765IC at Baler Hitch

(Deutsch Plug Number: HDP24-24-18PN)

Pin 1	Not Used	----
Pin 2	Yellow	ISO CAN Hi
Pin 3	Green	ISO CAN Lo
Pin 4	Red	+12V Power to ECU
Pin 5	Black	Ground to ECU
Pin 6	Red	+12V From Battery
Pin 7	Not Used	----
Pin 8	Black	Ground From Battery
Pin 9	Not Used	----
Pin 10	Purple	Signal Wire
Pin 11	Red/White	+12V CAN X
Pin 12	Black/White	Ground CAN X
Pin 13	Orange	CAN X Hi
Pin 14	Blue	CAN X Lo
Pin 15	White	GPS Expansion 1
Pin 16	Gray	GPS Expansion 2
Pin 17	Brown	GPS Expansion 3
Pin 18	Not Used	----

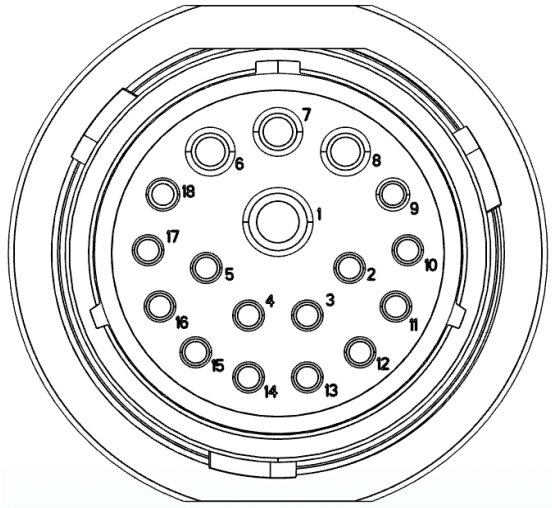

Power / Communication Baler Harness 006-765B2 at Hitch

(Deutsch Plug Number: HDP26-24-18SN)

Pin 1	Not Used	----
Pin 2	Yellow	ISO CAN Hi
Pin 3	Green	ISO CAN Lo
Pin 4	Red	+12V Power to ECU
Pin 5	Black	Ground to ECU
Pin 6	Red	+12V From Battery
Pin 7	Not Used	----
Pin 8	Black	Ground From Battery
Pin 9	Not Used	----
Pin 10	Not Used	----
Pin 11	Not Used	----
Pin 12	Not Used	----
Pin 13	Not Used	----
Pin 14	Not Used	----
Pin 15	Not Used	----
Pin 16	Not Used	----
Pin 17	Not Used	----
Pin 18	Not Used	----

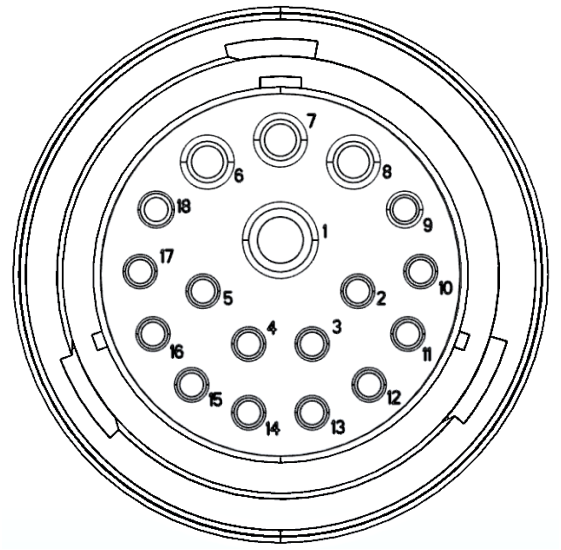

Power / Communication Baler Harness 006-765B2 at IPM Module

(Deutsch Plug Number: HDP24-24-18SN)

Pin 1	Not Used	----
Pin 2	Yellow	ISO CAN Hi
Pin 3	Green	ISO CAN Lo
Pin 4	Red	+12V Power to ECU
Pin 5	Black	Ground to ECU
Pin 6	Red	+12V From Battery
Pin 7	Not Used	----
Pin 8	Black	Ground From Battery
Pin 9	Not Used	----
Pin 10	Orange/White	+12V Power to EOR
Pin 11	Orange/Black	Ground to EOR
Pin 12	Purple/Green	EOR Signal
Pin 13	Blue/White	EOB Signal
Pin 14	Gray/Red	+12V Power to Solenoid 1
Pin 15	White/Black	Ground to Solenoid 1
Pin 16	Orange/Red	+12V Power to Solenoid 2
Pin 17	White/Black	Ground to Solenoid 2
Pin 18	Not Used	----

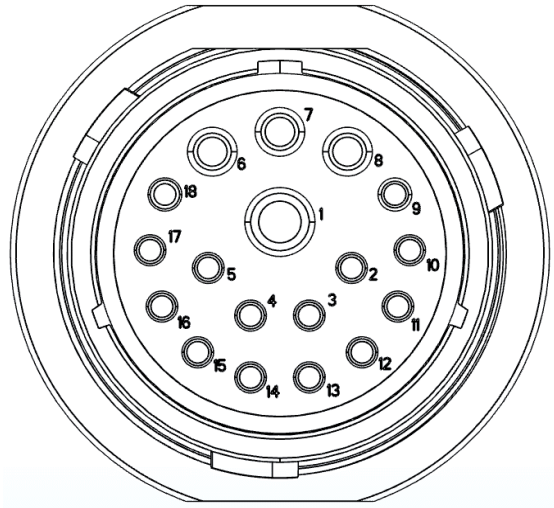

*IPM Module Whip Plug- Pin # 5 Not Used

Solenoid 1 Plug on Baler Harness 006-765B2

(Deutsch Plug Number: APTIV 12052641)

Pin B	Gray/Red	+12V to Solenoid 1
Pin A	White/Black	Ground to Solenoid 1

Solenoid 2 Plug on Baler Harness 006-765B2

(Deutsch Plug Number: APTIV 12052641)

Pin B	Orange/Red	+12V to Solenoid 2
Pin A	White/Black	Ground to Solenoid 2

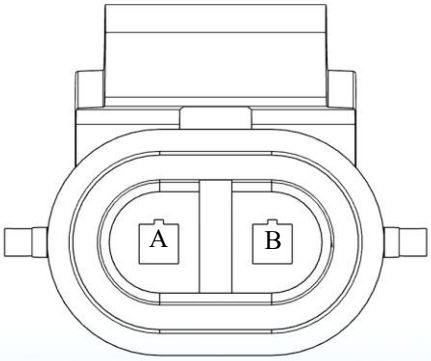

CAN / IDM on Baler Harness 006-765B2

(Deutsch Plug Number: DT06-4S)

Pin 1	Red	+12V to ECU
Pin 2	Yellow	ISO CAN Hi
Pin 3	Green	ISO CAN Lo
Pin 4	Black	Ground to ECU

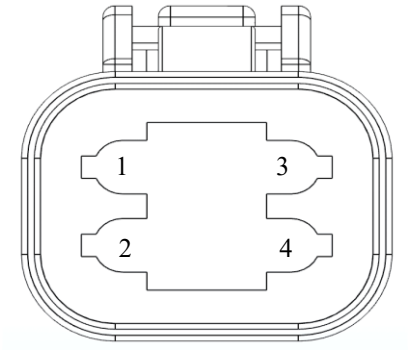

End of Bale Sensor Plug on Baler Harness 006-765B2

(Deutsch Plug Number: DT06-3S)

Pin 1	Orange/White	+12V to End of Bale Sensors
Pin 2	Orange/Black	Ground to End of Bale Sensors
Pin 3	Blue/White	Signal

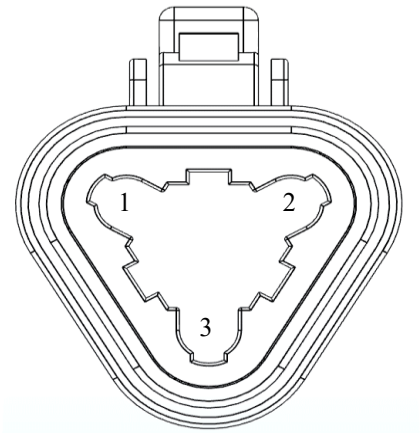

End of Row Sensors Plug on Baler Harness 006-765B2

(Deutsch Plug Number: DT06-3S)

Pin 1	Orange/White	+12V to End of Bale Sensors
Pin 2	Orange/Black	Ground to End of Bale Sensors
Pin 3	Blue/White	Signal

Integration Harness Plug on Baler Harness 006-765VA

(Plug: APTIV 12052848)

Pin A	Not Used	----
Pin B	Red	TBC Power
Pin C	Not Used	----
Pin D	Gray	TBC Ground
Pin E	Orange	CAN Hi
Pin F	Blue	CAN Lo

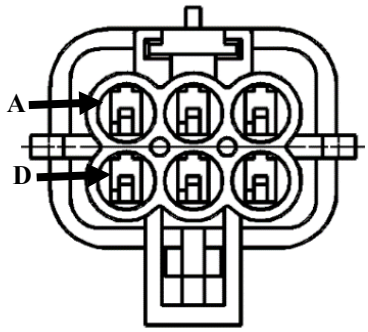

Pump Connection on 700 Controller Harness

(16 AWG Two-Wire Plug)

Pin 1	Red	Power to Pump
Pin 2	Black	Ground to Pump

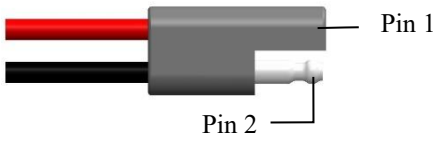

Harvest Tec LLC. Warranty and Liability Agreement

Harvest Tec, LLC. will repair or replace components that are found to be defective within 12 months from the date of manufacture. Under no circumstances does this warranty cover any components which in the opinion of Harvest Tec, LLC. have been subjected to negligent use, misuse, alteration, accident, or if repairs have been made with parts other than those manufactured and obtainable from Harvest Tec, LLC.

Our obligation under this warranty is limited to repairing or replacing free of charge to the original purchaser any part that in our judgment shows evidence of defective or improper workmanship, provided the part is returned to Harvest Tec, LLC. within 30 days of the failure. If it is determined that a non-Harvest Tec manufactured product has been used inside the Harvest Tec applicator system where the failure occurred, then Harvest Tec reserves the right to deny the warranty request at their discretion. Parts must be returned through the selling dealer and distributor, transportation charges prepaid.

This warranty shall not be interpreted to render Harvest Tec, LLC. liable for injury or damages of any kind, direct, consequential, or contingent, to persons or property. Furthermore, this warranty does not extend to loss of crop, losses caused by delays or any expense prospective profits or for any other reason. Harvest Tec, LLC. shall not be liable for any recovery greater in amount than the cost or repair of defects in workmanship.

There are no warranties, either expressed or implied, of merchantability or fitness for particular purpose intended or fitness for any other reason. This warranty cannot guarantee that existing conditions beyond the control of Harvest Tec, LLC. will not affect our ability to obtain materials or manufacture necessary replacement parts.

Harvest Tec, LLC. reserves the right to make design changes, improve design, or change specifications, at any time without any contingent obligation to purchasers of machines and parts previously sold.

Revised 1/24

HARVEST TEC, LLC.
P.O. BOX 63
2821 HARVEY STREET
HUDSON, WI 54016 USA
PHONE: 715-386-9100
FAX: 715-381-1792
Email: info@harvesttec.com