Installation Manual

Model 796K

110 Gallon Preservative Applicator

for Krone Large Square Balers

HarvestTec®

EST. 1976

796K-26-INST-Imp&Metric
9/26

Table of Contents

	PAGE
Introduction	**3**
Tools Needed	**3**
System Overview	**4**
Tank and Tank Saddle	**5-6**
Pump Plate Mounting	**7-8**
Pump Plate Breakdown	8
Drain / Fill Line	**9-10**
Parts Bags and Hoses	10
Spray Shields	**11-14**
Install Kit 4514C	11
Install Kit 4515C	12
Install Kit 4539C	13
Install Kit 4541C	14
Solenoids and Hose Routing	**15-16**
Solenoid Breakdown	16
Main Wire Harness and Connections	**17**
Main Controls and Wire Harness	17
Star Wheel Moisture Sensors	**18-22**
Star Wheel Breakdown	19
End of Bale Sensor (EOB)	**23-24**
Tractor Setup	**25**
Display Options	**26-29**
Optional Harvest Tec Display Kit	27
Optional Android Tablet Display Kit	28
Optional iPad Display Kit	28
Optional ISO Display Adapters	29
Optional Krone ISO Baler Integration	30-31
Wire Diagram	**32**
Pin Outs	**33-35**
Warranty Statement	**36**

Introduction

Thank you for purchasing the 700 Series Preservative Applicator. This applicator system has been designed to be operated through a number of different displays and tablets using the Precision Baling App. These include the Harvest Tec VT display, the baler's ISOBUS and display on the baler monitor (if compatible/applicable), or iOS/Android Tablet (not included).

The 700 Series Preservative Applicator System is designed to apply Baler's Choice buffered propionic acid (made by Harvest Tec) to the forage crop as it is baled. **Use of alternative products may cause system complications and voids Harvest Tec manufacturer's warranty.** Failure to follow instructions can result in personal injury or equipment malfunction. If you need parts for the system, please view the Parts Breakdown within this manual and contact your local authorized dealer to order replacement parts.

Right and Left sides are determined by facing in the direction of forward travel.

System Requirements

Made for Harvest Tec Display, Baler Integration, or Tablet
For best performance ensure all displays are running the latest operating system.

Tools Needed:

- Standard wrench set
- Electric drill and bits
- Side cutter
- Crescent wrench
- Standard screwdriver
- Center punch
- Standard nut driver set
- Standard socket set
- Hammer
- Metal cutting tools
- Hose cutter

System Overview

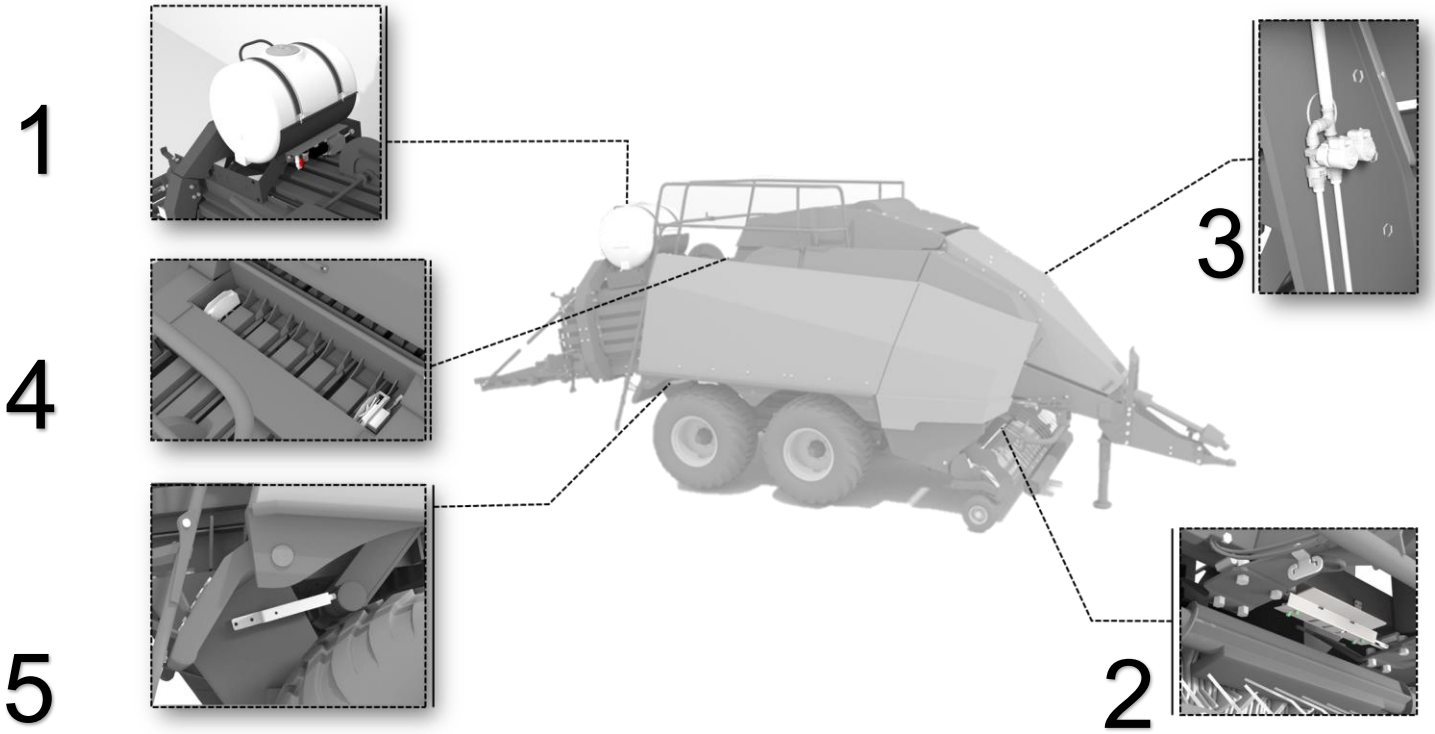

The 700 series applicator system consists of five main areas of installation, these include:

1) Tank, Saddle, and Pump, Installation

This will mount on the bale chute towards the rear of the baler. All mounting and parts should be verified prior to beginning installation. Follow *Installation of Tank, Saddle, and Pump* section for step-by-step instruction.

2) Spray Shield Installation

The spray shield assembly is designed to spray the hay evenly as the baler picks it up. This holds the tips and is connected to plumbing to apply preservative as precisely as possible. Follow the *Installation* of *Spray Shield* section for sketches of the spray shield nozzle holders and step-by-step instruction.

3) Solenoid Installation

The dual solenoid setup is to be mounted as close to the spray shield as possible. This will provide the best result to ensure the proper output of preservative is applied through the nozzles. Follow *Installation of Solenoids and hose routing* section for step-by-step instructions.

4) Star Wheel Installation

This is the moisture setup for the applicator system, installation will be done on top of the bale chamber so the star wheels can make sufficient contact with the bale. Follow *Installation of Star Wheel Moisture Sensor* sections for step-by-step instruction.

5) End of Bale Installation

The end of bale sensor determines the position of the needles on the baler. When the needles cycle the sensor communicates this information to the 700 series. Installation of this sensor is required for use with the Harvest Tec Virtual Terminal. Follow *Installation of End of Bale Sensor* section for step-by-step guide.

110 Gallon - Tank, Saddle, & Legs

795K Tank Saddle Kit (030-0490K-TK) *Krone Gen 5 Balers*
796K Tank Saddle Kit (030-0491K-TK) *Krone 12130 & HDP Balers*
(excluding 870 HDP – refer to tank kit 030-0491V-TK)

Tank Lid:
Part#: 005-9022H

Handrail
Part#: 001-6707HR

Tank-110 gallon
Part#: 005-9208

Tank Straps
Part#: 001-4402B

Tank Saddle
Part#: 001-6707A

Tank Fitting
Part#: 005-9100

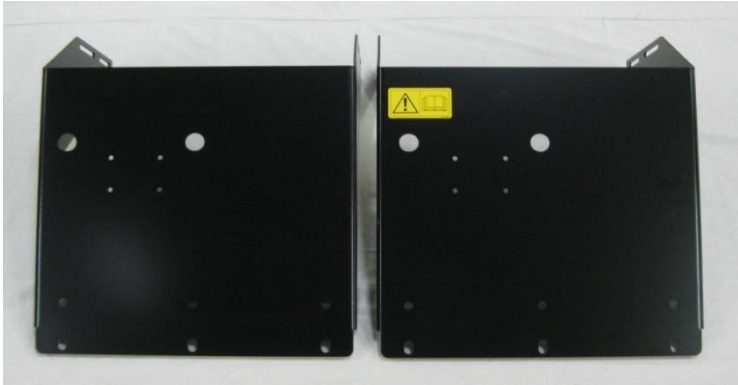

Krone Balers
Part#: 001-6707KA (x2)

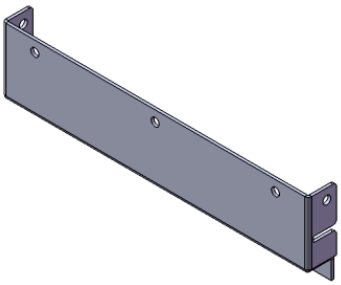

Leg Extension Brackets*
Part# 001-6707KB (x2)

*For 2010 and later models

795K Complete Tank Saddle Kit Part# 030-0490K-TK

796K Complete Tank Saddle Kit (with Extension Brackets) Part# 030-0491K-TK

Tank and Tank Saddle - Installation

Krone 12130 & HDP Balers

(excluding 870 HDP – refer to 796V Install Manual)

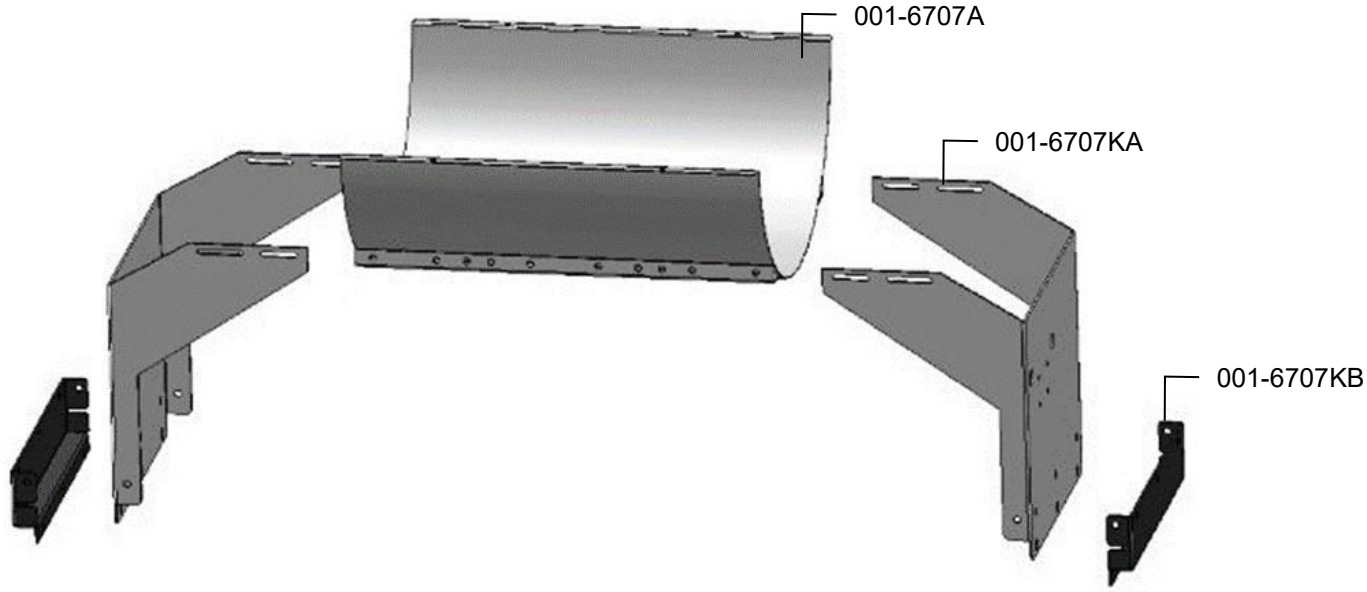

1. Locate parts bag 3. Install both saddle legs (001-6707KA) onto the saddle (001-6707A) with eight 3/8 x 1 1/4" Bolts, locks and flat washers. The mounting slots in the legs will attach to the first and second weld nuts in from each end, of the saddle, on both sides. *Install leg extensions 001-6707KB if the baler was manufactured after 2010. Pre-2010 models do not need the extensions.

2. Once legs and saddle are loosely attached measure the distance from the top outside corners of the bale chamber where the saddle will be attached. Move legs in or out so the inside edges will match this dimension. Also try to center the saddle within these dimensions. <u>Do not fully tighten down bolts until unit is mounted on the baler</u>

3. Mount the tank legs and saddle on the baler just behind the compression arm. If holes are not present, mark holes and drill with a 9/16" drill bit. The tank legs bolt to the baler with six ½" x 1 ¾" button head allen bolts, locks, flat washers, and hex nuts. Note: handrail is pointing toward front of baler. Tank cap should be parallel to the ground.

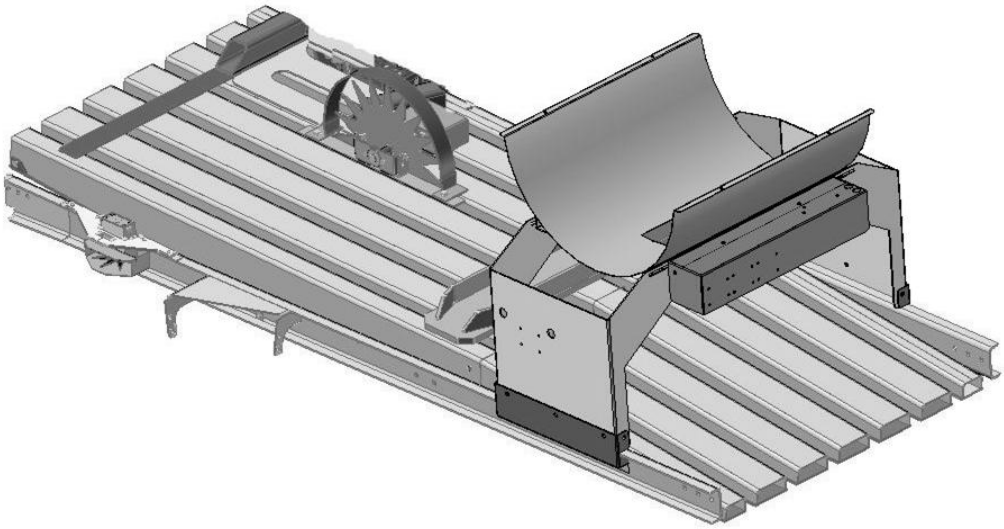

Pump Plate Mounting Kit (PMP-7636SMT)

Attach Pump Plate to Tank Saddle (without pump plate holders)

1. Attach (001-4648XB) Bracket to main saddle. Holes in bracket will line up with holes in main saddle. You may need to remove two of the bolts used to attach saddle to legs for bracket to fit. Reuse bolts to secure bracket to saddle and legs. Note some Krone and Claas balers will require you to mount the pump assembly facing the rear of the baler due to interference with balers compression ring. However, most models will be facing the knotters.

2. Connect control (006-7671LS) to pump plate (PMP-7636P) with four 10/32” x 5/8” Philips flat head screws and nylock nuts.

3. Attach triangle plug from flow meter to controls and rubber molded plug from pump to mating plug from control

4. Attach pump plate assembly (PMP-7636P) to bracket (001-4648XB) with two 3/8” x 3/4" flange bolts and nuts.

5. Locate parts bag 16. Locate elbow (003-EL3412) and thread into bottom of tank.

6. Locate parts bag that was with pump plate assembly and choose fitting to place in valve next to filter.

7. Run 1/2” hose from bottom of tank to valve on pump plate and secure with hose clamps.

8. Chose and thread fitting into pump discharge.

Note: Pressure washing the pump plate can lead to water damage internally of the ISO Pump Module (IPM).
DO NOT PRESSURE WASH IPM MODULE

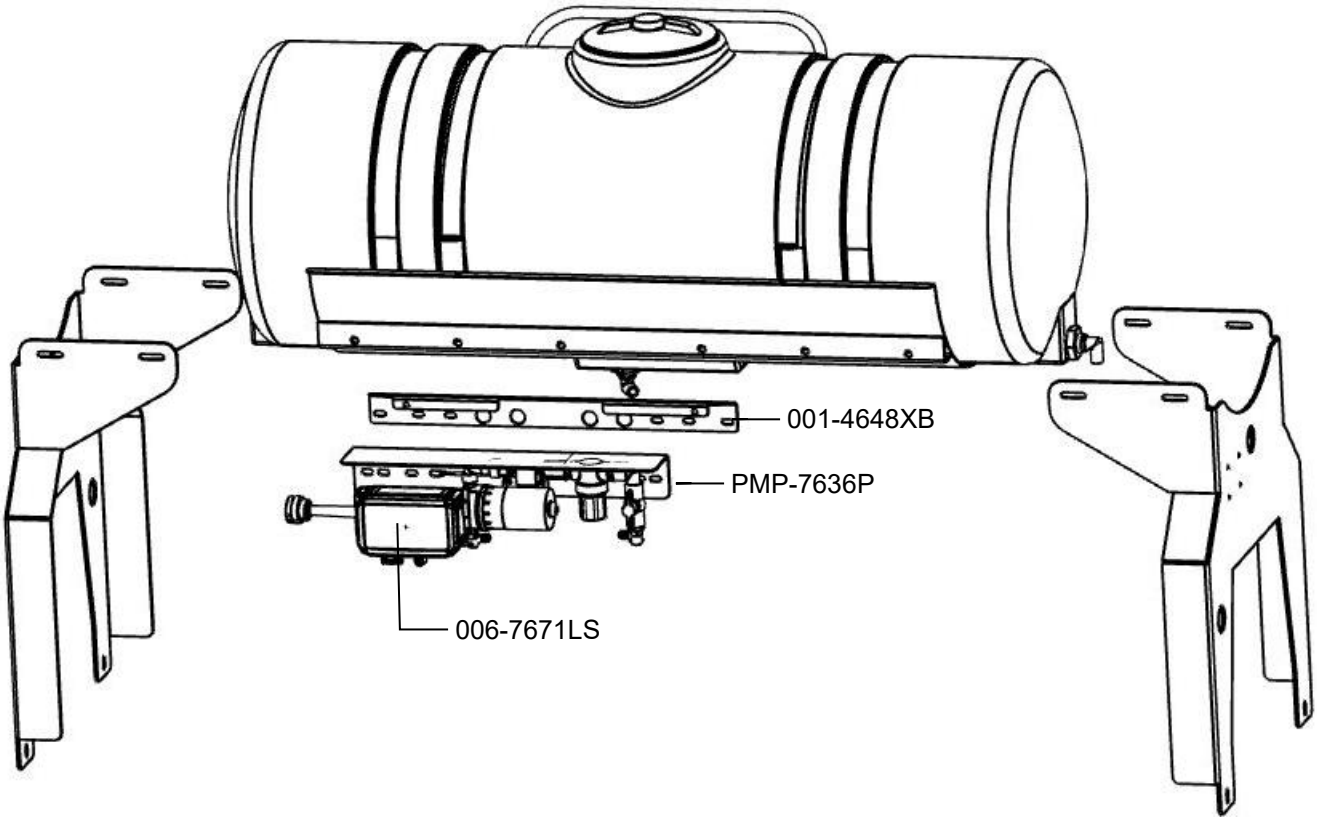

Parts Breakdown for Pump Assembly

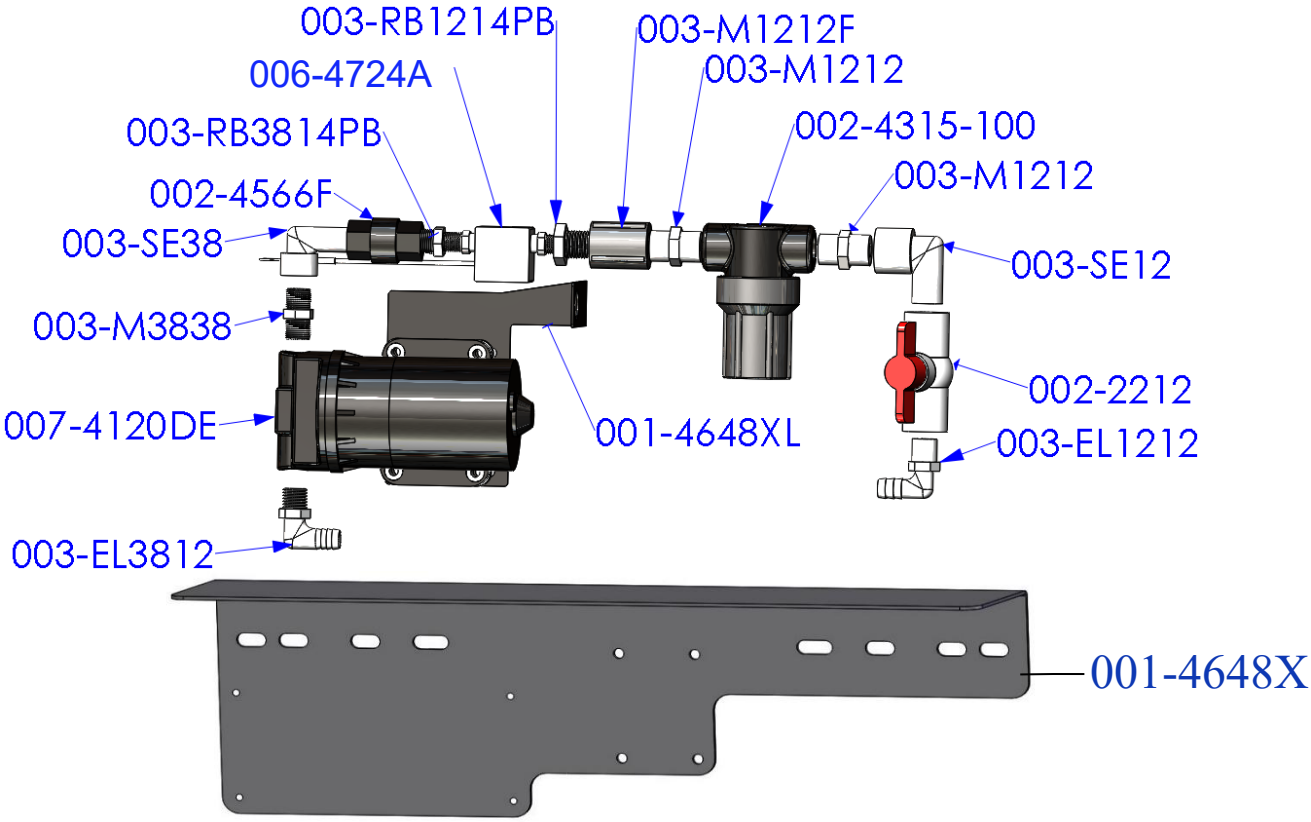

Part#	Description	Qty	Part#	Description	Qty
003-EL3812	3/8”MPT X 1/2"HB Elbow	1	003-M1212	1/2" Union	2
007-4120DE	700/300 Series Pump	1	002-4315-100	1/2" Line Strainer-100 Mesh	1
003-M3838	3/8” x 3/8” Union	1	003-SE12	1/2" Street Elbow	1
003-SE38	3/8” Street Elbow	1	002-2212	1/2" Ball Valve	1
002-4566F	3/8” Check Valve	1	003-EL1212	1/2"MPT x 1/2"HB	1
003-RB3814PB	RB 3/8” x 1/4” Reducer	1	001-4648XL	300 Pump Support	1
006-4724A	Flow Meter-Deutsch Plug	1	001-4648X	Pump Plate Mount	1
003-RB1214PB	RB 1/2" x 1/4" Reducer	1	003-A1212*	1/2" MPTx1/2”HB(Not Pictured)	1
003-M1212F	1/2" Coupler	1	003-A3812*	3/8" MPTx1/2”HB(Not Pictured)	1

*Note: Due to alternative baler designs, elbow 003-EL3812 can be replaced by straight fitting 003-A3812. Elbow 003-EL1212 can also be replaced by straight fitting 003-A1212. Both straight fittings are included.

Filter Bowl Replacement Parts

002-4315F	Filter Bowl
002-4315D	Filter Bowl Gasket
002-4315A	Replacement Screen-100 Mesh
002-4315B	Replacement Screen- 80 Mesh

Pump Plate Mounting – PMP-7636SMT

001-4648XB	Pump Plate Adapter

Pump Plate Mounting – PMP-7636MMT

001-4648XB	Pump Plate Adapter
001-6707FU	Pump Plate Holder (qty 2 needed)

UHD Pump Plate Mounting – PMP-7636UMT

001-4648U	Remote Pump Plate Mount (qty 2 needed)

Completed Assembly – PMP-7636P

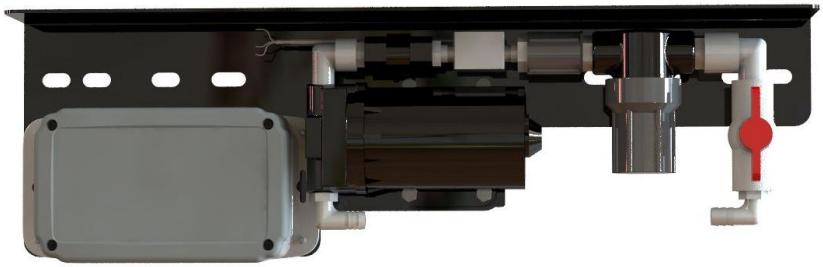

<u>Drain/Fill Line Kit</u> (030-0493DFK)

1. Locate Parts Bag 1.
2. Thread 3/4” elbow fitting into end of tank.
3. Run 3/4" hose from the elbow down the frame to the bottom of the baler.
4. Drill 1/4” (7mm) holes to accept the Valve Holder Bracket and use 5/16” x 1” self-tapping screws.
5. Connect valve assembly to other end of hose. Place hose clamps on both ends.
6. Secure hose to frame using cable locks.
7. Install supplied safety decals (DCL-8001 & DCL-8005) next to the ball valve assembly.

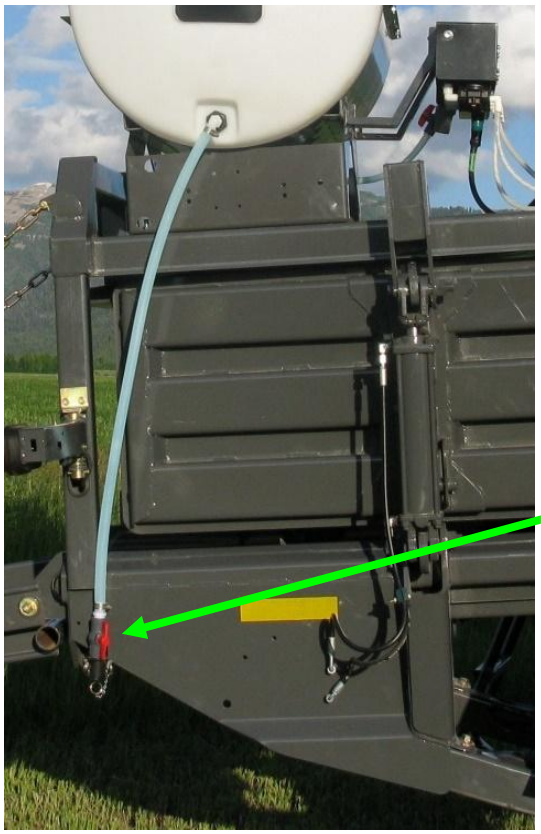

Parts Bags Breakdowns

PBA-1

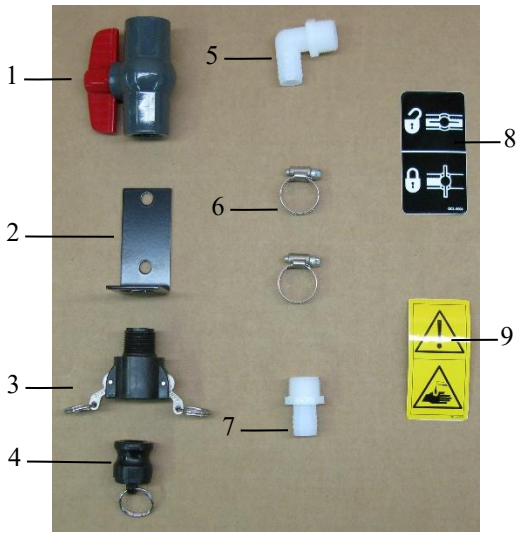

PBP-16

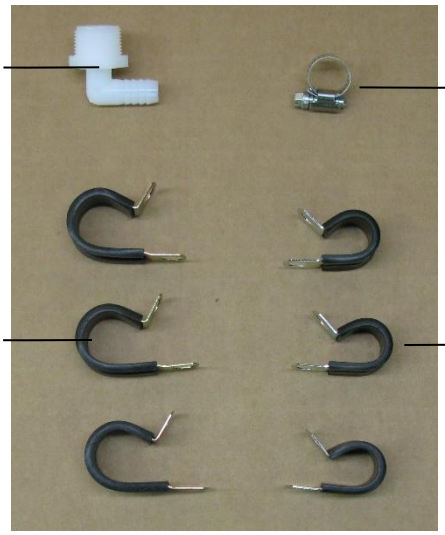

Ref	Description	Part #	Qty
1	3/4" Ball Valve	002-2200	1
2	Valve Holder	001-6702H	1
3	Female Coupler	002-2204A	1
4	Male Shut-Off Plug	002-2205G	1
5	3/4” x 3/4" Elbow	003-EL3434	1
6	#10 Hose Clamp	003-9004	2
7	3/4" x 3/4" Straight Fitting	003-A3434	1

Complete Drain Fill Kit 030-0493DFK
(Includes 3/4" tubing below)

Ref	Description	Part #	Qty
8	Valve Decal	DCL-8004	1
9	Hazard Decal	DCL-8001	1
10	3/4" x 1/2" Elbow	003-EL3412	1
11	3/4" Jiffy Clip	008-9010	3
12	#6 Hose Clamp	003-9003	1
13	Small Jiffy Clip	008-9009	3

Hoses

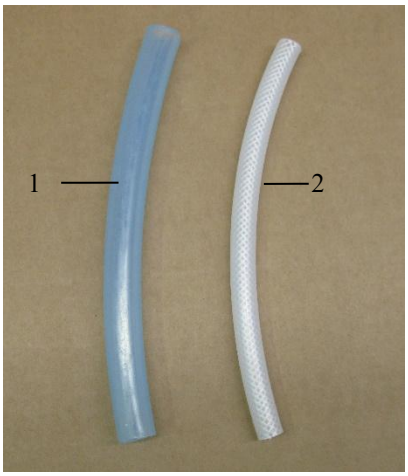

Ref	Description	Part#	Qty
1	1/2” Hose (Tank to Solenoid)	002-9001	30’
2	1/4" Hose (Solenoid to Tips)	002-9016	5’
NP	3/4" Hose (Drain/Fill Line)	002-9002	10’

Spray Shield The spray shield assembly is designed to spray the hay evenly as the baler picks it up.

Installation Kit 4514C

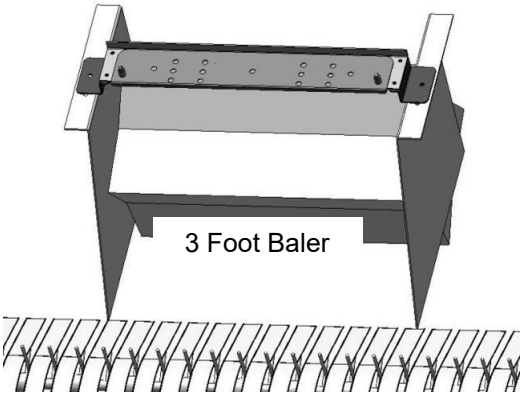

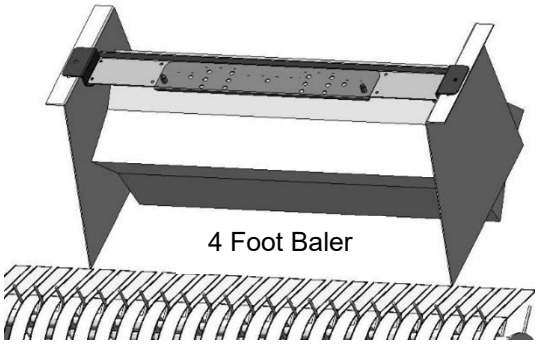

Locate the two mounting brackets (001-4431KB). In the 4' baler, these brackets are positioned so the spray shield is dropped down from the flywheel. On the 3' baler, these brackets are positioned using the top hole on each side to raise the spray shield up from the rotor. Use the top hole on the baler for mounting the brackets. These brackets will be secured with two 3/8" x 1" bolt and flats, locks, and nuts. Then the spray shield holder (001-4431KA) spans across the throat of the baler and bolts to mounting brackets so the pins are on the top side. The holder has a formed flange on the backside that should be flush with the back of the mounting brackets. The shield holder will be fastened to the mounting brackets with four 5/16x1" bolts with flats, locks and nuts (2 on each side). In the case of the 3' (1M) balers, there are additional holes for mounting the holder to the brackets. For 3' (1M) wide balers 7-1/2" (19cm) will need to be cut off the ends the shield holder. Place the spray shield assembly on top of the shield holder and secure with lynch pins.

4514C Installation Kit

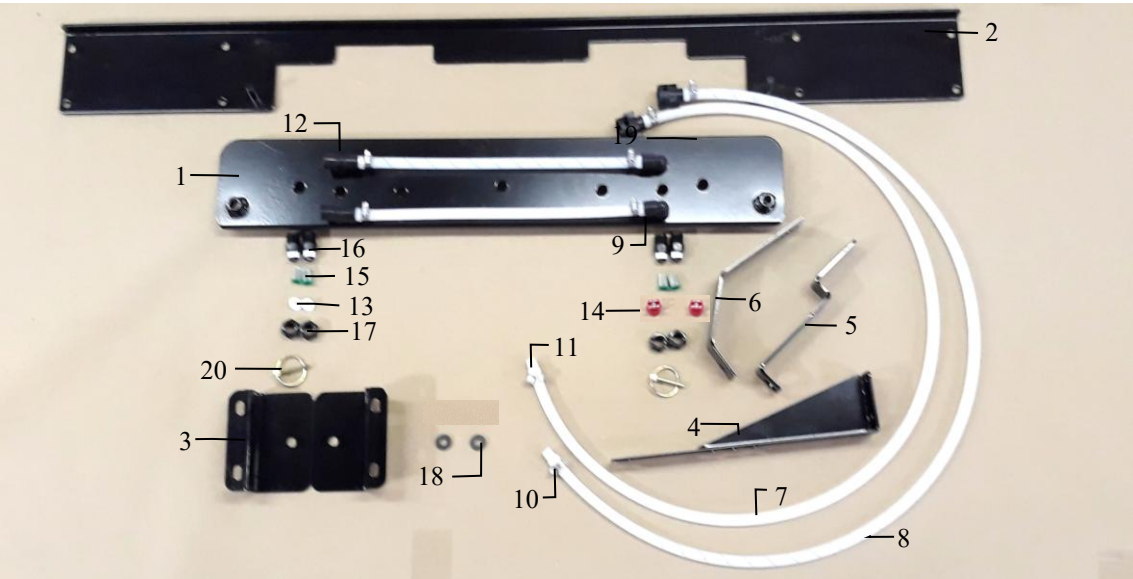

Ref	Description	Part #	Qty	Ref	Description	Part #	Qty
1	Spray Shield	001-4431B	1	11	1/4" x 1/4" Straight Fitting	003-A1414	8
2	Spray Shield Holder	001-4431KA	1	12	1/4" Tee Fitting	003-TT14SQ	2
3	Shield Mounting Bracket	001-4431KB	2	13	1/4" Tip	004-XR11008VK	2
4	End of Bale Bracket	001-4648	1	14	1/4" Tip	004-XR11004VK	2
5	End of Bale Bracket	001-4648K	1	15	Tip Strainer-100 Mesh	004-1203-100	4
6	End of Bale Bracket	001-4648K2	1	16	Nylon Nozzle Body	004-4722	4
7	1/4" Braided Hose	002-9016	5	17	Nylon Nozzle Cap	004-4723	4
8	1/4" Braided Hose – Blue	002-9016B	5	18	Rubber Washer	004-1207W	2
9	1/4" 90 Deg. Elbow	003-SE14F	2	19	Female Quick Connect	004-1207H	2
10	Mini Hose Clamp	003-9002	8	20	3/16" Lynch Pin	008-4576	2
					Complete Installation Kit	**030-4514C**	

Installation Kit 4515C

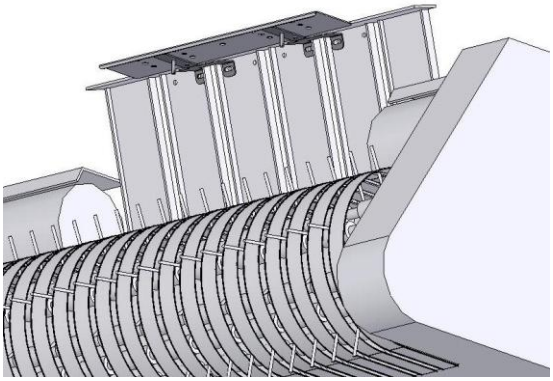

Non-HDP balers

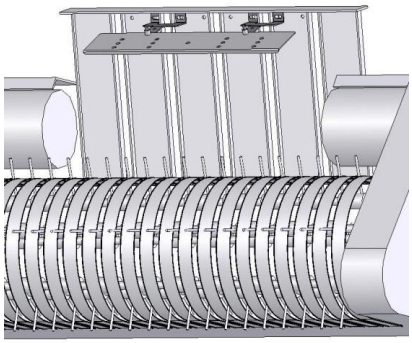

All HDP balers

Locate the four center stuffer guards (on narrower models of baler, there may be only four stuffer guards). Remove the nuts and bolts indicated above that fasten the stuffer guards to the cross member above the baler throat. Replace the hardware that you removed with the hardware included in the parts bag (M10x30 bolts, M10 lock washers, and M10 nuts) and bolt the spray shield holder (001-4435KS in place as shown above. Use the above pictures to determine the position of the spray shield holder depending on baler type. Position the spray shield (001-4435AS) on top of the spray shield holders with the pins from the spray shield holder extending through the pipes welded to the spray shield. Adjust the spray tips so they point towards the throat of the baler. Adjust the spacing of the spray shield holder as needed and tighten the hardware.

Model 4515C Installation Kit

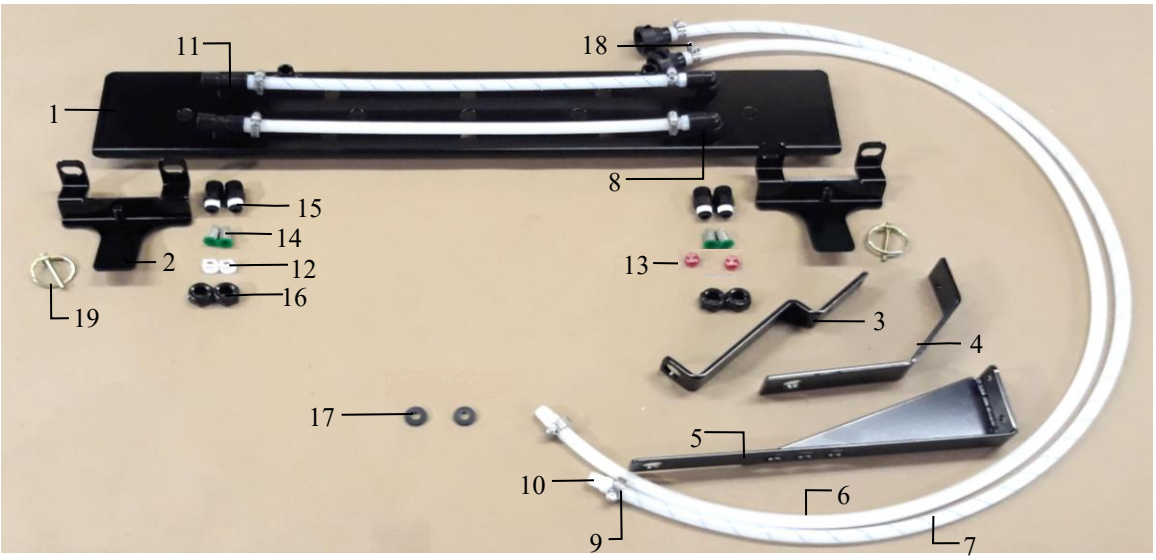

Ref	Description	Part #	Qty	Ref	Description	Part #	Qty
1	Spray Shield	001-4435AS	1	11	1/4” Tee Fitting	003-TT14SQ	2
2	Spray Shield Holder	001-4435KS	2	12	1/4” Tip	004-XR11008VK	2
3	Krone End of Bale Bracket	001-4648K	1	13	1/4” Tip	004-XR11004VK	2
4	Krone End of Bale Bracket	001-4648K2	1	14	Tip Strainer-100 Mesh	004-1203-100	4
5	End of Bale Bracket	001-4648	1	15	Nylon Nozzle Body	004-4722	4
6	1/4” Braided Hose	002-9016	5.5	16	Nylon Nozzle Cap	004-4723	4
7	1/4” Braided Hose–Blue	002-9016B	5.5	17	Rubber Washer	004-1207W	2
8	1/4” 90 Deg. Elbow	003-SE14F	2	18	Female Quick Connect	004-1207H	2
9	Mini Hose Clamp	003-9002	8	19	3/16” Lynch Pin	008-4576	2
10	1/4" x 1/4" Straight Fitting	003-A1414	8				
					Complete Installation Kit	**030-4515C**	

Installation Kit 4539C

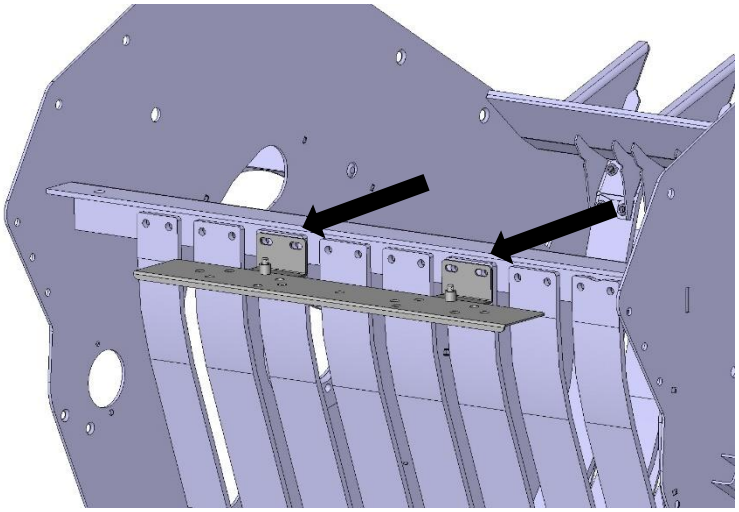

Locate the center stuffer guards and remove the nuts and bolts indicated above that fasten the stuffer guards to the cross member above the baler throat. Replace the hardware that you removed with the hardware included in the parts bag (M10x30 bolts, M10 lock washers, and M10 nuts) and bolt the spray shield holder (001-4435KX*)* in place as shown above. Use the above pictures to determine the position of the spray shield holder depending on baler type. Position the spray shield (001-4435AS) on top of the spray shield holders with the pins from the spray shield holder extending through the pipes welded to the spray shield and secure with lynch pins. Adjust the spray tips so they point towards the throat of the baler.

4539C Installation Kit

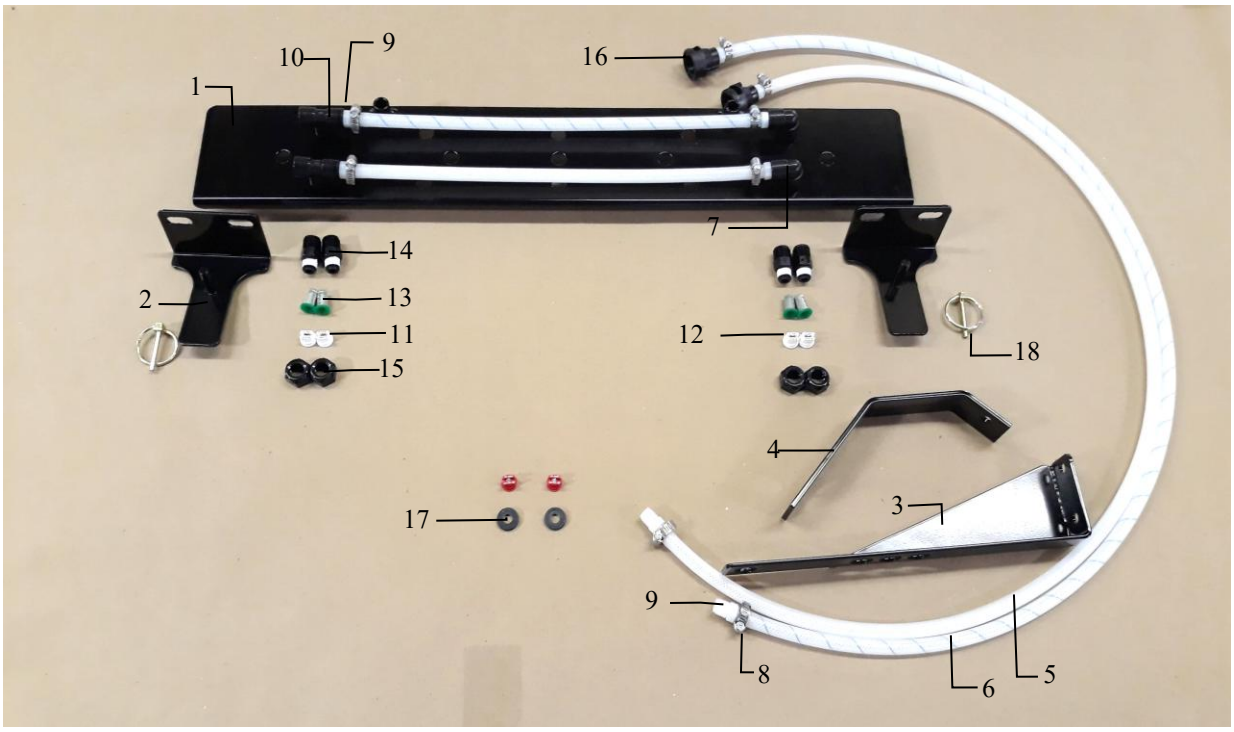

	Description	Part #	Qty	Ref	Description	Part #	Qty
1	Spray Shield	001-4435AS	1	10	1/4” Tee Fitting	003-TT14SQ	2
2	Shield Mounting Bracket	001-4435KX	2	11	1/4” Tip	004-XR11008VK	2
3	End of Bale Bracket	001-4648	1	12	1/4” Tip	004-XR11004VK	2
4	Krone EOB Bracket	001-4648K2	1	13	Tip Strainer-100 Mesh	004-1203-100	4
5	1/4” Braided Hose	002-9016	5.5	14	Nylon Nozzle Body	004-4722	4
6	1/4” Braided Hose–Blue	002-9016B	5.5	15	Nylon Nozzle Cap	004-4723	4
7	1/4” 90 Deg. Elbow	003-SE14F	2	16	Female Quick Connect	004-1207H	2
8	Mini Hose Clamp	003-9002	8	17	Rubber Washer	004-1207W	2
9	1/4” x 1/4” Straight Fitting	003-A1414	8	18	3/16” Lynch Pin	008-4576	2

*Tip colors subject to change

Complete Installation Kit **030-4539C**

Installation Kit 4541C

Center spray shield on the top of the rotor shield and align with formed edge. Mark and cut out a 2 1/2” x 19 3/4” (64mm x 47cm) section of the transition shield between the top auger and the rotor. The cutout section should be centered left to right and the front of the cutout should be aligned with the formed edge.

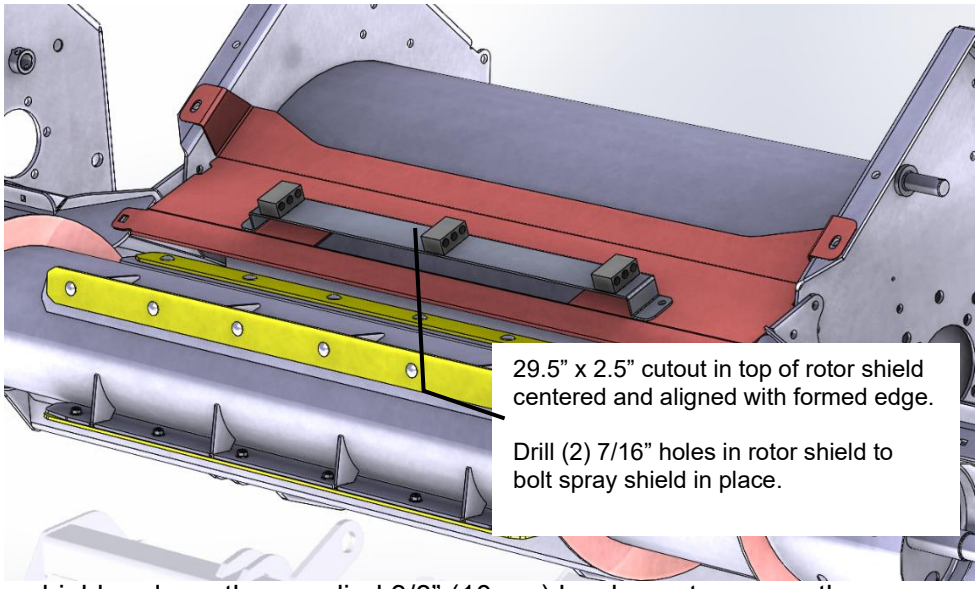

Position the spray shield assembly with the formed flanged to the rear, centered over the cutout, and use the holes in the tabs to locate the mounting holes. Drill two 7/16” (11mm) holes through the transition shield and use the supplied 3/8” (10mm) hardware to secure the spray shield assembly to the transition shield. Route the attached hoses and check valves towards the right side of the baler.

4541C Installation Kit

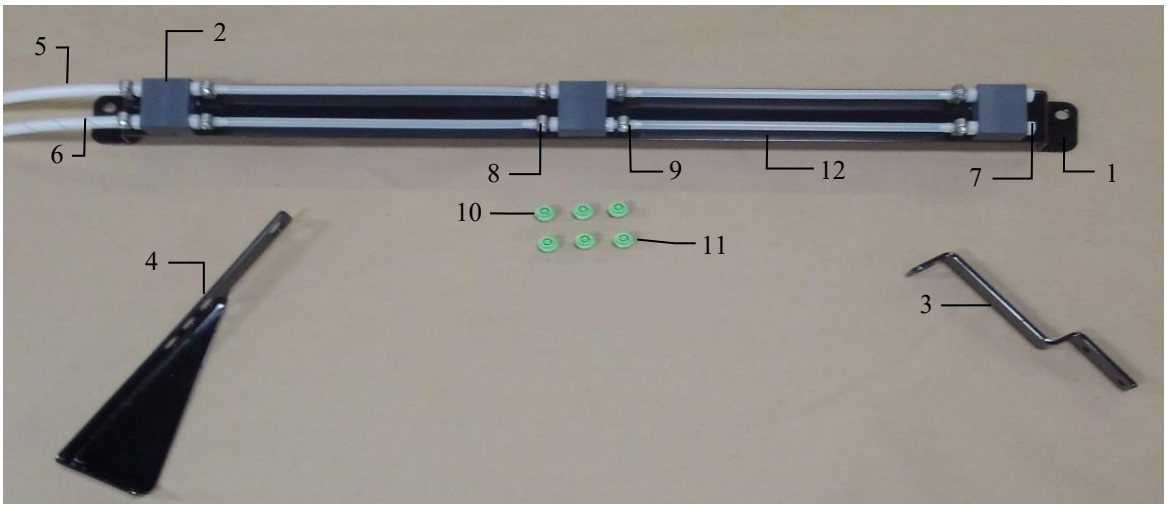

Ref	Description	Part #	Qty	Ref	Description	Part #	Qty
1	Spray Shield	001-4435NSX	1	8	Mini Hose Clamp	003-9002	12
2	Spray Shield Block	001-4435NSB	3	9	1/4” x 1/4” Straight Fitting	003-A1414	12
3	End of Bale Bracket	001-4648	1	10	1/4” NPT Tip	004-T8003-PT	3
4	Krone End of Bale Bracket	001-4648K	1	11	1/4” NPT Tip	004-T8005-PT	3
5	1/4” Braided Hose	002-9016	4	12	1/4" EVA Tubing	002-9006	4
6	1/4” Braided Hose - Blue	002-9016B	4	NP	Rubber Washer	004-1207W	2
7	1/4” Hex Plug	003-F14	2	NP	Female Quick Connect	004-1207H	2

*Tip color subject to change

Complete Installation Kit **030-4541C**

Solenoids and Hose Routing

A. Once Spray Shield is mounted, locate the Solenoid Kit SOL-3SP-LS. Pulsing Solenoids (002-2203F) come pre-installed on the Solenoid Mount Plate (001-4648DSH). Mount this assembly in an accessible location as close as possible (max distance 3ft) to the Spray Shield. This will ensure the most precise application of the preservative.

Pulsing Solenoids
002-2203F

Solenoid Harness
006-3650-S1

Solenoid Mount
001-4648DSH

B. Once solenoid bracket mounted, streamline solenoid harness 006-3650-S1 along baler back to connection on main baler harness 006-765B2 once installed. Ensure that the solenoid with <u>white dot</u> attaches to 'SOL 1' and solenoid with <u>blue dot</u> attaches to 'SOL 2' harness connection ports. Ensure wire routing does not interfere with any moving parts or hydraulic lines, securing harness as needed.

C. Route 1/2" hose along the path or similar, inside of the baler from the pump plate to the solenoid plate, as shown in picture above. Keep hoses away from moving parts and hydraulic hoses. When all hose connections are made to the tank, pump, solenoids, and spray shield secure with existing cable clamps or use cable ties.

D. Connect 1/4" reinforced hoses from Spray Shield to Solenoids. Note: Ensure solenoid with white dot connects to white hose/white spray shield dot. Hose with blue stripe connects to solenoid with blue dot.

Tip Connections

Dot Color	Tip	Hose Color	Position on 006-765B2
White Dot	8004 or 11004	White	Sol 1
Blue Dot	8008 or 11008	Blue Stripe	Sol 2

700 Solenoid Package for Large Square Balers

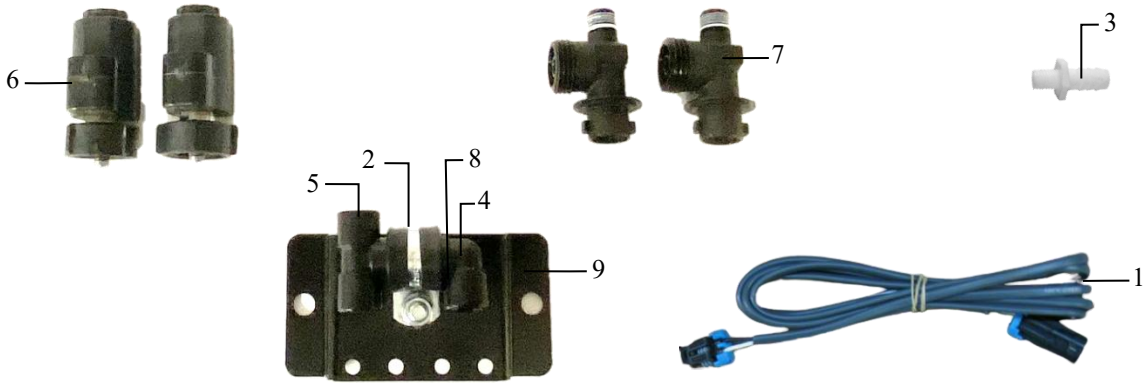

Ref	Description	Part #	Qty	Ref	Description	Part #	Qty
1	Solenoid Harness (5')	006-3650-S1	2	6	Solenoid	002-2203F	2
2	Hose Clamp #6	003-9003	1	7	Solenoid Valve Body	004-1207VF	2
3	1/4" x 1/2" Straight Fitting	003-A1412	1	8	1/4" Nipple	003-M14	1
4	1/4" Elbow	003-SE14F	1	9	Solenoid Holder	001-4648DSH	1
5	1/4" Tee Fitting	003-TT14SQ	1	NP	O-Ring Kit (Replacement)	002-2203FG	2
					Complete Assembly	SOL-3SP-LS	

Expanded View of Pulsing Solenoid (002-2203F)

Replacement Pulsing Solenoid O-Ring Kit available (002-2203FG)
(Includes EPDM O-Rings 6, 8, 9 shown below)

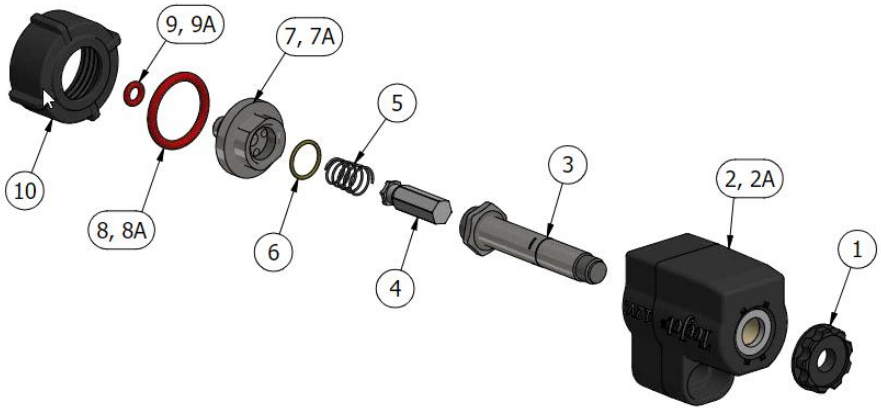

To clean solenoid valves:

The Center Section can be removed from Housing #2 by loosening #1 from #3. Once removed, use wrenches on components #3 and #7 and gently turn to loosen and separate. Soak parts #3-10 in warm soapy water, clean with a soft bristle brush, rinse with clean water to remove buildup before reassembly.

Main Wire Harness Routing and Connections

Route harness 006-765B2 along path shown above (or similar) either on top of or inside of the baler from the pump plate to the hitch of the baler. Note: the end of the harness that has the large plug with sockets and the white heat shrink label, will be at the hitch of the baler. The other end attaches to plug on pump plate. Keep harnesses away from moving parts and hydraulic hoses. Secure harness in suitable locations as needed.

Identification on plugs of Main Baler Harness 006-765B2

Sol 1 and Sol 2 Plugs attach to the solenoids with two 006-3650-S1 harnesses. Sol 1 attaches to the solenoid with a white dot. Sol 2 attaches to the solenoid with a blue dot.
EOR Plug (End of Row) is for the optional Crop Eye Forage Indicator kit. (474C)
CAN/IDM Plugs are for use with optional Moisture Dye Marking kit. (740DM), ISOBUS integration with compatible balers, future expansion, or CAN termination. Only one CAN/IDM port requires a connection for termination. Dye Marker or baler ISO integration harness has a port for terminator connection on them.
EOB Plug is for the (End of Bale) sensor that is attached by the needle arm.
Secure with existing cable clamps or use cable ties when all connections are made.

Control Modules and Wiring Harnesses

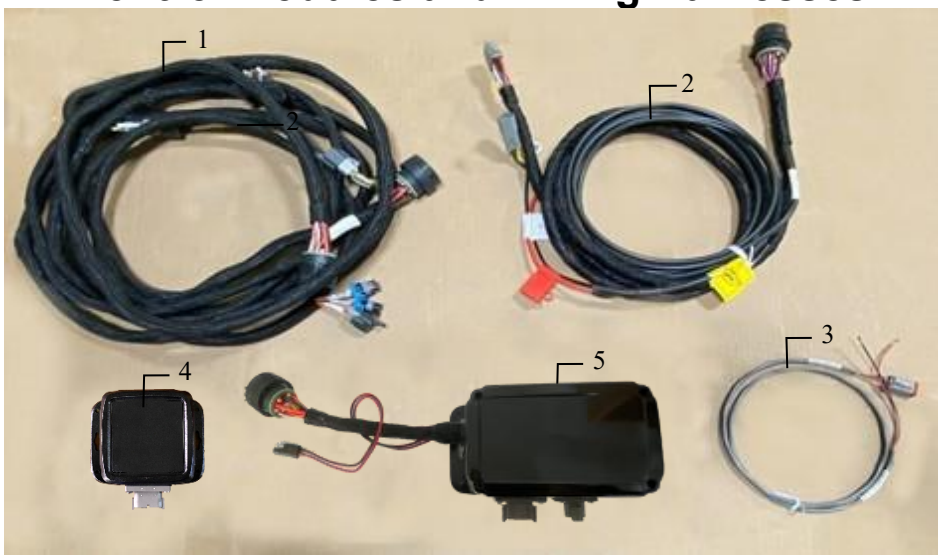

Ref	Description	Part#	Qty	Ref	Description	Part#	Qty
1	Power Lead Baler 35'	006-765B2	1	NP	Baler Integration Harness	006-765VA	1
2	Power Lead Tractor	006-765IC	1				
3	Key Switch Wire	006-765CPH	1	NP	Baler Integration Extension (Required only for pre-2012 Agco Balers)	006-6650VAX	1
4	ISO Pump Module (IPM)	006-7671LS	1	NP	Baler Integration Harness (Krone Balers Only)	006-765VAK	1
5	ISO Communication Module (ICM)	006-6673	1	NP	Baler Integration Harness (Krone Gen. 5 Balers Only)	006-765VAK2	1
NP	Dust Plug Kit	006-765DP	1				
NP	120 Ohm Resistor (For use as non-ISO integrated units)	006-700R		NP	USB-C to USB-A Comm.Cable (Optional use for tablet connection)	006-6672USBX	

Star Wheel Moisture Sensor Kit

1. Locate spacer plates (001-6707ES), both star wheel moisture sensors (030-4642U / UE), twine diverters (001-4644H / 4645H) and hardware parts bag.
2. The star wheels will be placed as close to the knotter as possible. Follow installation instructions for your specific baler model.
3. Install with four (two per side) 5/16” x 3-1/4” Allen buttonhead cap screws. Make sure the Allen heads are in the bale chamber side of the star wheel.
4. The star wheel with the 6-position plug will need to be placed on the right side of the baler along with the twine diverter with two extra holes. 030-4642UE Star Wheel must rotate in the indicated clockwise direction as the bale moves thru the bale chamber. Reference the rotation indicator sticker on star wheel block.
5. The star wheel with the 2-postion plug will need to be placed on the left, or ladder side of the baler.
6. Place a spacer plate between each star wheel block and the bale chamber with twine diverter on top.
7. Secure spacer plates, star wheels and twine diverters to baler with 5/16” hex nuts and lock washers. Hand tighten with wrench or ratchet- not to exceed 13 ft-lb torque. **DO NOT USE AN IMPACT TO TIGHTEN.** Over torquing star wheel mounting hardware can cause pre-mature wear of the star wheel blocks.
8. Connect moisture harness (006-7307EM2 or 006-7307EM3) to both star wheels.
9. Route Moisture Harness (006-7303EM2 or 006-7307EM3) along top of baler, to the pump module located on the tank saddle at the back of the baler.
10. Attach rectangle plug of moisture harness to bottom of ISO pump module (IPM).

The following pages contain detailed instructions for specific baler make and models:

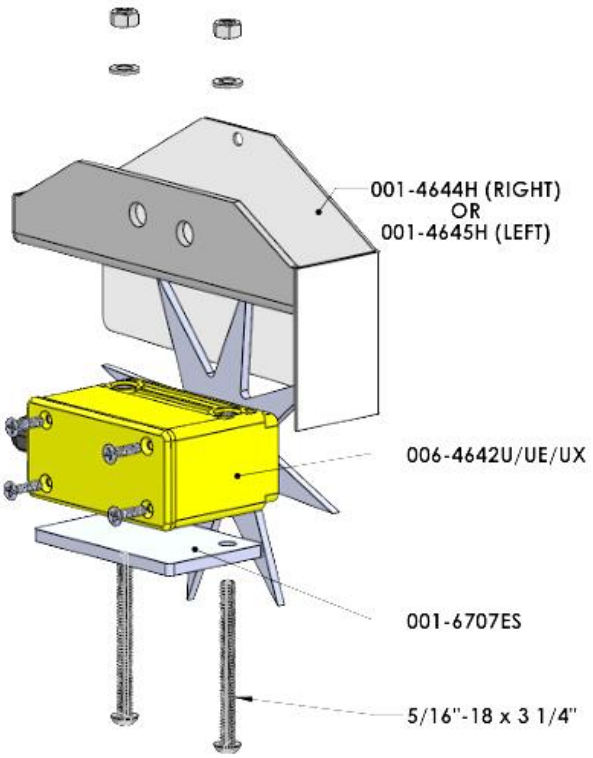

Star Wheel Sensors- 700 Series

For Large Square Balers – Reinforced Yellow Block 2026

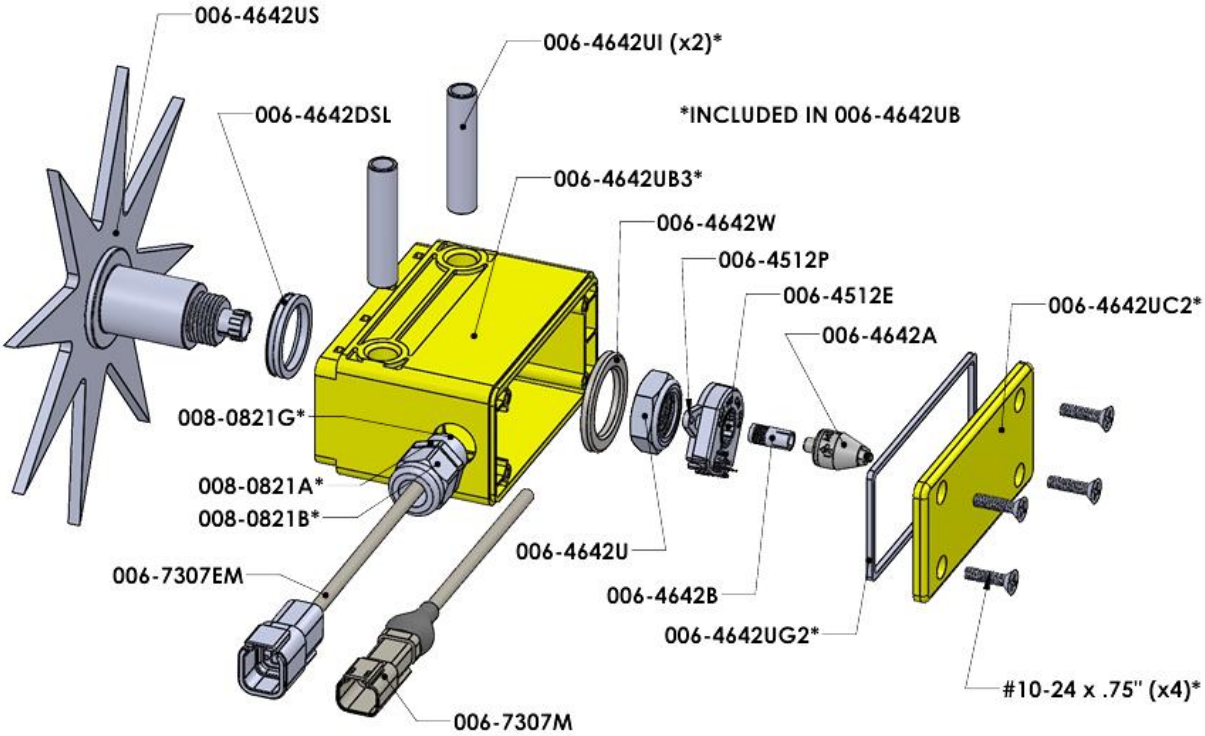

Description	Part#	Qty
Star Wheel (includes swivel insert)	006-4642US	1
Dust Seal Gasket	006-4642UG	1
Star Wheel Block Only	006-4642UB3	1
Star Wheel Block End Cap	006-4642UEC	1
Block Inserts	006-4642UI	2
Wire Compression Grommet	008-0821A	1
Grommet Locking Nut (internal)	008-0821B	1
Washer for Wire Grommet	008-0821G	1
Bearing Washer	006-4642W	1
Star Wheel Nut	006-4642U	1
Encoder Mount (030-4642UE only)	006-4512P	1
Encoder (030-4642UE only)	006-4512E	1
Swivel Insert	006-4642B	1
Swivel Insert	006-4642B	1
Electric Swivel	006-4642A	1
Electric Swivel	006-4642A	1
Star Wheel Block Gasket	006-4642UG2	1
Star Wheel Block Cover	006-4542UC2	1
Encoder Harness Plug (6 Pin) (030-4642UE only)	006-7307EM	1
Moisture Harness Plug (2 Pin) (030-4642U only)	006-7307M	1

Description	Part#	Qty
Star Wheel Spacer Plate (not pictured)	001-6707ES	1
Star Wheel Mounting Hardware (5/16" x 3-1/4" Allen Head Screws, nuts, locks and washers)		2
Twine Guard -Left	001-4645H	
Twine Guard -Right	001-4644H	
Star Wheel Drilling Template (optional)	001-4642T	
Replacement Star Wheel Block*	001-4642UB	
Complete Non-Encoder Star Wheel	**030-4642U**	
Complete Encoder Star Wheel	**030-4642UE**	
Moisture Harness- Standard (12' and 13' Section lengths)	006-7307EM2	
Moisture Harness- Long (16' and 18' section lengths)	006-7307EM3	
Complete Moisture Kit* -Standard	**MSH-LS-STD**	
Complete Moisture Kit*- Long	**MSH-LS-EXT**	

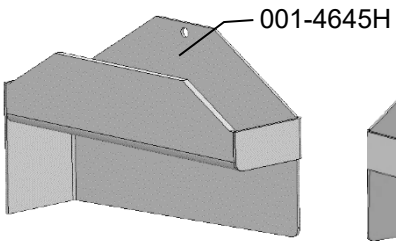

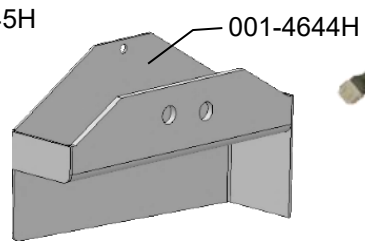

Complete Moisture Kits include encoder star wheel, non-encoder star wheel, left and right twine diverters and long or std. moisture harness.

Krone Large Square Balers – (MSH-LS-EXT)

Star Wheel Mounting (All non-HDP models) remove the bale for the bale chute. The star wheels are to be mounted on top of the baler, just behind the knotters and as far forward as possible. Use the table and diagram below to mark the two bolt hole locations on the bale chamber (D, E, F). Use the star wheel mounting template to mark the location of the notch to be cut. When cutting the notch both the vertical brace and the bale chamber will need to be cut.

Before cutting verify the notch measurement with the below diagram using marks A & B. After cutting the notch and drilling the holes, insert the 5/16” x 3-1/4” black Allen head bolts up through the chute. Place spacer plate and star wheel block over the bolts and install the twine guards. Secure with 5/16” lock washers and nuts. **The twine guard containing the two extra holes will be placed on the right side**. Ensure that the encoder star wheel turns in a clockwise rotation when bale is moving through the baler - reference rotation diagram sticker on star wheel.

For 2010 Krone HDP part number 20 073 194 0 must be ordered. This kit will include mounting instructions for the star wheels.

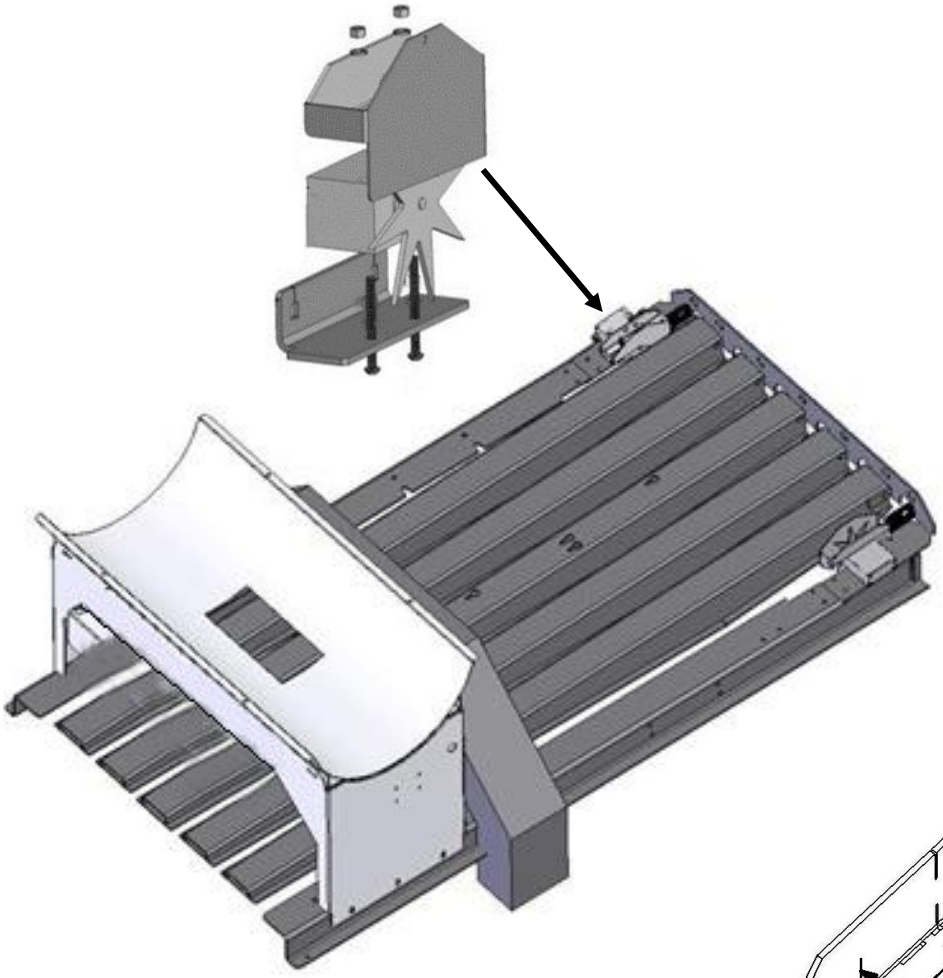

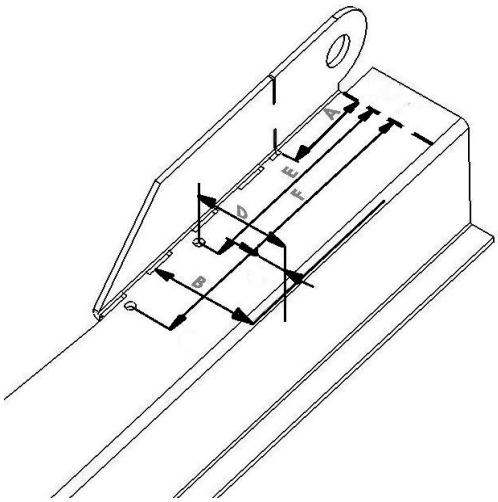

Krone balers 890 – 12130
A= 2-3/4” (69mm) from edge of notch
B= 3-1/2” (89mm)
D= 3” (76mm)
E= 5-3/4” (77mm) from edge of notch
F= 8-3/4” (22cm) from edge of notch

Star Wheel Installation Guide

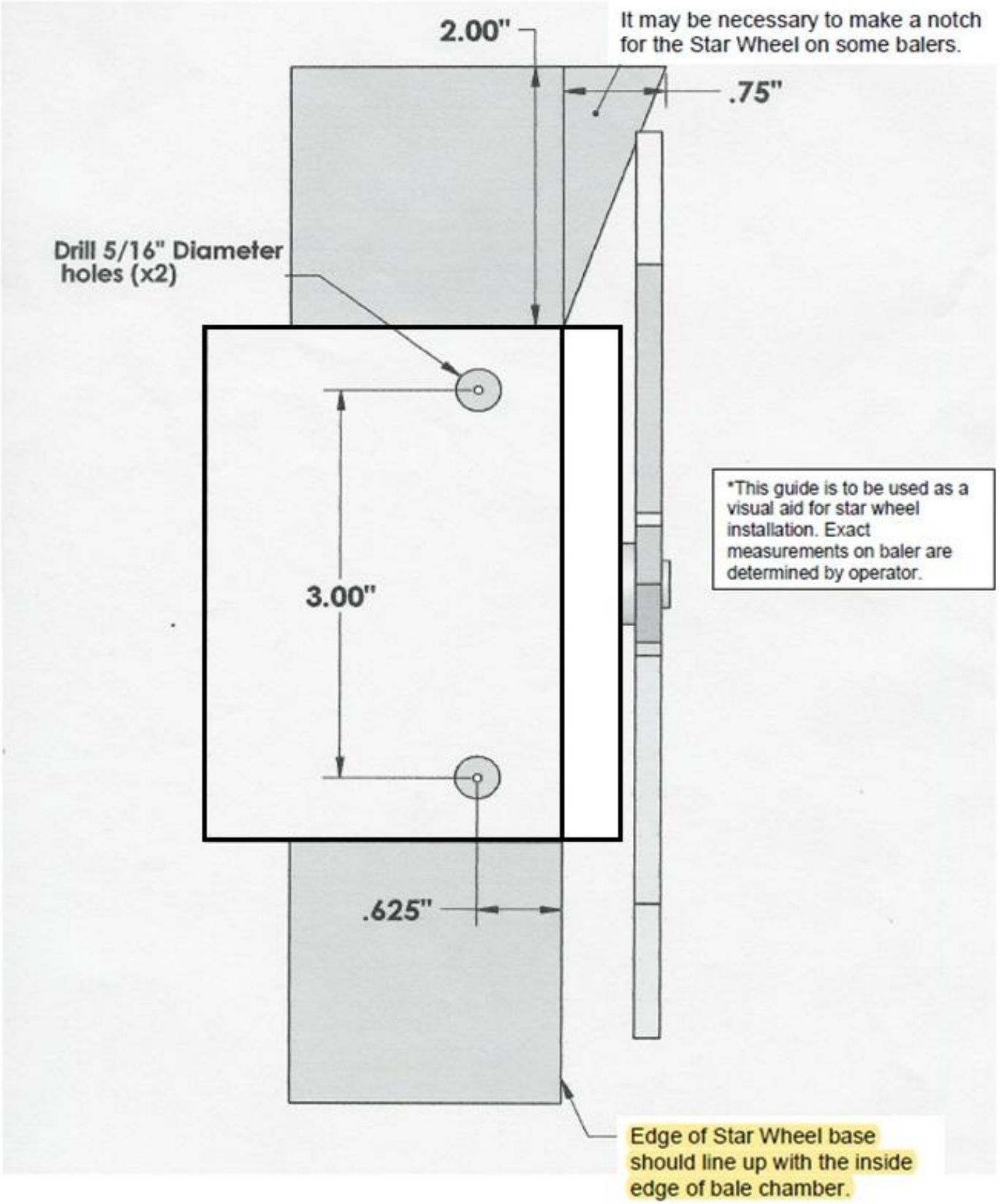

(this page left intentionally blank)

End of Bale Sensor (EOB)

The End of Bale sensor determines the position of the needles on the baler. When the needles cycle the sensor communicates this information to the controls. Installation of this sensor is required for use with the Harvest Tec job records. Reference “Sensor Settings” in Operation Manual. Follow the steps below for your baler to mount the sensor.

End of Bale Sensor

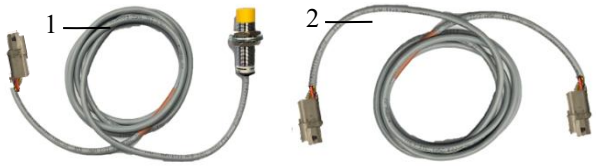

Ref	Description	Part #	Qty
1	End of Bale Sensor	006-7401	1
2	End of Bale Ext.	006-7401EXT	1

Installation for Krone 890 – 1290 Balers

The Krone end bale mount bracket 001-4648K is used for most Krone balers and will be found in the installation kit box.

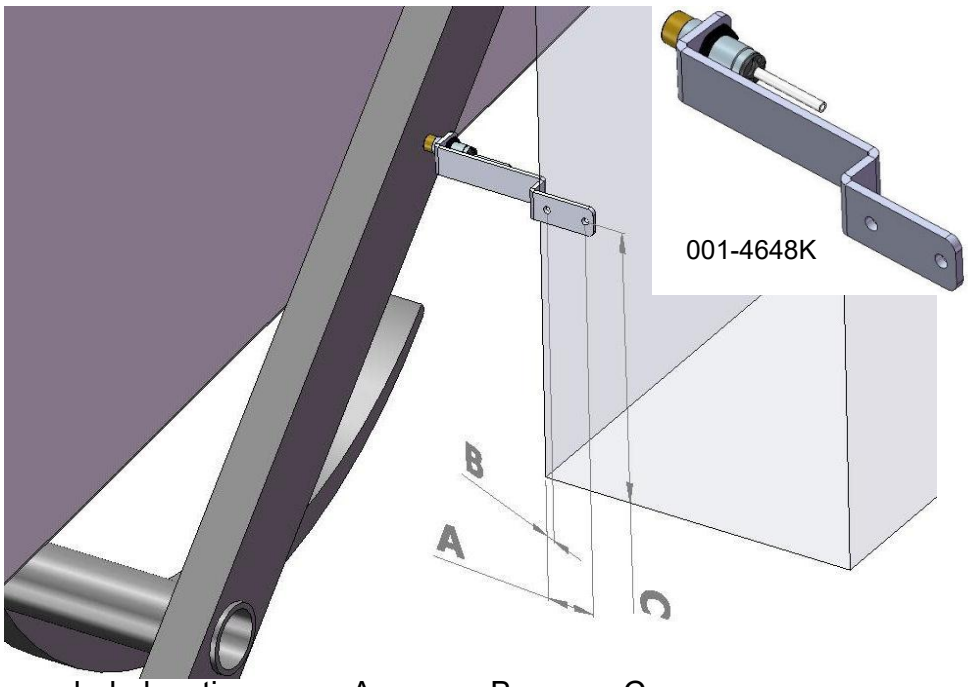

Sensor hole location	A	B	C
N/A	2-1/4” (65mm)	1/2” (13mm)	8” (20cm)

Mount the Krone end of bale sensor bracket (001-4648K) as shown for stationary twine boxes. The Krone mounting bracket can be found in the installation kit box. Mark and drill two 3/8” (10mm) holes and attach the bracket using two 5/16” x 1” self-tapping screws, and 5/16” flange nuts. Mount the sensor at the end of the bracket, keep the sensor 1/4” (7mm) from the needle and tighten both nuts. Run the sensor cable up to the main harness (006-765B2) and attach to port labeled EOB.

For non-stationary twine boxes, mount the EOB sensor on a stationary baler component that is clear of any moving parts. The EOB sensor should be placed and mounted for the main needle arm for multi-bale balers.

Installation - Krone 12130 Balers

Krone end of bale sensor bracket (001-4648K2) be used. This bracket will be found in the installation kit box.

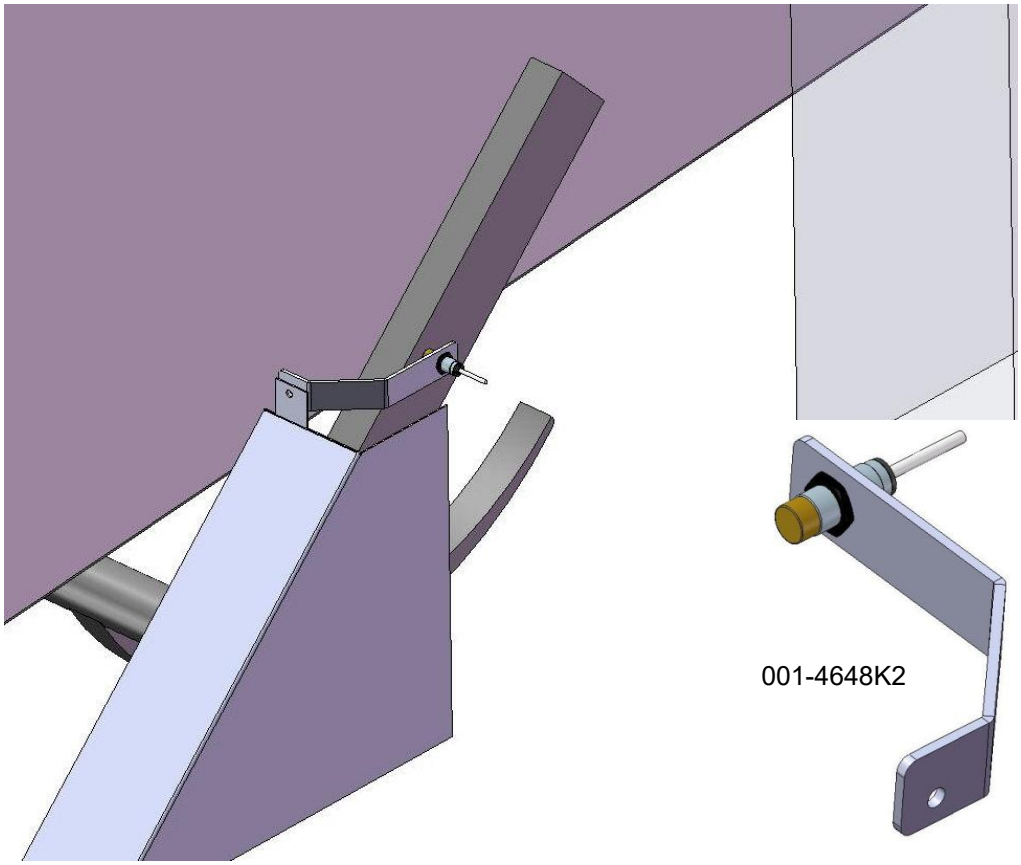

Mount the Krone end of bale sensor bracket (001-4648K2) as shown. The Krone mounting bracket can be found in the installation kit box. Directly behind the twine box on the right side of the baler remove the bolt and nut that secures the fiberglass baler shield to the baler. Mount the sensor bracket using the 3/8 x 1 bolt, lock and nut. Mount the sensor at the end of the bracket, keep the sensor 1/4” (7mm) from the needle and tighten both nuts. Run the sensor cable up to the main harness (006-765B2) and attach to port labeled EOB.

Tractor Setup

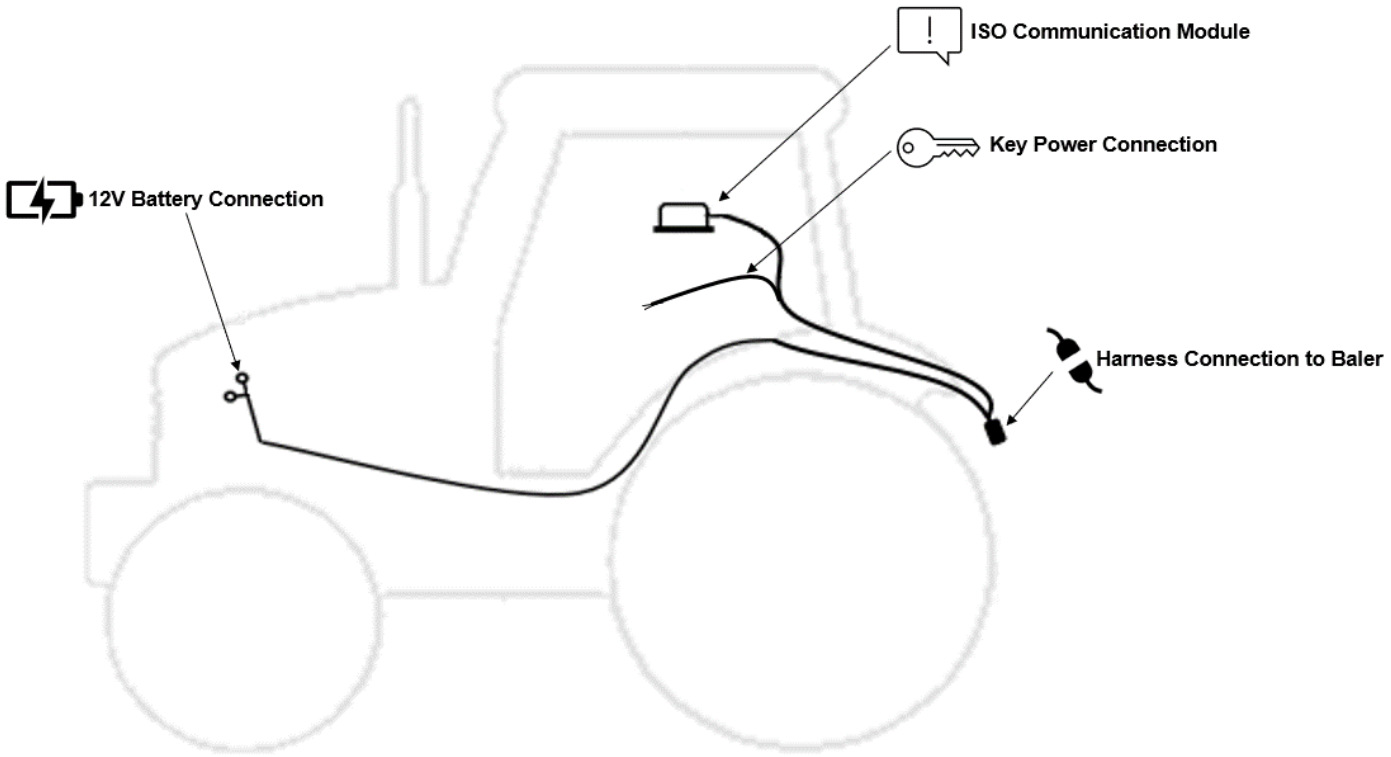

The general tractor setup of the 700 Series applicator can be seen above. The main harness of interest is the tractor power/communication harness (006-765IC). This harness will connect at the tractor battery, to the ISO Communication Module (ICM) mounted in the cab, a keyed power connection point, and connect at the hitch area to the baler power/communication harness (006-765B2). View below to see highlighted installation instruction:

12V Battery Connection

The 12V battery connection must be at the tractor battery. Connection to alternative locations such as an accessory port can cause problems with applicator system.
MUST BE CONNECTED DIRECT TO TRACTOR BATTERY TERMINALS

ISO Communication Module

The ISO communication module is to be mounted inside the cab. Other mounting locations can lead to issues with weathering and operation. Once installed and the system is powered, a green light will turn on with the ICM module.

Key Power Connection

Ensure a solid keyed connection is found inside the cab and wired into. Poor keyed power connection can result in applicator system issues.

Harness Connection to Baler

The tractor harness connects at the hitch to baler power/communication harness (006-765B2). This will allow the system components to communicate with one another. Ensure connections are debris and corrosion free.

Display Options

Optional Harvest Tec Display

The 700 series Harvest Tec Display will allow you to set your real time baling parameters to ensure the most precise application to every bale. This is done by utilizing the improved touch technology to select objects, enter data, and swipe through operational screens.

The Harvest Tec Display offers easy integration by connecting to the additional CAN plug on the 006-765IC harness. Once, connected the Harvest Tec display will power up with applicator system.

Note: The Harvest Tec Display must be used as a standalone display, the baler cannot run both integrated and on the Harvest Tec Display. Must be one or the other. Removal of the 006-765VA or integration harness is required when equipped.

Optional Tablet Display

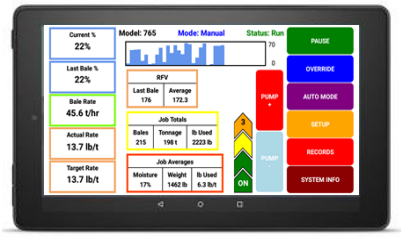

The iOS or Android Tablet displays offer the ability to communicate with the 700 series applicator system via hard-wired connection to the ISO Communication Module (ICM). Through the free Precision Baling App, the operator can set real time baling parameters to ensure the most precise application to every bale.

This provides a multi-use option while utilizing the improved app to select objects, enter data, and easily switch through operational screens. The Tablet Display offers easy integration by connecting a charging cable to the USB port on the ICM module. Once connected the Harvest Tec applicator will display upon opening the app and powering up the applicator system. Tablets can be used in addition to integrated baler VT display.

***Made for iPad®**
Required to be running the most current operating system or one version previous.
*iPad is a trademark of Apple Inc., registered in the U.S. and other countries.

Optional Harvest Tec Display Kit (030-7670DK)

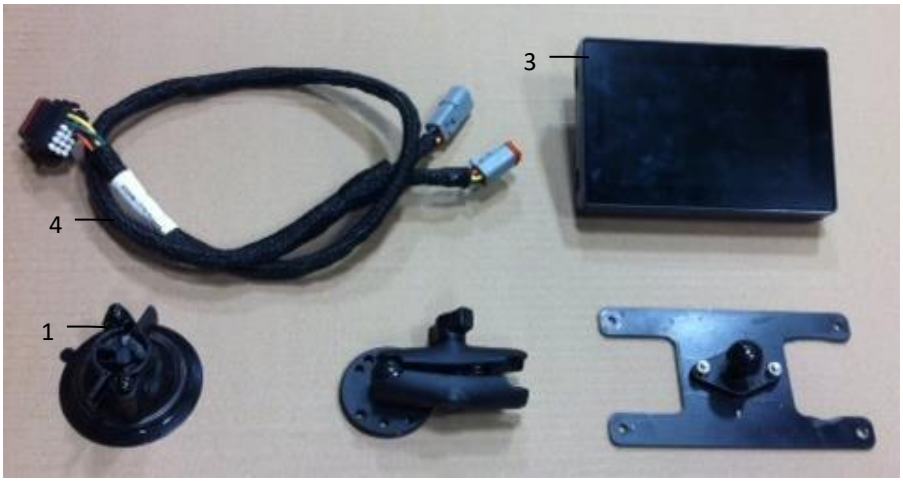

Ref	Description	Part #	Qty
1	Suction Cup Mount	001-2012SCM	1
2	Ram Mount	001-2012H	1
3	Harvest Tec Display	006-765GVT	1
4	Display Harness	006-765GH	1
5	Mounting Plate	001-700GH	1
NP	700 Series Resistor	006-700R	1

Complete HT Display Kit 030-7670DK

Installation Instructions

1. Connect 006-765GH harness connection to 006-765IC tractor harness key power plug.
2. Connect 006-765GH harness to the Harvest Tec VT Display before tightening mount in place.
3. Tighten the mounting and display. Streamline harness as necessary.
4. Once connected, power cycle the system and ensure display is working properly.

NOTE: CANNOT OPERATE APPLICATOR SYSTEM WITH HARVEST TEC DISPLAY AND BALER ISO INTEGRATION or TABLET/ iPad AT THE SAME TIME.

Optional Android Display Kit (030-1670DK)

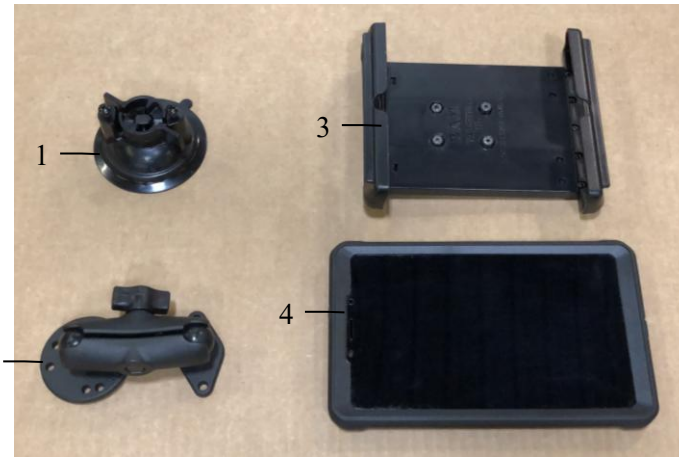

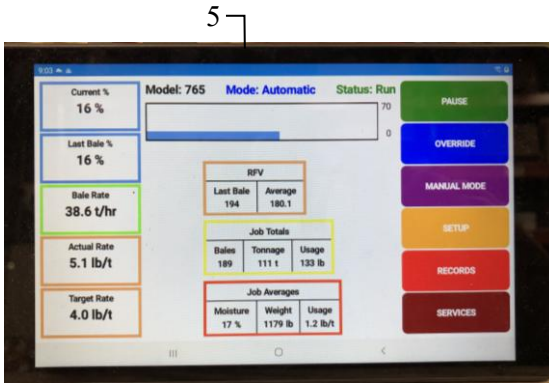

Ref	Description	Part #	Qty
1	Suction Cup Mount	001-2012SCM	1
2	Ram Mount	001-2012H	1
3	Spring Load Cradle	001-2012SLC	1
4	Android Case	001-2012A1	1
5	Android Tablet	006-1670AT	1
NP	USB-C to USB-A Cable	006-6672USBX	1

Complete Android Tablet Display Kit — 030-1670DK

Note: Use a quality communication cable ending with a USB-A connection to connect tablet to (006-765ICM) control module - plug into the USB port showing a tablet.

Optional iPad Display Kit (030-6670DK)

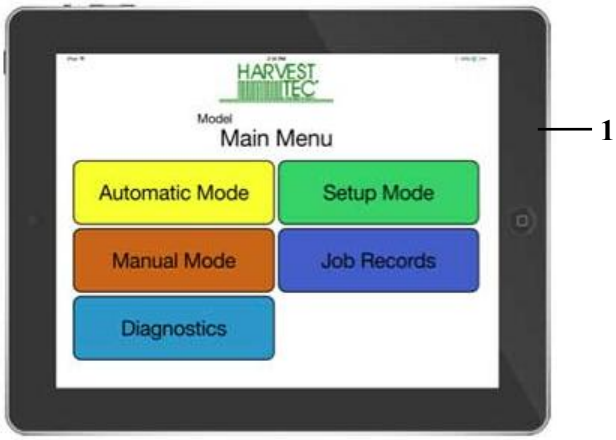

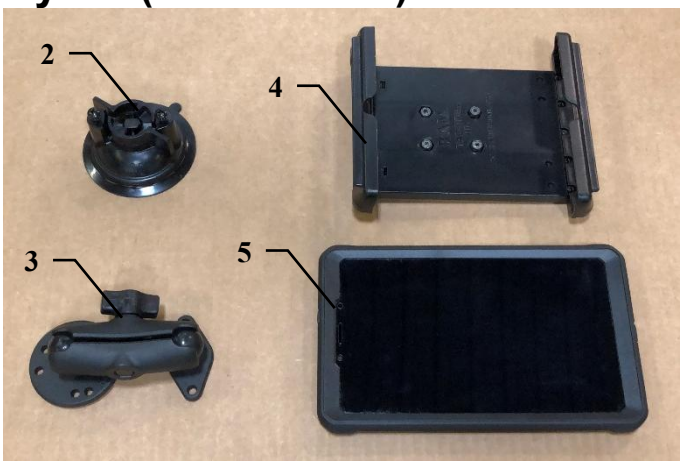

Ref	Description	Part #	Qty
1	iPad Mini 6	006-6670IP	1
2	Suction Cup Mount	001-2012SCM	1
3	Ram Mount	001-2012H	1
4	Spring Load Cradle	001-2012SLC	1
5	iPad Mini 6 Case	001-2012C6	1
NP	Power/Comm. Cable	006-6672USBX	1

Complete iPad Mini Display Kit — **030-6670DK**

iPad mini is a trademark of Apple Inc., registered in the U.S. and other countries

Optional ISO Display Adapter Harness (006-7670A or 006-7670F)
For use with a dedicated ISO display

The 700 Series Applicator has the option to tie into compatible dedicated ISO monitors by utilizing the diagnostic port. When connected, the Harvest Tec System will populate as its own object pool within the ISO display. When this object pool is selected, the ISO monitor will then function as a dedicated monitor for the Harvest Tec System.

The Harvest Tec System will function as a stand-alone system when using this adapter.
System will not integrate with the baler ISO system software when using this adapter.

Any tablet connected to the ICM module must be disconnected from the ICM before the Harvest Tec Object Pool screen will activate within the ISO display.
To connect Adapter Harness (006-7670A or 006-7670F), unplug the 4-pin Key Power Plug (006-765CPH) connection from the Tractor Harness (006-765IC) and replace with the plug from the Adapter Harness. Connect the round plug end of the Adapter Harness to the Tractor ISO Display Diagnostic port.

Scan the QR code to view a short video of the
Adapter Harness for ISO Display:

For additional product and service information:
See our YouTube Channel https://www.youtube.com/@harvesttec

ISO Diagnostic Port Adapter (006-7670A)

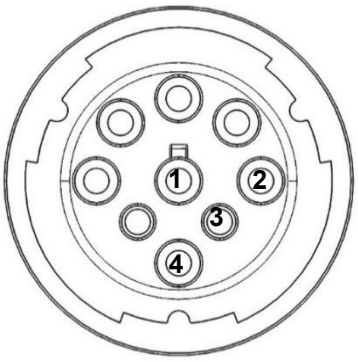

006-7670A connecting plug and pin out

Pin 1	Black	Ground
Pin 2	Yellow	CAN High
Pin 3	Green	CAN Low
Pin 4	Red	12V+ Key Power

ISO Diagnostic Port Adapter (006-7670F)
For Newer Fendt and MF Tractors with plug location in the cab ceiling

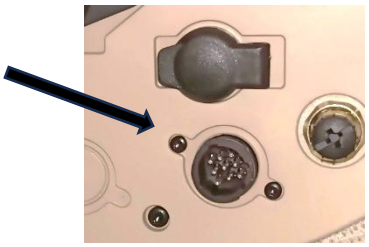

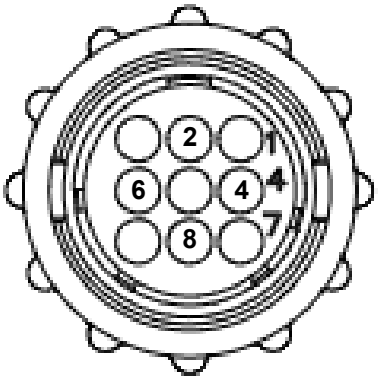

006-7670F connecting plug and pin out

Pin 8	Black	Ground
Pin 4	Yellow	CAN High
Pin 2	Green	CAN Low
Pin 6	Red	12V+ Key Power

Krone Baler ISO Integration

The 700 Series applicator can display on a split-screen ISO terminal, the CCI1200, offered with new Krone balers. The moisture can also be shown on the baler's operating screen but the split-screen setup is the recommended option from Harvest Tec for the monitoring of all critical system functions such as moisture, application and bale information.

Capable Balers

All 2018 and newer Krone balers (starting with SN 976909). If unsure, balers with a software version structured similar as seen to the right will be capable.

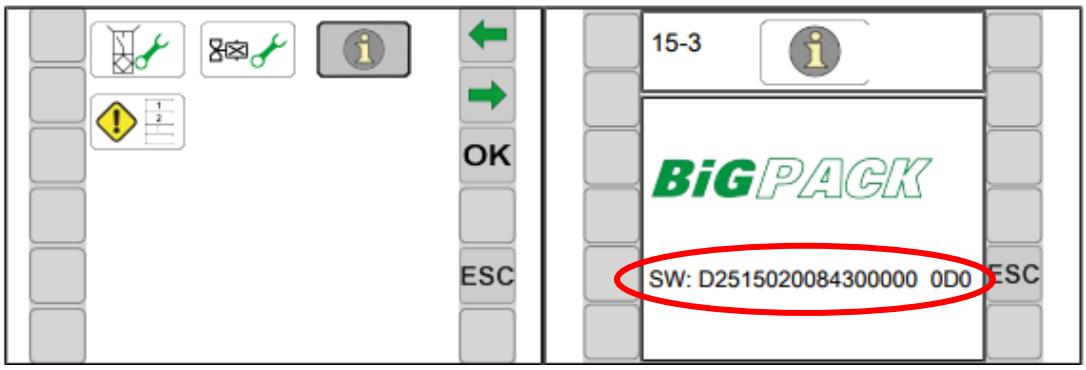

Software version example on new baler ECU

Gen 5 Balers

With 006-765VAK2 Baler Integration Harness

The following are required to integrate with the baler and display on the CCI1200 in split screen mode:
- Integration Harness – 006-765VAK2
- ICM Version 126, or later & OP version 70230, or later

Locate the baler ECU. Disconnect the 6 pin Deutsch connector shown in the picture circled in red. Attach baler integration harness 006-765VAK2 into the ECU wire harness. Route the integration harness to the right side of the baler and locate the 4- Pin Deutsch CAN port (located 48 inches behind the breakout connector for the EOR/solenoids) on the 700 Series Baler Harness (006-765B2). Remove the protective cap from the CAN port and connect the integration harness.

Display Setup After the integration harness is connected and the system is powered on, you should see a status bar as the ISO display loads the Harvest Tec display information. After loading, the Harvest Tec operation screen will be visible on the terminal. (as pictured below). For information on how to configure the CCI1200, please reference the manufacturer's operation manual.

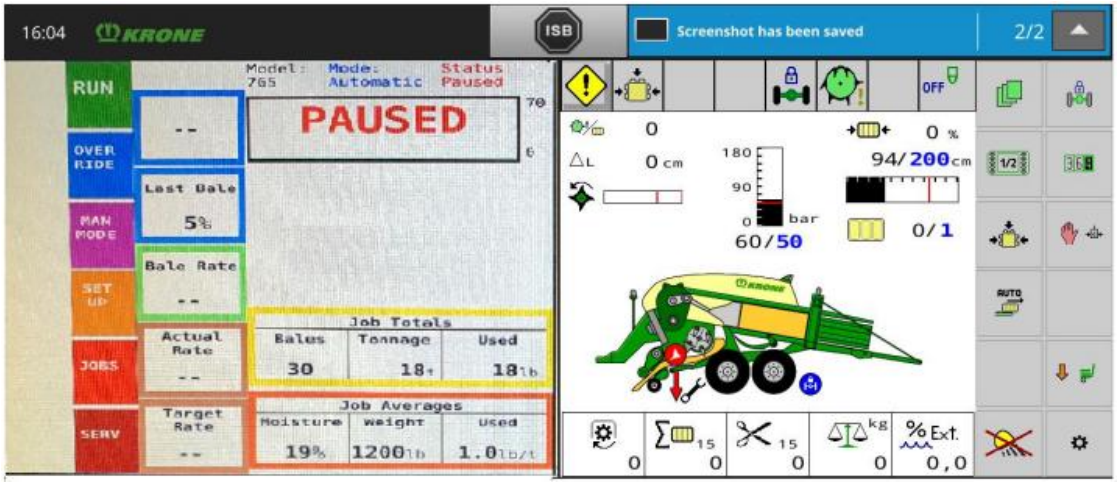

For Non- Gen 5 Balers

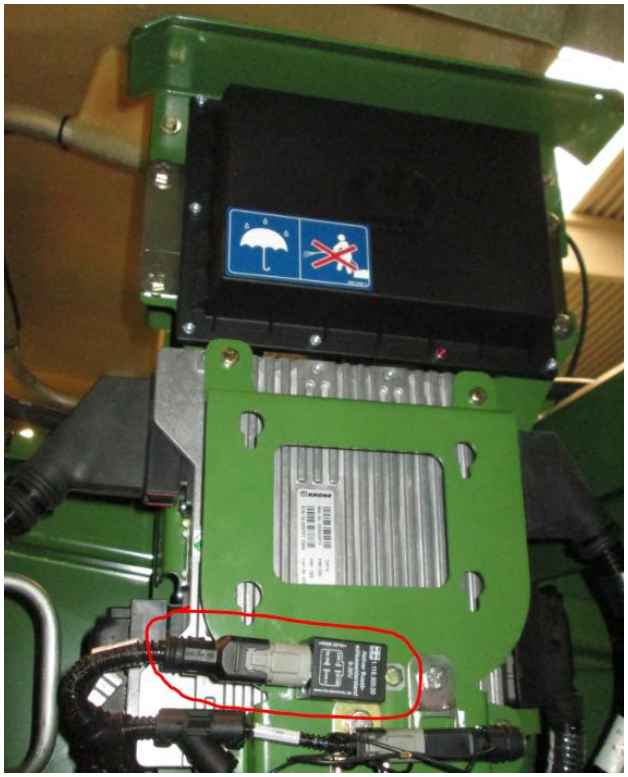

- If the above information is confirmed, the following are required to integrate with the baler and display on the CCCI1200 in split screen mode:
    - Integration Harness – 006-765VAK
    - ICM Version 126 or later & OP Version 70230 or later

Locate the baler ECU on the front left corner of the baler. Disconnect the 4 pin Deutsch connector at X100.2 (shown circled in picture on right) where it connects to the terminator. Install the split end of the integration harness in between X100.2 and the terminator. Route the integration harness to the right side of the baler and locate the 4-Pin Deutsch CAN port (located 48 inches behind the breakout connectors for the EOR/solenoids) on the 700 Series Baler Harness (006-765B2). Remove the protective cap from the CAN port and connect the integration harness.

Display Setup

The preservative system will display as a separate implement. It is not available as the split screen view at this time.

Wiring Diagram – 700 Series

1. Connect the power harness (006-765IC) to the tractor battery (12 volt) using the red wire with fuse to the positive side and the black wire to the negative.
   A. **The power harness must be connected to the battery!**
      CONTACT HARVEST TEC BEFORE MODIFICATIONS.
      The unit will draw more amps than convenience outlets can handle. Any modifications of the power harness will void systems warranty
   B. **This unit will not function on positive ground tractors.**
   C. **If the unit loses power while operating it will not keep track of accumulated pounds of product used.**
2. The power harness on the tractor (006-765IC) will run from the tractor battery to the hitch. The power harness on the baler (006-765B2) will connect to the tractor power harness (006-765IC) at the hitch.
3. Connect the keyed power wire (006-765CPH) to a keyed power source on the tractor.
   The keyed power wire must connect to a keyed source or the unit will not power up correctly.
4. Attached the ISO Communication Module (006-6673) to the tractor power harness (006-765IC).
5. Attach the End of Bale (EOB) connection on baler harness (006-765B2) to the EOB Sensor (006-7401).
6. Attach the Solenoids (SOL 1 & 2) connections on the baler harness (006-765B2) and to the solenoids (002-2203F).
7. Attach the Flowmeter (006-4724A) to the Pump Module connection on pump plate assembly.
8. Attach the rubber molded connector on pump plate to the Pump (007-4120DE).
9. Attach star wheel (030-442U/UE) connection to the pump module
10. Connect either 006-700R terminator OR 006-765VAK integration harness (specific Krone balers only)

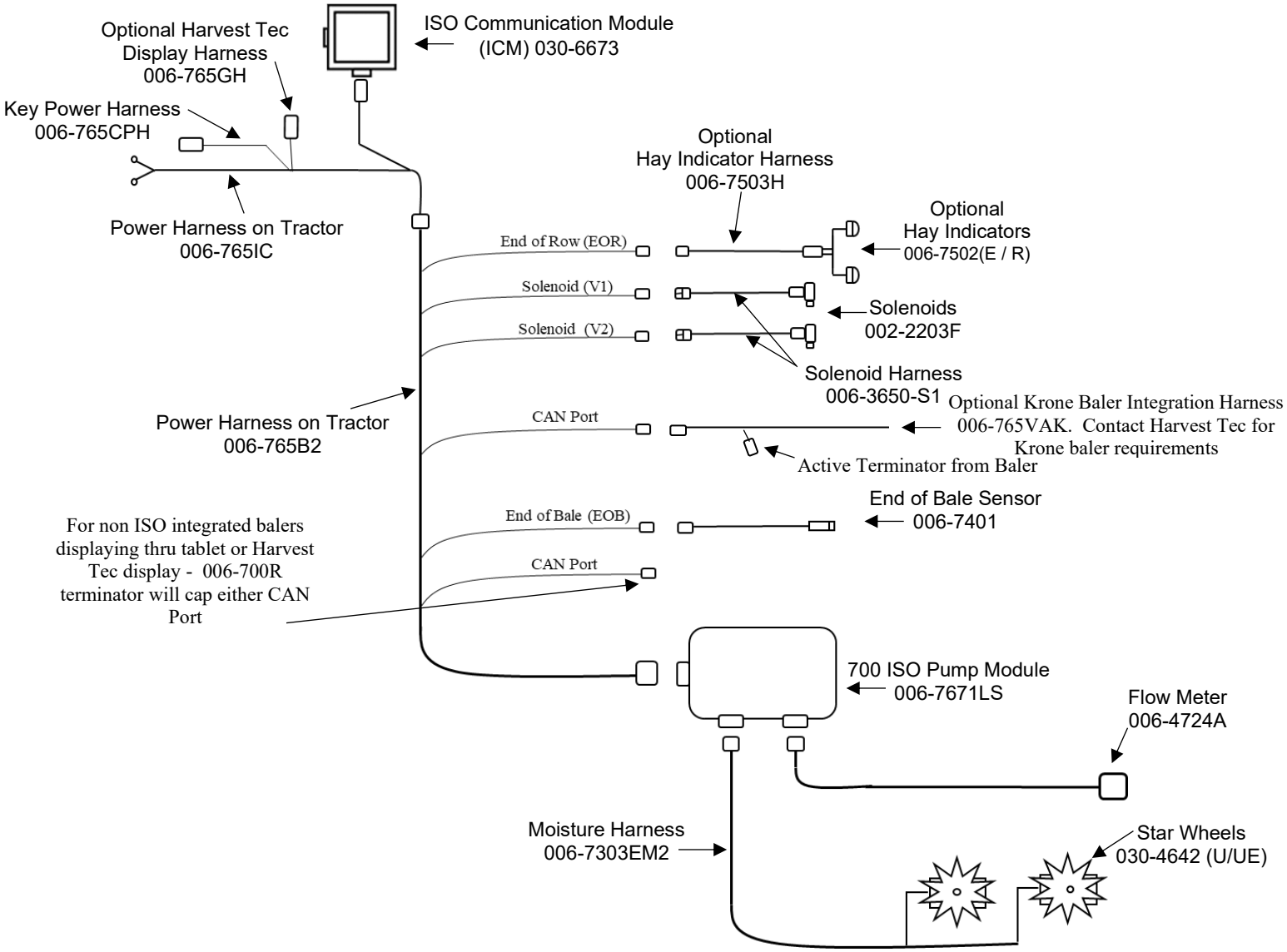

Pin Outs

Integrated Control Module (ICM) on Tractor Harness 006-765IC

(Deutsch Plug Number: DTM06-12SA)

Pin 1	Red	+12V from ECU
Pin 2	Purple	Signal Wire
Pin 3	Red/White	+12V CAN X
Pin 4	Black/White	Ground CAN X
Pin 5	Orange	CAN X Hi
Pin 6	Blue	CAN X Lo
Pin 7	Green	ISO CAN Lo
Pin 8	Yellow	ISO CAN Hi
Pin 9	White	GPS Expansion 1
Pin 10	Gray	GPS Expansion 2
Pin 11	Brown	GPS Expansion 3
Pin 12	Black	Ground from ECU

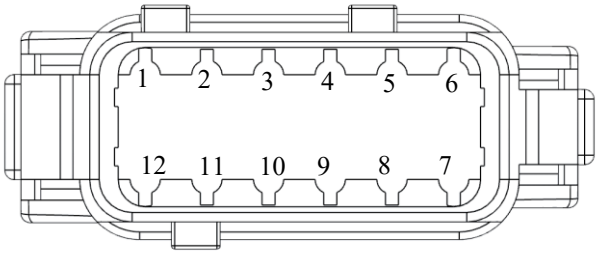

ISOBUS Plug on Tractor Harness 006-765IC

(Deutsch Plug Number: DT04-4P)

Pin 1	Red	+12V from ECU
Pin 2	Yellow	ISO CAN Hi
Pin 3	Green	ISO CAN Lo
Pin 4	Black	Ground from ECU

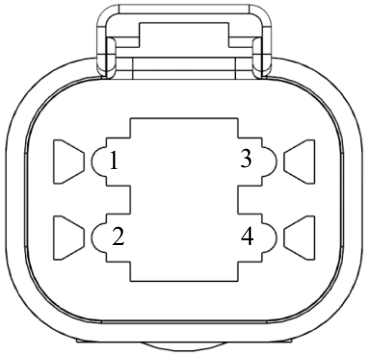

Power / Communication Tractor Harness 006-765IC at Baler Hitch

(Deutsch Plug Number: HDP24-24-18PN)

Pin 1	Not Used	----
Pin 2	Yellow	ISO CAN Hi
Pin 3	Green	ISO CAN Lo
Pin 4	Red	+12V Power to ECU
Pin 5	Black	Ground to ECU
Pin 6	Red	+12V From Battery
Pin 7	Not Used	----
Pin 8	Black	Ground From Battery
Pin 9	Not Used	----
Pin 10	Purple	Signal Wire
Pin 11	Red/White	+12V CAN X
Pin 12	Black/White	Ground CAN X
Pin 13	Orange	CAN X Hi
Pin 14	Blue	CAN X Lo
Pin 15	White	GPS Expansion 1
Pin 16	Gray	GPS Expansion 2
Pin 17	Brown	GPS Expainsion 3
Pin 18	Not Used	----

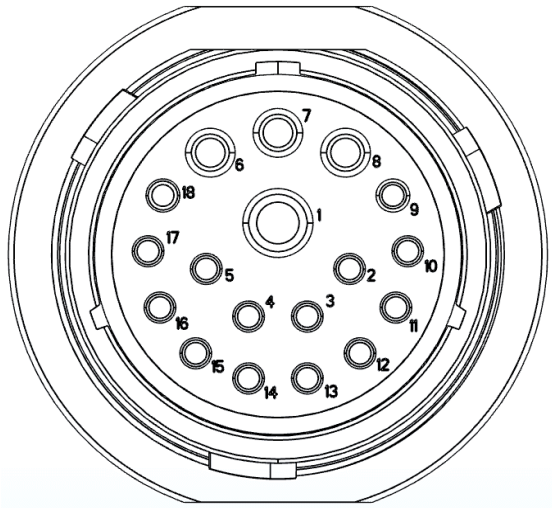

Pin Outs (continued)

Power / Communication Baler Harness 006-765B2 at Baler Hitch IPM
(Deutsch Plug Number: HDP26-24-18SN)

Pin 1	Not Used	----
Pin 2	Yellow	ISO CAN Hi
Pin 3	Green	ISO CAN Lo
Pin 4	Red	+12V Power to ECU
Pin 5	Black	Ground to ECU
Pin 6	Red	+12V From Battery
Pin 7	Not Used	----
Pin 8	Black	Ground From Battery
Pin 9	Not Used	----
Pin 10	Not Used	----
Pin 11	Not Used	----
Pin 12	Not Used	----
Pin 13	Not Used	----
Pin 14	Not Used	----
Pin 15	Not Used	----
Pin 16	Not Used	----
Pin 17	Not Used	----
Pin 18	Not Used	----

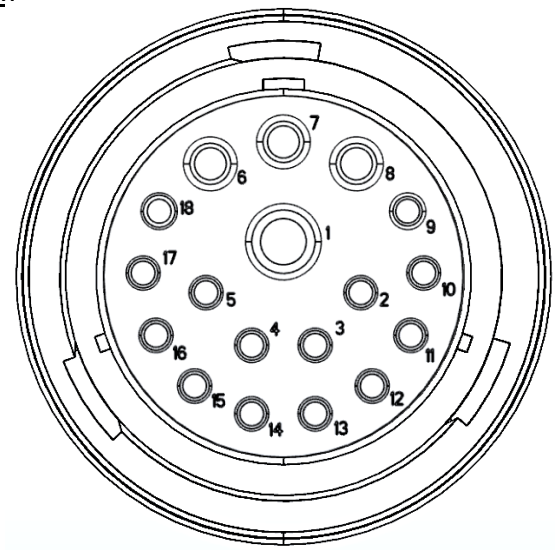

Power / Communication Baler Harness 006-765B2 at IPM Module
(Deutsch Plug Number: HDP24-24-18SN)

Pin 1	Not Used	----
Pin 2	Yellow	ISO CAN Hi
Pin 3	Green	ISO CAN Lo
Pin 4	Red	+12V Power to ECU
Pin 5	Black	Ground to ECU
Pin 6	Red	+12V From Battery
Pin 7	Not Used	----
Pin 8	Black	Ground From Battery
Pin 9	Not Used	----
Pin 10	Orange/White	+12V Power to EOR
Pin 11	Orange/Black	Ground to EOR
Pin 12	Purple/Green	EOR Signal
Pin 13	Blue/White	EOB Signal
Pin 14	Gray/Red	+12V Power to Solenoid 1
Pin 15	White/Black	Ground to Solenoid 1
Pin 16	Orange/Red	+12V Power to Solenoid 2
Pin 17	White/Black	Ground to Solenoid 2
Pin 18	Not Used	----

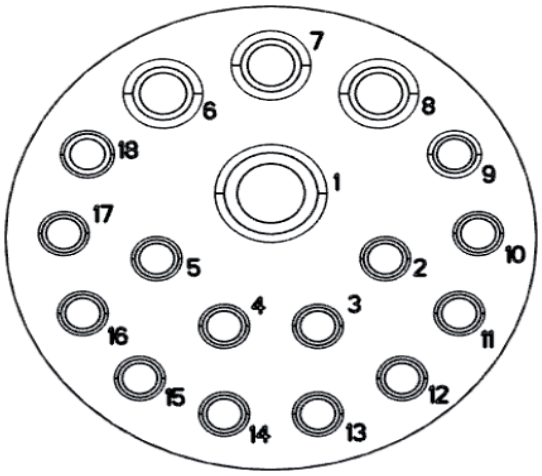

*IPM Module Whip Plug- Pin # 5 Not Used

Solenoid 1 Plug on Baler Harness 006-765B2
(Deutsch Plug Number: APTIV 12052641)

Pin B	Gray/Red	+12V to Solenoid 1
Pin A	White/Black	Ground to Solenoid 1

Solenoid 2 Plug on Baler Harness 006-765B2
(Deutsch Plug Number: APTIV 12052641)

Pin B	Orange/Red	+12V to Solenoid 2
Pin A	White/Black	Ground to Solenoid 2

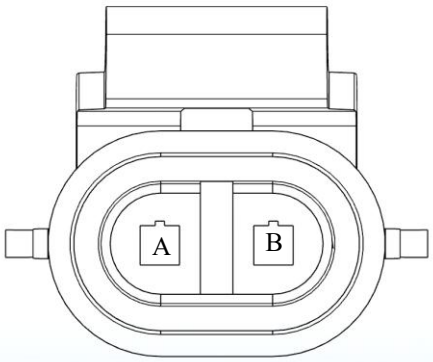

Pin Outs (continued)

CAN / IDM on Baler Harness 006-765B2
(Deutsch Plug Number: DT06-4S)

Pin 1	Red	+12V to Solenoid 2
Pin 2	Yellow	ISO CAN Hi
Pin 3	Green	ISO CAN Lo
Pin 4	Black	Ground to Solenoid 2

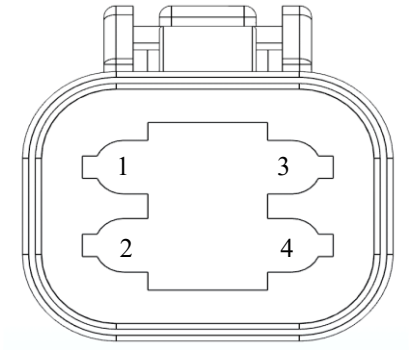

End of Bale Sensor Plug on Baler Harness 006-765B2
(Deutsch Plug Number: DT06-3S)

Pin 1	Orange/White	+12V to End of Bale Sensors
Pin 2	Orange/Black	Ground to End of Bale Sensors
Pin 3	Blue/White	Signal

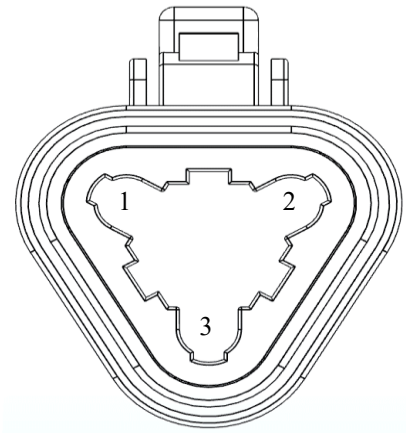

End of Row Sensors Plug on Baler Harness 006-765B2
(Deutsch Plug Number: DT06-3S)

Pin 1	Orange/White	+12V to End of Bale Sensors
Pin 2	Orange/Black	Ground to End of Bale Sensors
Pin 3	Blue/White	Signal

Integration Harness Plug on Baler Harness 006-765B2
(Plug: APTIV 12052848)

Pin A	Not Used	----
Pin B	Red	+12V Power
Pin C	Not Used	----
Pin D	Gray	Ground
Pin E	Orange	CAN Hi
Pin F	Blue	CAN Lo

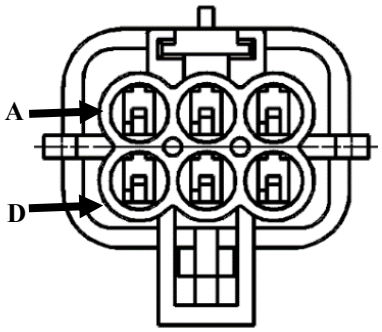

Pump Connection on 700 Controller Harness
(16 AWG Two-Wire Plug)

Pin 1	Red	Power to Pump
Pin 2	Black	Ground to Pump

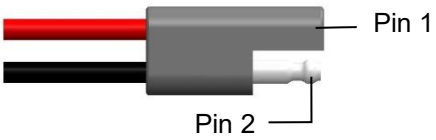

Harvest Tec LLC. Warranty and Liability Agreement

Harvest Tec, LLC. will repair or replace components that are found to be defective within 12 months from the date of manufacture. Under no circumstances does this warranty cover any components which in the opinion of Harvest Tec, LLC. have been subjected to negligent use, misuse, alteration, accident, or if repairs have been made with parts other than those manufactured and obtainable from Harvest Tec, LLC.

Our obligation under this warranty is limited to repairing or replacing free of charge to the original purchaser any part that in our judgment shows evidence of defective or improper workmanship, provided the part is returned to Harvest Tec, LLC. within 30 days of the failure. If it is determined that a non-Harvest Tec manufactured product has been used inside the Harvest Tec applicator system where the failure occurred, then Harvest Tec reserves the right to deny the warranty request at their discretion. Parts must be returned through the selling dealer and distributor, transportation charges prepaid.

This warranty shall not be interpreted to render Harvest Tec, LLC. liable for injury or damages of any kind, direct, consequential, or contingent, to persons or property. Furthermore, this warranty does not extend to loss of crop, losses caused by delays or any expense prospective profits or for any other reason. Harvest Tec, LLC. shall not be liable for any recovery greater in amount than the cost or repair of defects in workmanship.

There are no warranties, either expressed or implied, of merchantability or fitness for particular purpose intended or fitness for any other reason. This warranty cannot guarantee that existing conditions beyond the control of Harvest Tec, LLC. will not affect our ability to obtain materials or manufacture necessary replacement parts.

Harvest Tec, LLC. reserves the right to make design changes, improve design, or change specifications, at any time without any contingent obligation to purchasers of machines and parts previously sold.

Revised 1/24

HARVEST TEC, LLC.
P.O. BOX 63
2821 HARVEY STREET
HUDSON, WI 54016 USA
PHONE: 715-386-9100
FAX: 715-381-1792
Email: info@harvesttec.com