Installation Manual

Model 796J

110 Gallon Preservative Applicator for John Deere Large Square Balers

HarvestTec®

EST. 1976

796J-26-INST
9/26

Table of Contents

	Page
Introduction	**3**
System Overview	**4**
Tank Saddle Kit	**5-6**
Pump Plate Assembly	**7-8**
Drain/Fill Line	**9-10**
Parts Bags and Hoses	10
Spray Shield Assembly	**11**
Solenoids and Hose Routing	**12-13**
Solenoid Breakdown	13
Main Wire Harness – Routing and Connections	**14-15**
Star Wheel Moisture Sensors	**16-18**
Star Wheel Breakdown	17
End of Bale Sensor	**19**
Tractor Setup	**20**
Display Options	**21**
Optional HT Display Kit	22
Optional Android Tablet Display Kit	23
Optional iPad Display Kit	23
Optional ISO Display Adapter Plug	24
Optional Baler VT ISO Integration	25-29
Wiring Diagram	**30**
Pin Outs	**31-33**
Warranty Statement	**34**

Introduction

Read this manual carefully to ensure correct steps are done to operate the applicator. The 700 Series Preservative Applicator System is designed to apply Baler's Choice buffered propionic acid (made by Harvest Tec) to the forage crop as it is baled. **Use of alternative products may cause system complications and voids Harvest Tec manufacturer's warranty.** Failure to follow instructions can result in personal injury or equipment malfunction. If you need parts for the system, please view the Parts Breakdown within this manual and contact your local authorized dealer to order replacement parts.

The 700 Series Preservative Applicator System is designed to apply buffered propionic acid to the forage crop as it is baled and will adjust the rate of application based on moisture and tonnage of the crop being harvested. This manual will take you through the steps for installing the applicator. If you are unsure about installing the system after consulting this manual, contact your local authorized dealership for additional assistance. If you need parts for the system, please see the parts breakdown in the back of this manual and contact your local authorized dealer to order the parts. This applicator is designed to apply Harvest Tec buffered propionic acid.

Right and Left sides are determined by facing in the direction of forward travel.

System Requirements – System is not ISO compatible with L331 and L341 Balers

The Baler must have Software Version 2.0.7 or higher
GreenStar 4th Generation Arm Command Display must have version 8.10.2393-23

Made for Harvest Tec Display, Baler Integration, or Tablet
For best performance ensure all displays are running the latest operating system

System Overview

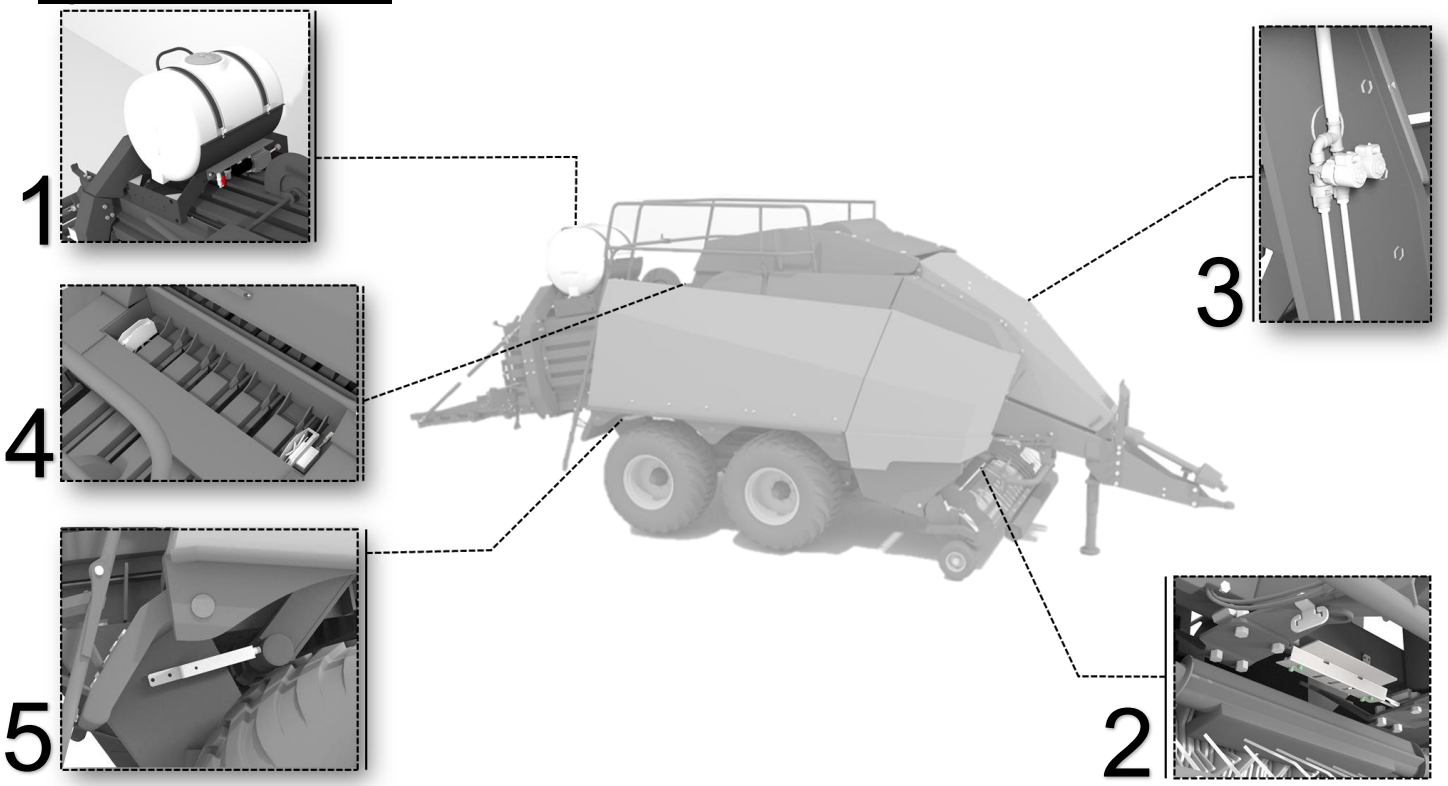

The 700 series applicator system consists of five main areas of installation, these include:

1) Tank Mounting Installation
2) Spray Shield Installation
3) Solenoid Installation
4) Star Wheel Installation
5) End of Bale Installation

Tank, Saddle, and Pump Installation

This will mount on the bale chute towards the rear of the baler. All mounting and parts should be verified prior to beginning installation. Follow *Installation of Pump Manifold and Saddle* section for step-by-step instruction.

Spray Shield Installation

The spray shield assembly is designed to spray the hay evenly as the baler picks it up. This holds the tips and is connected to plumbing to apply preservative as precisely as possible. Follow the *Spray Shield Installation* section for sketches of the spray shield nozzle holders and step-by-step instruction.

Solenoid Installation

The dual solenoid setup is to be mounted as close to the spray shield as possible. This will provide the best result to ensure the proper output of preservative is applied through the nozzles. View *Spray Shield installation* section for instructions of solenoid mounting.

Star Wheel Installation

This is the moisture setup for the applicator system, installation will be done on top of the bale chamber so the star wheels can make sufficient contact with the bale. Follow *Star Wheel Mounting* sections for step-by-step instruction.

End of Bale Installation

The end of bale sensor determines the position of the needles on the baler. When the needles cycle the sensor communicates this information to the 700 series. Installation of this sensor is required for use with the Harvest Tec Virtual Terminal. Follow *End of Bale Sensor Installation* section for step-by-step guide.

110 Gallon Tank, Saddle, and Legs
Tank Saddle Kit (030-0491J-TK)

Tank Lid
Part #:005-9022H (8" Dia.)
See embedded letter on tank to verify which lid

Tank 110-gallon
Part #: 005-9208

Handrail
Part #: 001-6707HR

Tank Straps
Part #: 001-4402B

Tank Saddle
Part #: 001-6707A

Tank Fittings
Part #: 005-9100

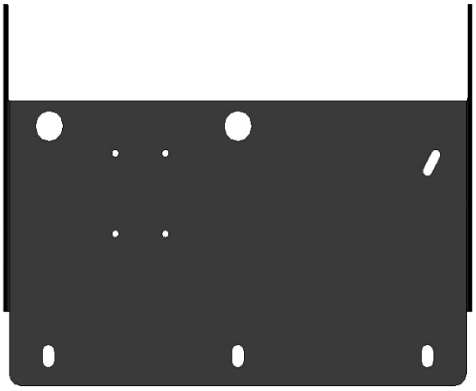

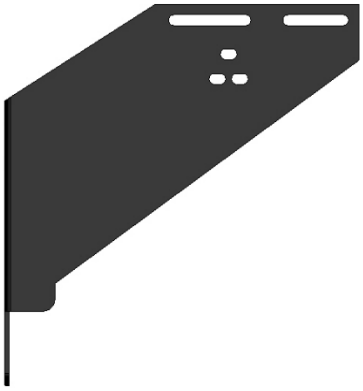

John Deere L330 / L340
Tank Legs
Part# 001-6707J

Complete Replacement Tank
Part# 030-9208

Complete Tank Saddle Kit
Part# 030-0491J-TK

Tank & Saddle Kit (030-0491J-TK)

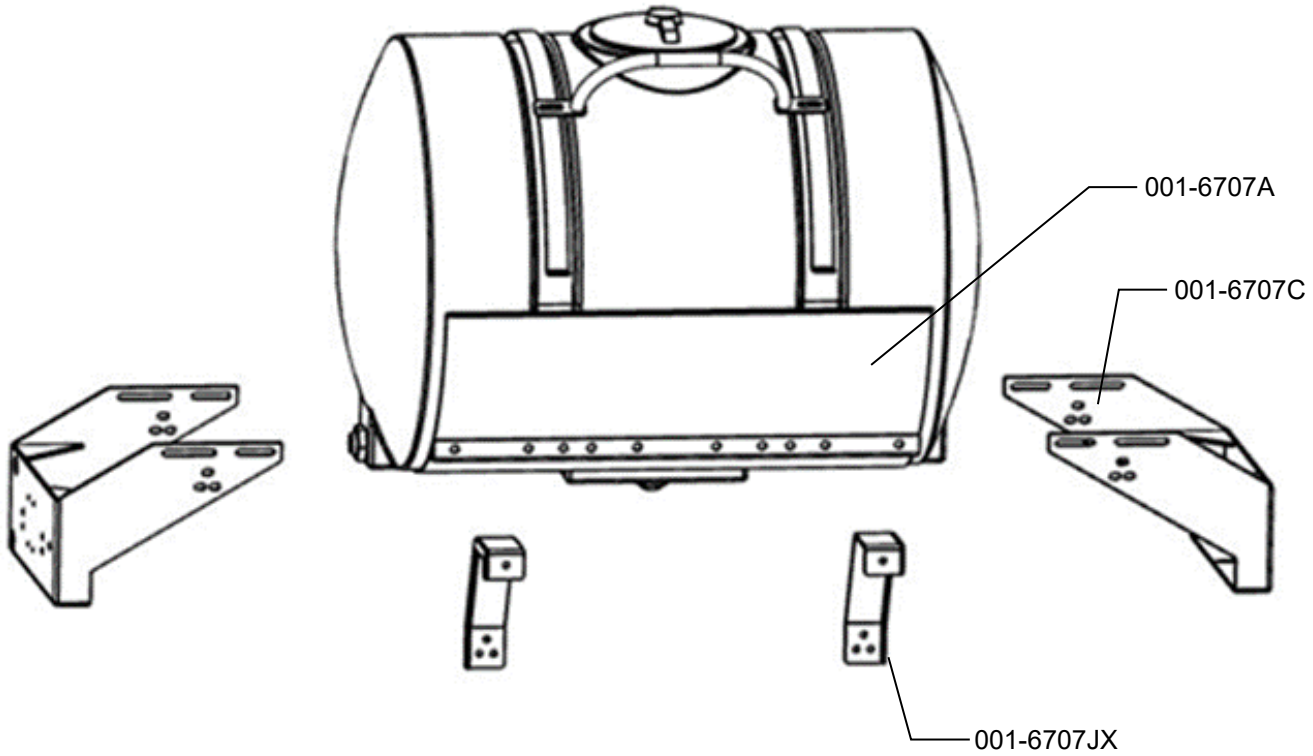

Installation - 3x3 and 3x4 Balers

Locate parts bag 2. Prior to mounting the assembly onto the back of the bale chamber, install both saddle legs (001-6707J) loosely onto the saddle (001-6707A) with six 3/8” x 1-1/4” bolts, locks, and flat washers. The mounting slots in the legs will attach to the second and fourth weld nuts (3 x 3) first and second for (3 x 4), in from each end of the saddle, on both sides.

1. The tank legs bolt to the sides of the chamber on each side with three 1/2” x 1-3/4” carriage bolts, using existing holes in the chamber. Some bale chambers may require holes to be drilled to accommodate the mounting of the tank legs (see pictures below). Mark and drill holes as necessary. Tighten the legs to the chamber prior to centering the tank saddle and tightening the legs to the saddle.

2. Install the pump plate extender brackets (001-6707JX) to the legs.

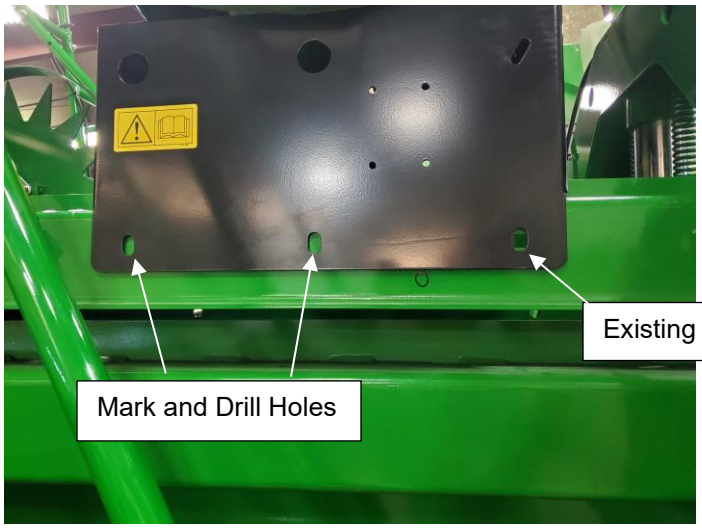

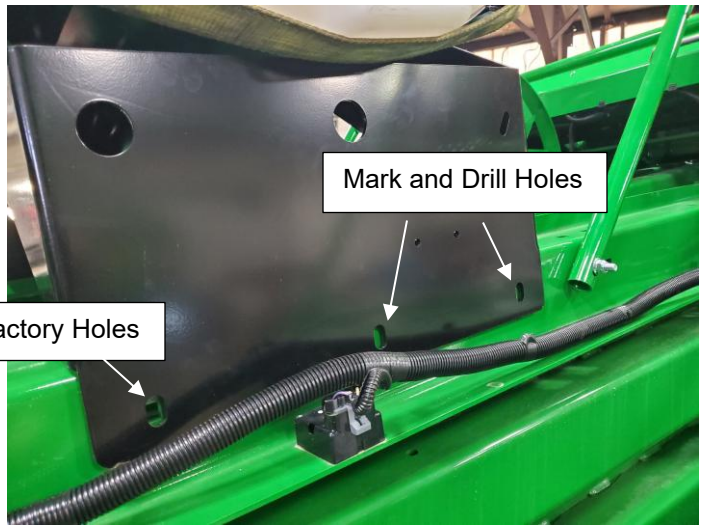

<u>Pump Plate Assembly</u> (PMP-7636P)

Using Pump Plate Mount (PMP-7636MT)

Installation

1. Attach (001-4648XB) Bracket to pump plate brackets (001-6707JX) with remaining hardware from #6 parts bag.
2. Connect control (006-7671LS) to pump plate (PMP-7636P) with four 10/32” x 5/8” Philips flat head screws and nylock nuts.
3. Attach triangle plug from flow meter to controls and rubber molded plug from pump to mating plug from control.
4. Attach pump plate assembly (PMP-7636P) to bracket (001-4648XB) with two 3/8” x 3/4" flange bolts and nuts.
5. Locate parts bag 16. Locate elbow (003-EL3412) and thread into bottom of tank.
6. Locate parts bag that was with pump plate assembly and choose fitting to place in valve next to filter.
7. Run 1/2” hose from bottom of tank to valve on pump plate and secure with hose clamps.
8. Chose and thread fitting into pump discharge.

Note: Pressure washing the pump plate can lead to water damage internally of the ISO Pump Module (IPM). DO NOT PRESSURE WASH PUMP PLATE

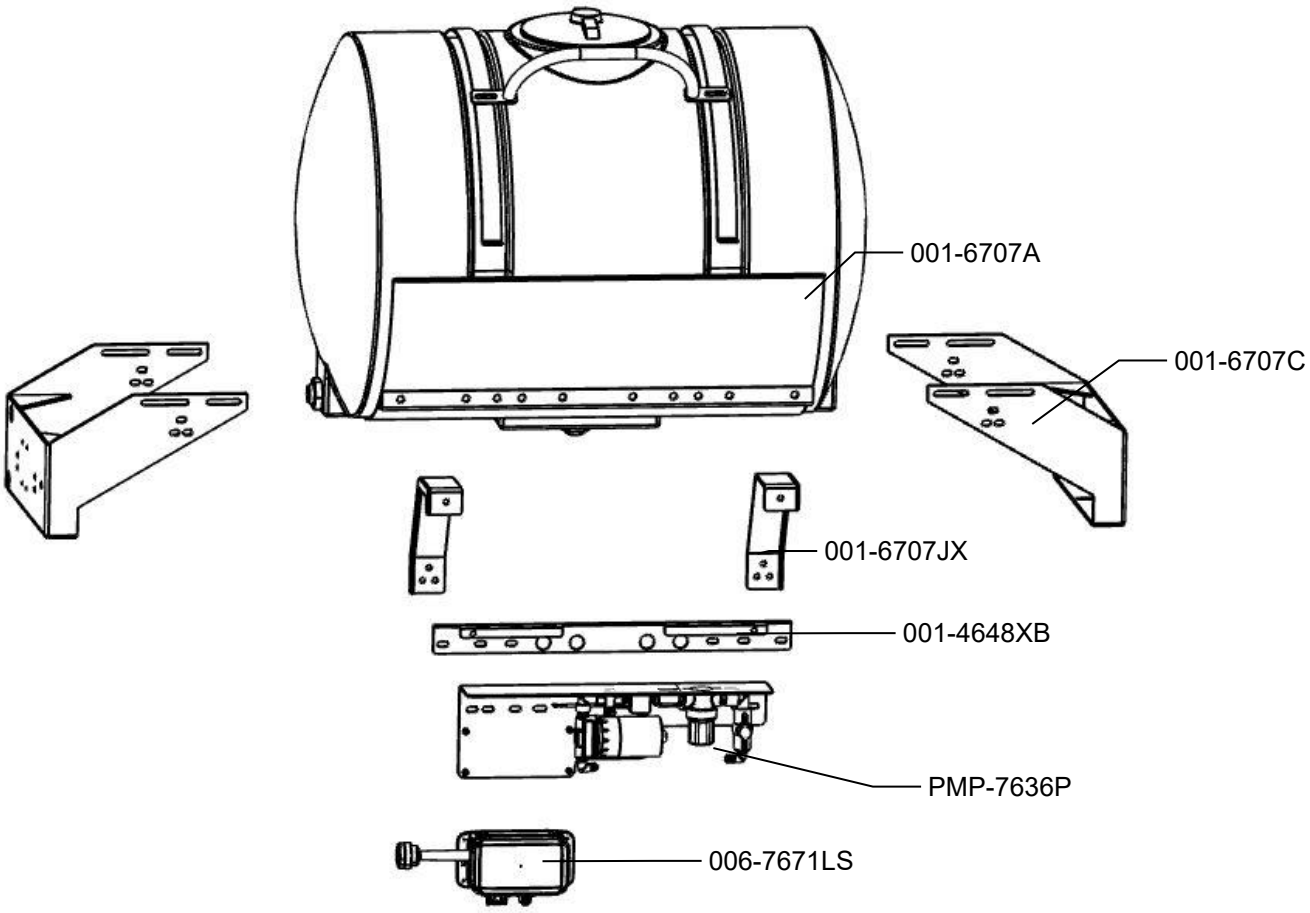

Parts Breakdown for Pump Assembly

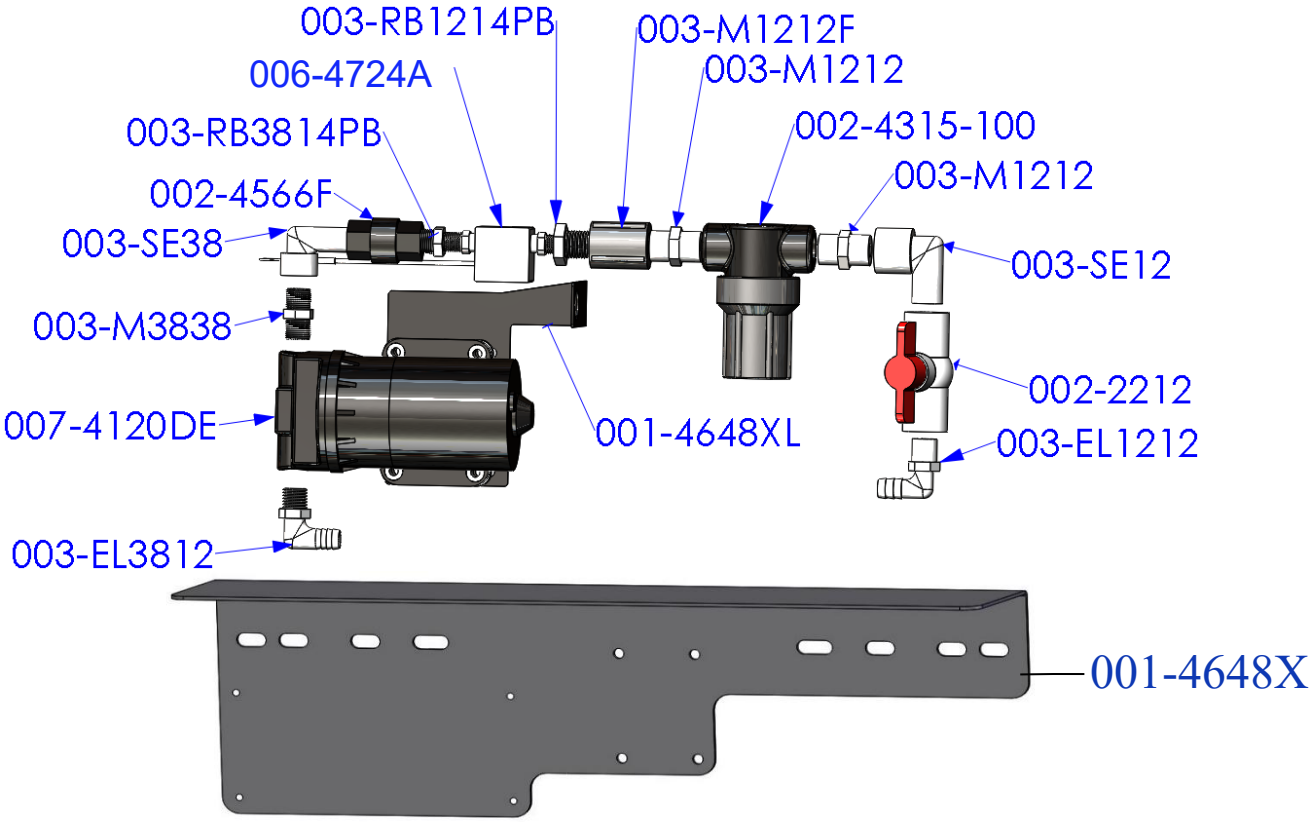

Part#	Description	Qty	Part#	Description	Qty
003-EL3812	3/8”MPT X 1/2"HB Elbow	1	003-M1212	1/2" Union	2
007-4120DE	700/300 Series Pump	1	002-4315-100	1/2" Line Strainer-100 Mesh	1
003-M3838	3/8” x 3/8” Union	1	003-SE12	1/2" Street Elbow	1
003-SE38	3/8” Street Elbow	1	002-2212	1/2" Ball Valve	1
002-4566F	3/8” Check Valve	1	003-EL1212	1/2"MPT x 1/2"HB	1
003-RB3814PB	RB 3/8” x 1/4” Reducer	1	001-4648XL	300 Pump Support	1
006-4724A	Flow Meter-Deutsch Plug	1	001-4648X	Pump Plate Mount	1
003-RB1214PB	RB 1/2" x 1/4" Reducer	1	003-A1212*	1/2" MPTx1/2”HB(Not Pictured)	1
003-M1212F	1/2" Coupler	1	003-A3812*	3/8" MPTx1/2”HB(Not Pictured)	1

*Note: Due to alternative baler designs, elbow 003-EL3812 can be replaced by straight fitting 003-A3812. Elbow 003-EL1212 can also be replaced by straight fitting 003-A1212. Both straight fittings are included.

Filter Bowl Replacement Parts

002-4315F Filter Bowl
002-4315D Filter Bowl Gasket
002-4315A Replacement Screen-100 Mesh
002-4315B Replacement Screen- 80 Mesh

Pump Plate Mounting – PMP-7636SMT
001-4648XB Pump Plate Adapter

Pump Plate Mounting – PMP-7636MMT
001-4648XB Pump Plate Adapter
001-6707FU Pump Plate Holder (qty 2 needed)

UHD Pump Plate Mounting – PMP-7636UMT
001-4648U Remote Pump Plate Mount (qty 2 needed)

Completed Assembly – PMP-7636P

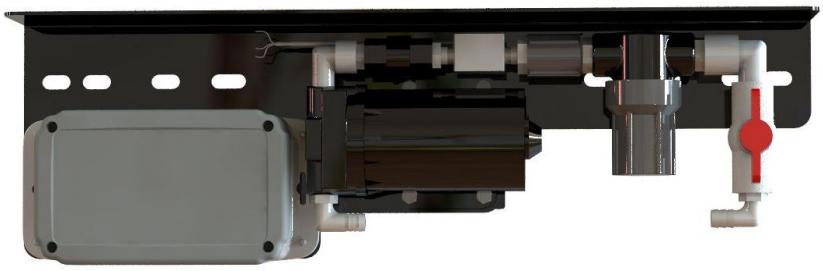

Pump Plate Mounting – PMP-7636JMT
001-4648VB Pump Plate Adapter
001-6707JX Pump Plate Holder (qty 2 needed)

<u>Drain/Fill Line</u> (030-0493DFK)

1. Locate Parts Bag 1.
2. Thread 3/4” elbow fitting into end of tank.
3. Run 3/4" hose from the elbow down the frame to the bottom of the baler.
4. Drill 1/4” (7mm) holes to accept the Valve Holder Bracket and use 5/16” x 1” self-tapping screws.
5. Connect valve assembly to other end of hose. Place hose clamps on both ends.
6. Secure hose to frame using cable locks.
7. Install supplied safety decals (DCL-8001 & DCL-8005) next to the ball valve assembly.

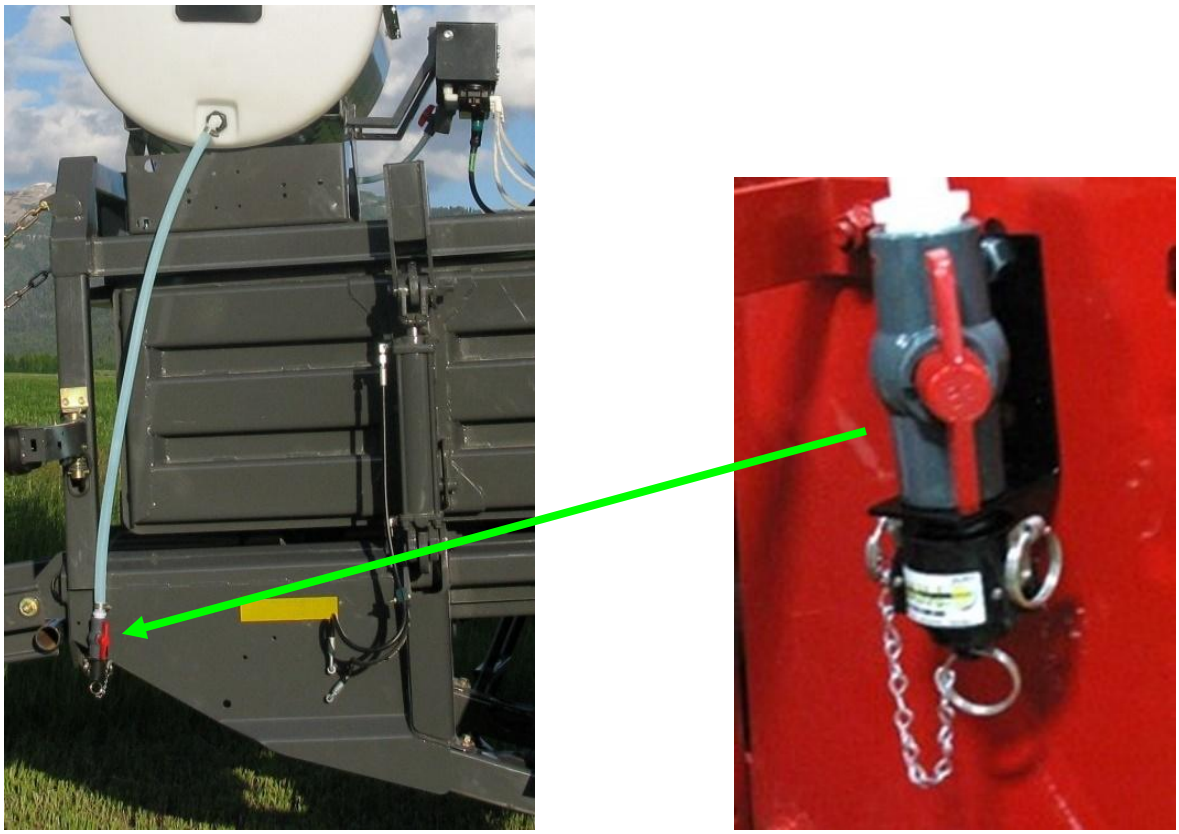

Parts Bags Breakdowns

PBA-1

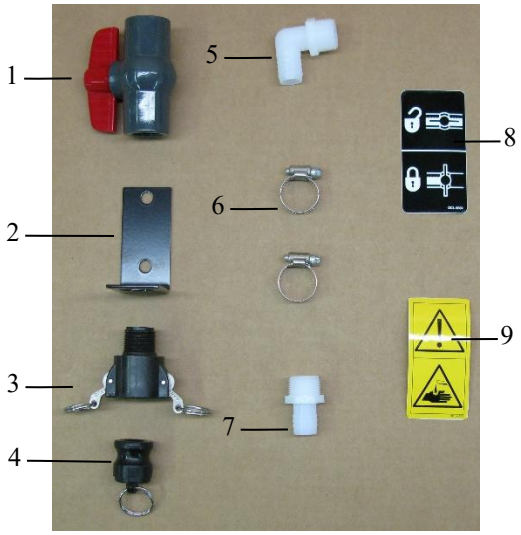

Ref	Description	Part #	Qty
1	3/4" Ball Valve	002-2200	1
2	Valve Holder	001-6702H	1
3	Female Coupler	002-2204A	1
4	Male Shut-Off Plug	002-2205G	1
5	3/4” x 3/4" Elbow	003-EL3434	1
6	#10 Hose Clamp	003-9004	2
7	3/4" x 3/4" Straight Fitting	003-A3434	1

Complete Drain Fill Kit 030-0493DFK
(Includes 3/4" tubing below)

PBP-16

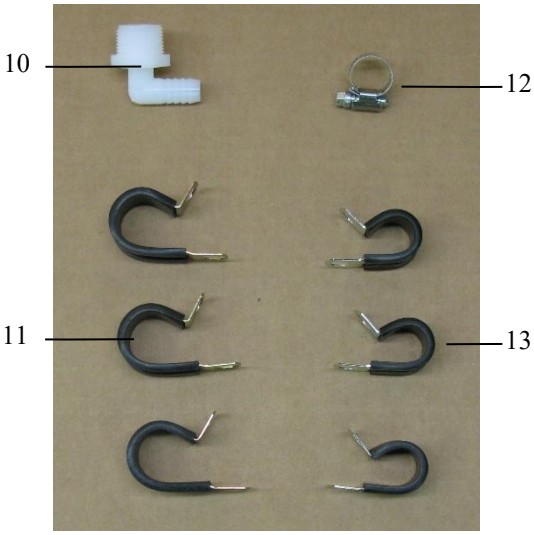

Ref	Description	Part #	Qty
8	Valve Decal	DCL-8004	1
9	Hazard Decal	DCL-8001	1
10	3/4" x 1/2" Elbow	003-EL3412	1
11	3/4" Jiffy Clip	008-9010	3
12	#6 Hose Clamp	003-9003	1
13	Small Jiffy Clip	008-9009	3

Hoses

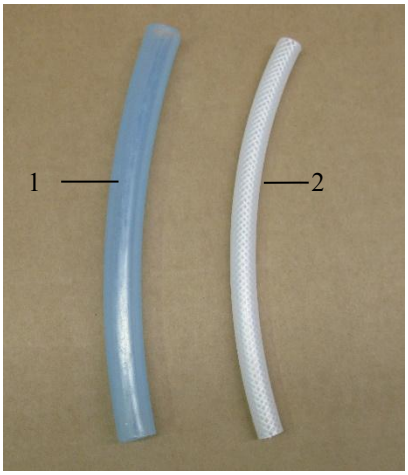

Ref	Description	Part#	Qty
1	1/2” Hose (Tank to Solenoid)	002-9001	30’
2	1/4" Hose (Solenoid to Tips)	002-9016	5’
NP	3/4" Hose (Drain/Fill Line)	002-9002	10’

Spray Shield Assembly (030-4525JC)

The spray shield assembly is designed to spray the hay evenly as the baler picks it up.

Installation Kit 4525JC

Locate the two bolts shown in. Remove factory bolts and install spray shield holder (001-4435EJ). Install bolts and tighten. Install spray shield assembly (001-4435ES) and secure with two supplied lynch pins. Use the inside nozzle holes spaced 10” (25cm) apart on 3x3 balers and the outside nozzle holes on 3x4 balers.

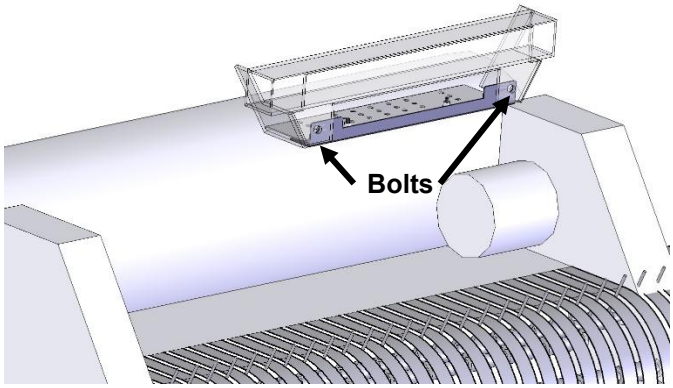

4525JC Installation Kit Breakdown

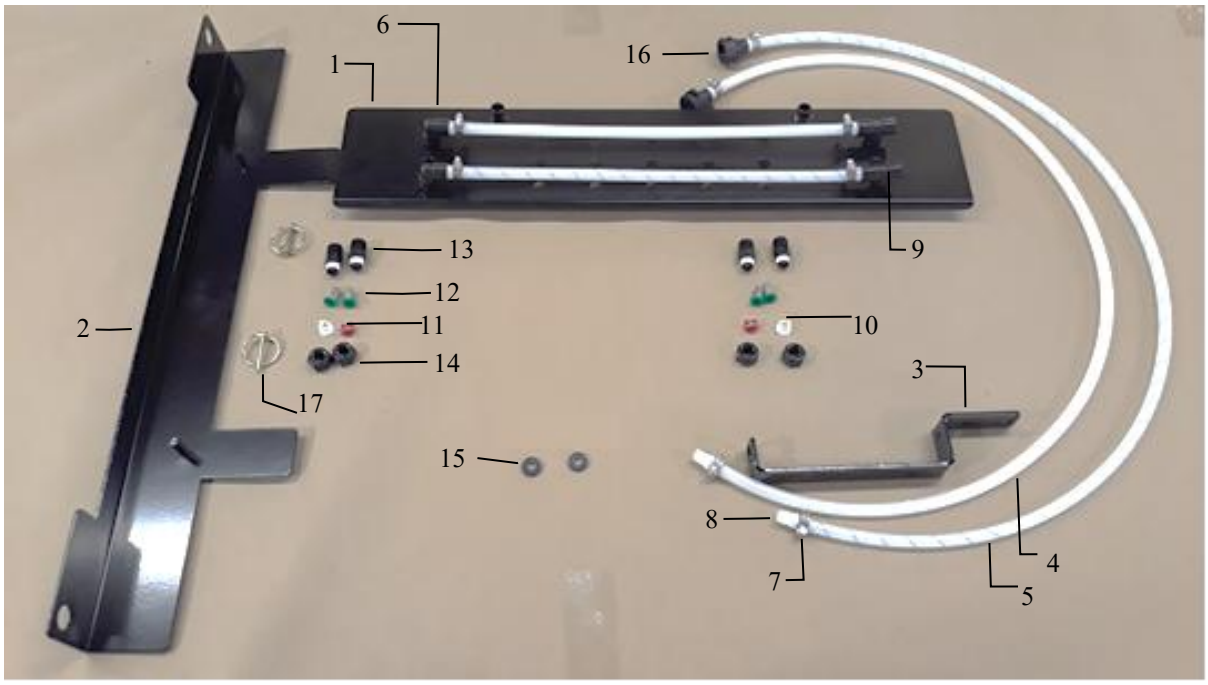

Ref	Description	Part #	Qty	Ref	Description	Part #	Qty
1	Spray Shield	001-4435ES	1	10	1/4” Tip	004-XR11008VK	2
2	Shield Mounting Bracket	001-4435EJ	1	11	1/4” Tip	004-XR11004VK	2
3	EOB Sensor Bracket	001-4648J	1	12	Tip Strainer-100 Mesh	004-1203-100	4
4	1/4” Braided Hose	002-9016	5.5	13	Nylon Nozzle Body	004-4722	4
5	1/4” Braided Hose–Blue	002-9016B	5.5	14	Nylon Nozzle Cap	004-4723	4
6	1/4” 90 Deg. Elbow	003-SE14F	2	15	Rubber Washer	004-1207W	2
7	Mini Hose Clamp	003-9002	8	16	Female Quick Connect	004-1207H	2
8	1/4” x 1/4” Straight Fitting	003-A1414	8	17	3/16” Lynch Pin	008-4576	2
9	1/4” Tee Fitting	003-TT14SQ	2				

Complete Installation Kit 030-4525JC

Solenoids and Hose Routing

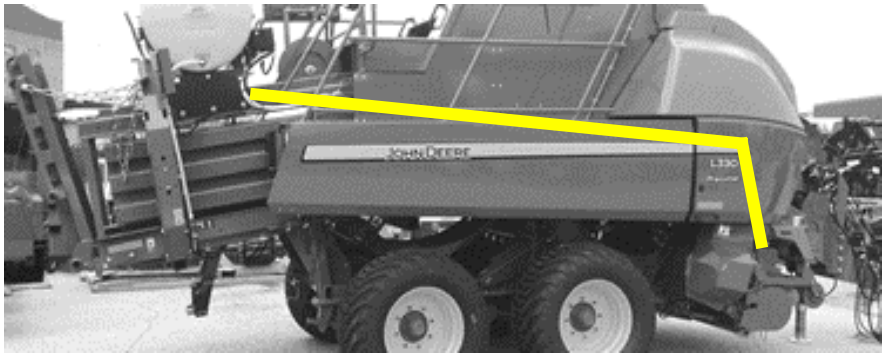

A. Once Spray Shield is mounted, locate the Solenoid Kit SOL-3SP-LS. Pulsing Solenoids (002-2203F) come pre-installed on the Solenoid Mount Plate (001-4648DSH). Mount this assembly in an accessible location as close as possible (max distance 3ft) to the Spray Shield. This will ensure the most precise application of the preservative.

Pulsing Solenoids
002-2203F

Solenoid Harness
006-3650-S1

Solenoid Mount
001-4648DSH

B. Once solenoid bracket mounted, streamline solenoid harness 006-3650-S1 along baler back to connection on main baler harness 006-765B2 once installed. Ensure that the solenoid with <u>white dot</u> attaches to 'SOL 1' and solenoid with <u>blue dot</u> attaches to 'SOL 2' harness connection ports. Ensure wire routing does not interfere with any moving parts or hydraulic lines, securing harness as needed.

C. Route 1/2" hose along the path or similar, inside of the baler from the pump plate to the solenoid plate, as shown in picture above. Keep hoses away from moving parts and hydraulic hoses. When all hose connections are made to the tank, pump, solenoids, and spray shield secure with existing cable clamps or use cable ties.

D. Connect 1/4" reinforced hoses from Spray Shield to Solenoids. Note: Ensure solenoid with white dot connects to white hose/white spray shield dot. Hose with blue stripe connects to solenoid with blue dot.

Tip Connections

Dot Color	Tip	Hose Color	Position on 006-765B2
White Dot	8004 or 11004	White	Sol 1
Blue Dot	8008 or 11008	Blue Stripe	Sol 2

700 Solenoid Package for Large Square Balers

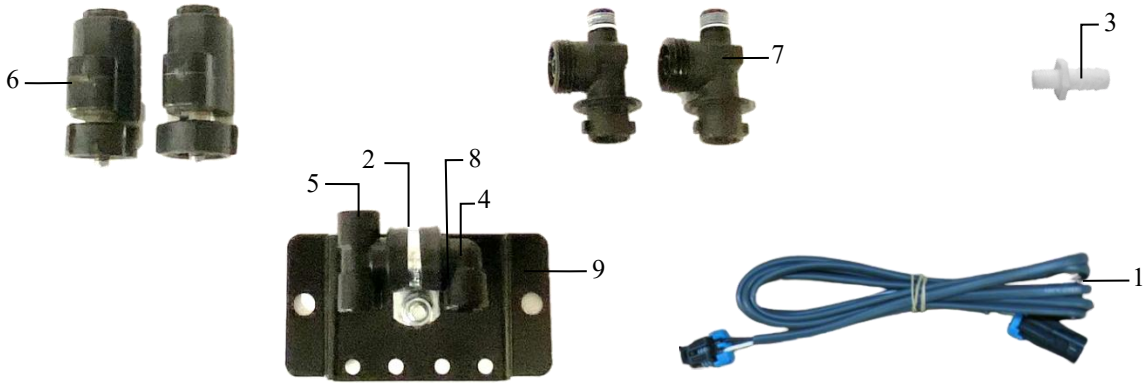

Ref	Description	Part #	Qty	Ref	Description	Part #	Qty
1	Solenoid Harness (5')	006-3650-S1	2	6	Solenoid	002-2203F	2
2	Hose Clamp #6	003-9003	1	7	Solenoid Valve Body	004-1207VF	2
3	1/4" x 1/2" Straight Fitting	003-A1412	1	8	1/4" Nipple	003-M14	1
4	1/4" Elbow	003-SE14F	1	9	Solenoid Holder	001-4648DSH	1
5	1/4" Tee Fitting	003-TT14SQ	1	NP	O-Ring Kit (Replacement)	002-2203FG	2
					Complete Assembly	**SOL-3SP-LS**	

Expanded View of Pulsing Solenoid (002-2203F)

Replacement Pulsing Solenoid O-Ring Kit available (002-2203FG)
(Includes EPDM O-Rings 6, 8, 9 shown below)

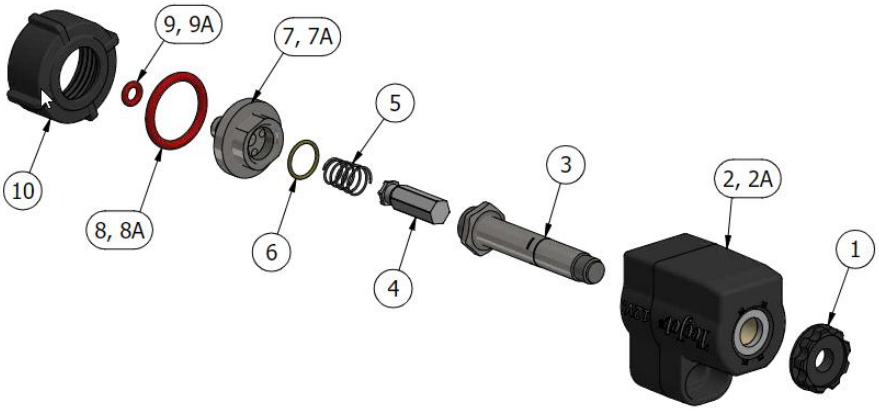

To clean solenoid valves:

The Center Section can be removed from Housing #2 by loosening #1 from #3. Once removed, use wrenches on components #3 and #7 and gently turn to loosen and separate. Soak parts #3-10 in warm soapy water, clean with a soft bristle brush, rinse with clean water to remove buildup before reassembly.

Main Wire Harness - Routing and Connections

John Deere L330 / L340 Balers Harness Routing and ISOBUS Connection*

Route cords 006-765B2 along this path. Keep cords away from moving parts and hydraulic hoses. Secure with existing cable clamps or use cable ties. When all connections are made, secure wires as shown.

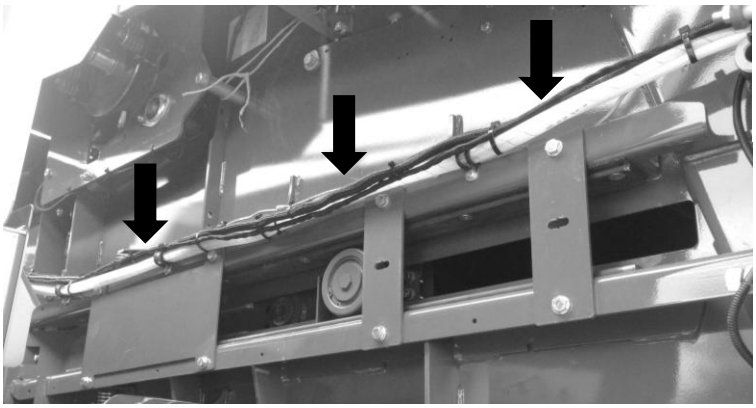

Route mounting harness and hoses from IPM and ICM as shown in picture left, secure with cable ties.

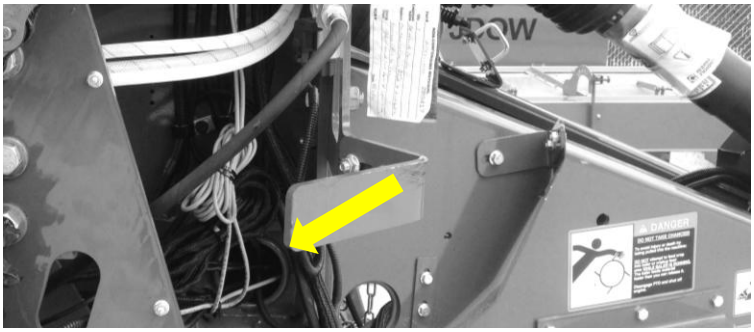

Route ISO Integration Harness (006-765VA) to opposite side of baler through support cylinder as shown in picture left.

Applicator is not able to ISO integrate with L331 and L341 Balers – place terminating resistor 006-700R on one harness CAN port to run the system as a stand-alone system

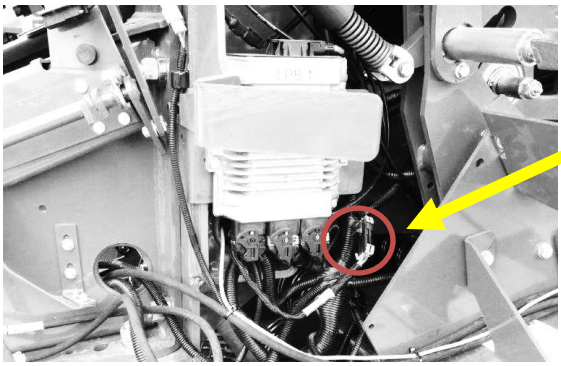

Locate harness 006-765VA and connect to baler interface harness next to baler's processor (below) on front left side of baler.

Remove baler terminating resistor and connect to short pigtail on 006-765VA Harness.

Control Box and Wiring Harnesses

Ref	Description	Part#	Qty
1	Power Lead Baler 35’	006-765B2	1
2	Power lead tractor	006-765IC	1
3	Key Switch Wire	006-765CPH	1
4	ISO Pump Module	006-7671LS	1
5	ISO Communication Module	006-6673	1

Ref	Description	Part#	Qty
NP	Baler Integration Harness	006-765VA	1
NP	Dust Plug Kit	006-765DP	1
NP	Optional Terminator (for use as stand-alone system)	006-700R	1
NP	USB-C to USB-A tablet Cable (Optional use for tablet connection)	006-6672USBX	1

Star Wheel Moisture Sensor Kit

1. Locate spacer plates (001-6707ES), both star wheel moisture sensors (030-4642U / UE), twine diverters (001-4644H / 4645H) and hardware parts bag.
2. The star wheels will be placed as close to the knotter as possible. Follow installation instructions for your specific baler model.
3. Install with four (two per side) 5/16” x 3-1/4” Allen buttonhead cap screws. Make sure the Allen heads are in the bale chamber side of the star wheel.
4. The star wheel with the 6-position plug will need to be placed on the right side of the baler along with the twine diverter with two extra holes. 030-4642UE Star Wheel must rotate in the indicated clockwise direction as the bale moves thru the bale chamber. Reference the rotation indicator sticker on star wheel block.
5. The star wheel with the 2-postion plug will need to be placed on the left, or ladder side of the baler.
6. Place a spacer plate between each star wheel block and the bale chamber with twine diverter on top.
7. Secure spacer plates, star wheels and twine diverters to baler with 5/16” hex nuts and lock washers. Hand tighten with wrench or ratchet- not to exceed 13 ft-lb torque. **DO NOT USE AN IMPACT TO TIGHTEN.** Over torquing star wheel mounting hardware can cause pre-mature wear of the star wheel blocks.
8. Connect moisture harness (006-7307EM2 or 006-7307EM3) to both star wheels.
9. Route Moisture Harness (006-7303EM2 or 006-7307EM3) along top of baler, to the pump module located on the tank saddle at the back of the baler.
10. Attach rectangle plug of moisture harness to bottom of ISO pump module (IPM).

The following pages contain detailed instructions for specific baler make and models:

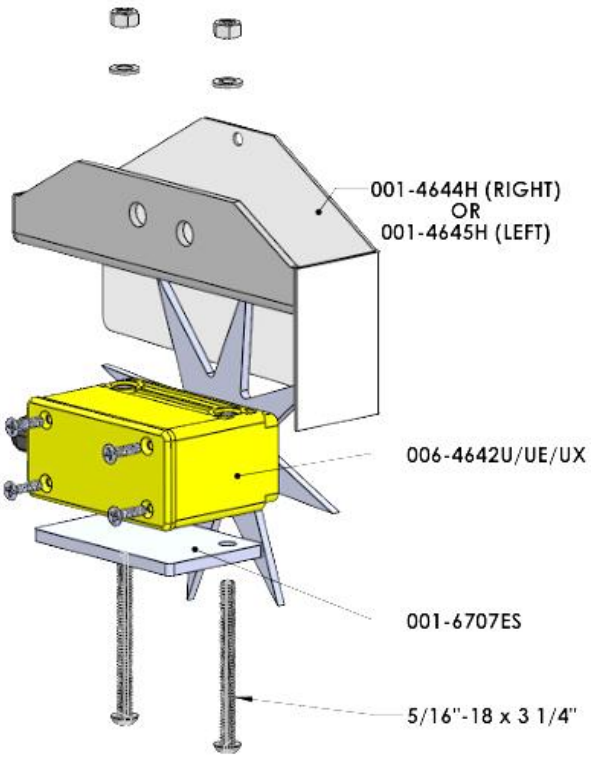

Star Wheel Sensors- 700 Series

For Large Square Balers – Reinforced Yellow Block 2026

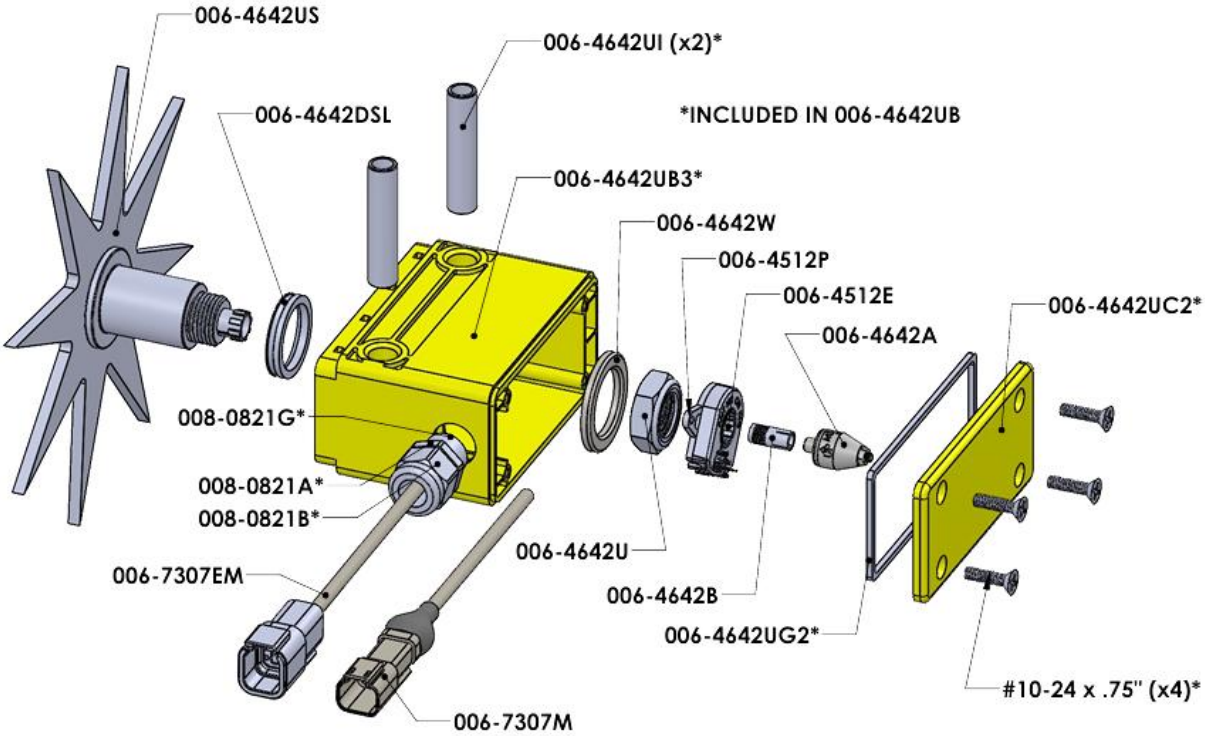

Description	Part#	Qty
Star Wheel (includes swivel insert)	006-4642US	1
Dust Seal Gasket	006-4642UG	1
Star Wheel Block Only	006-4642UB3	1
Star Wheel Block End Cap	006-4642UEC	1
Block Inserts	006-4642UI	2
Wire Compression Grommet	008-0821A	1
Grommet Locking Nut (internal)	008-0821B	1
Washer for Wire Grommet	008-0821G	1
Bearing Washer	006-4642W	1
Star Wheel Nut	006-4642U	1
Encoder Mount (030-4642UE only)	006-4512P	1
Encoder (030-4642UE only)	006-4512E	1
Swivel Insert	006-4642B	1
Swivel Insert	006-4642B	1
Electric Swivel	006-4642A	1
Electric Swivel	006-4642A	1
Star Wheel Block Gasket	006-4642UG2	1
Star Wheel Block Cover	006-4542UC2	1
Encoder Harness Plug (6 Pin) (030-4642UE only)	006-7307EM	1
Moisture Harness Plug (2 Pin) (030-4642U only)	006-7307M	1

Description	Part#	Qty
Star Wheel Spacer Plate (not pictured)	001-6707ES	1
Star Wheel Mounting Hardware (5/16" x 3-1/4" Allen Head Screws, nuts, locks and washers)		2
Twine Guard -Left	001-4645H	
Twine Guard -Right	001-4644H	
Star Wheel Drilling Template (optional)	001-4642T	
Replacement Star Wheel Block*	001-4642UB	
Complete Non-Encoder Star Wheel	**030-4642U**	
Complete Encoder Star Wheel	**030-4642UE**	
Moisture Harness- Standard (12' and 13' Section lengths)	006-7307EM2	
Moisture Harness- Long (16' and 18' section lengths)	006-7307EM3	
Complete Moisture Kit* -Standard	**MSH-LS-STD**	
Complete Moisture Kit*- Long	**MSH-LS-EXT**	

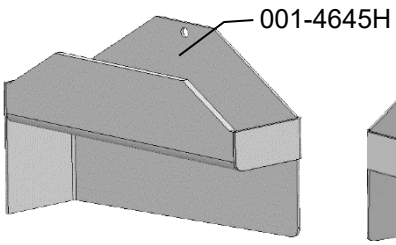

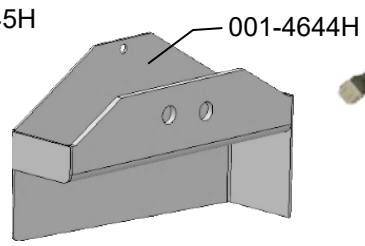

Complete Moisture Kits include encoder star wheel, non-encoder star wheel, left and right twine diverters and long or std. moisture harness.

<u>Star Wheel Moisture Sensors</u> - (MSH-LS-STD)

Installation – John Deere Balers

Remove any material from the bale chute. The star wheels are to be mounted on the transition bracket on both sides of the bale chute located after knotters shown above. Holes have been installed at the factory, however you need to remove bracket and cut 3/4” (19mm) off the bracket as indicated below to allow proper spacing for star wheel assembly. Brackets are located on the bale chute under the catwalk access panel.

Once complete, touch up with spray paint to prevent rusting and place the carriage bolts that mount the transition bracket back in original bracket mounting holes (A) before mounting star wheel assembly (C). Insert the 5/16” x 3” Allen head bolts (B) up through the transition bracket. Place the star wheel block over the nuts. Place twine guard on top of star wheel (D).

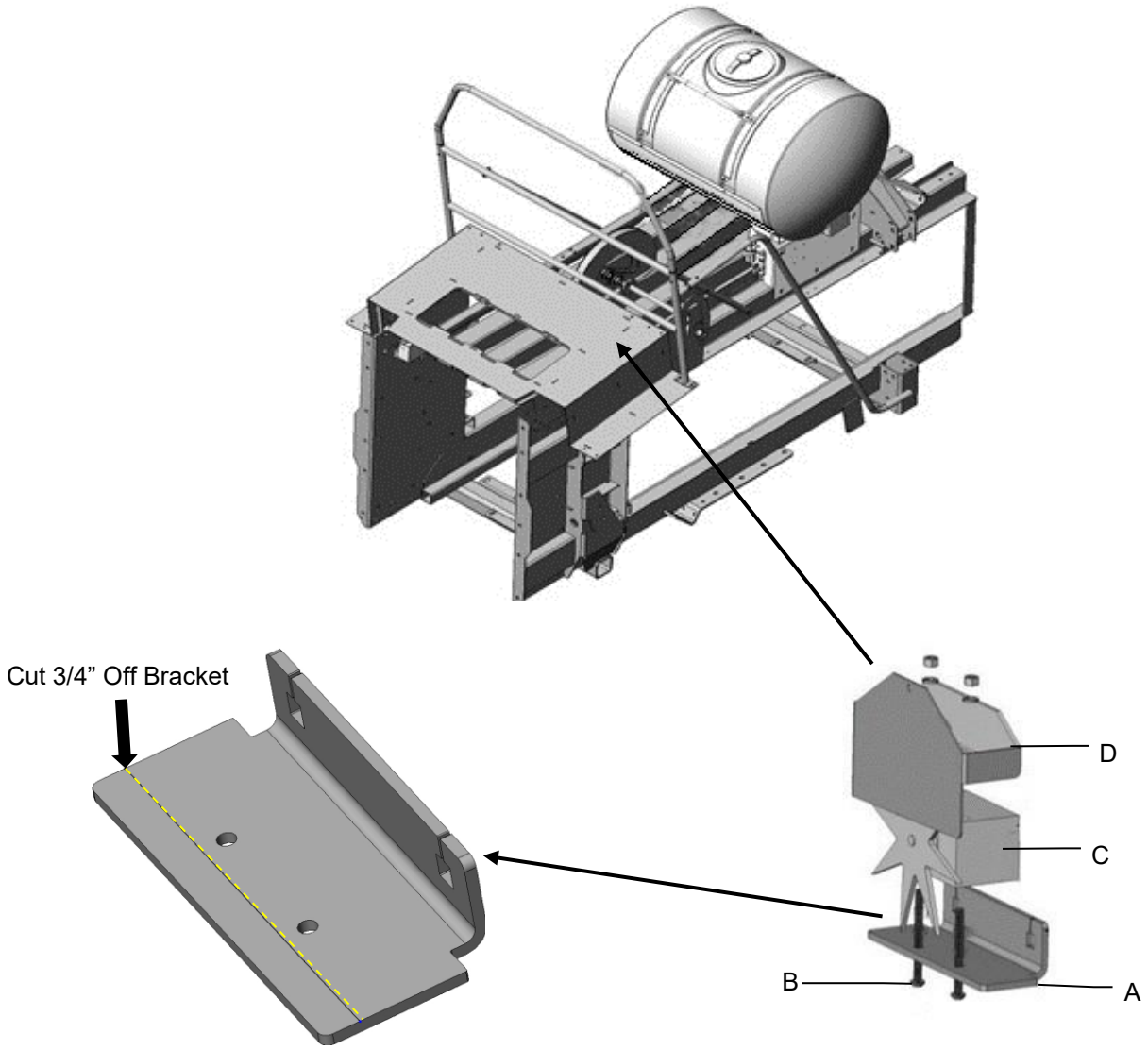

The twine guard containing the two extra holes will be placed on the right side. Encoder Star Wheel (030-4642UE) with the 6-pin plug must rotate in a clockwise rotation while bale is moving through the bale chamber. See rotation decal on encoder star wheel block.

End of Bale Sensor (EOB)

John Deere Balers – 796J

The End of Bale sensor determines the position of the needles on the baler. When the needle cycles the sensor communicates this information to the 700 series that a bale has been made. Installation of this sensor is required for use with the Harvest Tec job records. Reference “Sensor Settings” in Operation Manual.

End of bale sensor bracket (001-4648J) will be used.

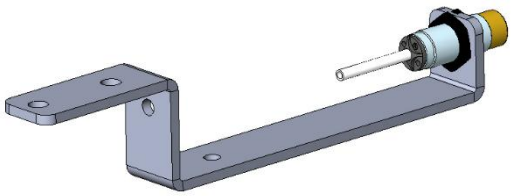

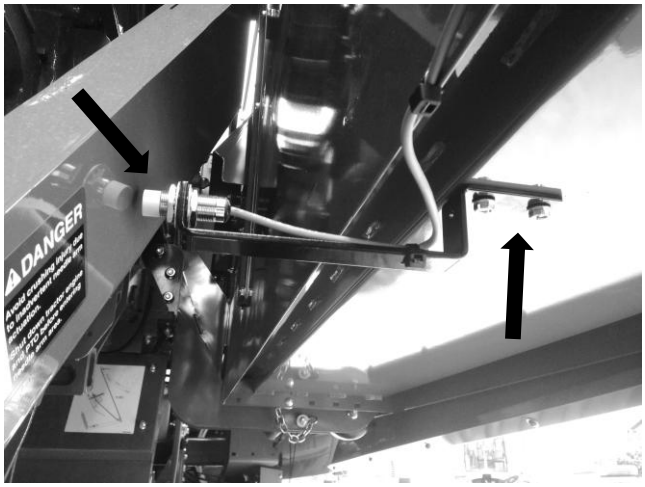

Mount the end of bale sensor bracket (001-4648J) as shown. Under the twine box mark and drill two 3/8” (10mm) holes and attach the bracket using two 5/16” x 1” self-tapping screws, and 5/16” flange nuts. Position the bolts so the bolt heads are inside the twine box, so they do not interfere with the twine. Mount the sensor in hole location centered alongside the needle arm, keep the sensor 1/4” (7mm) from the needle arm and tighten both nuts. Route the sensor wire along the bottom side of the twine box toward the twine box pivot point. Secure the wire to the twine box and around the pivot point to avoid damage to the wire. Once routed around the pivot point, connect the EOB sensor wire to the main baler harness (006-765B2).

End of Bale Sensor

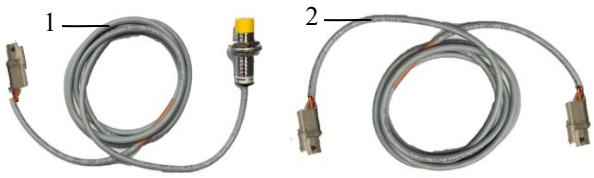

Ref	Description	Part #	Qty
1	End of Bale Sensor	006-7401	1
2	End of Bale Ext.	006-7401EXT	1

Tractor Setup

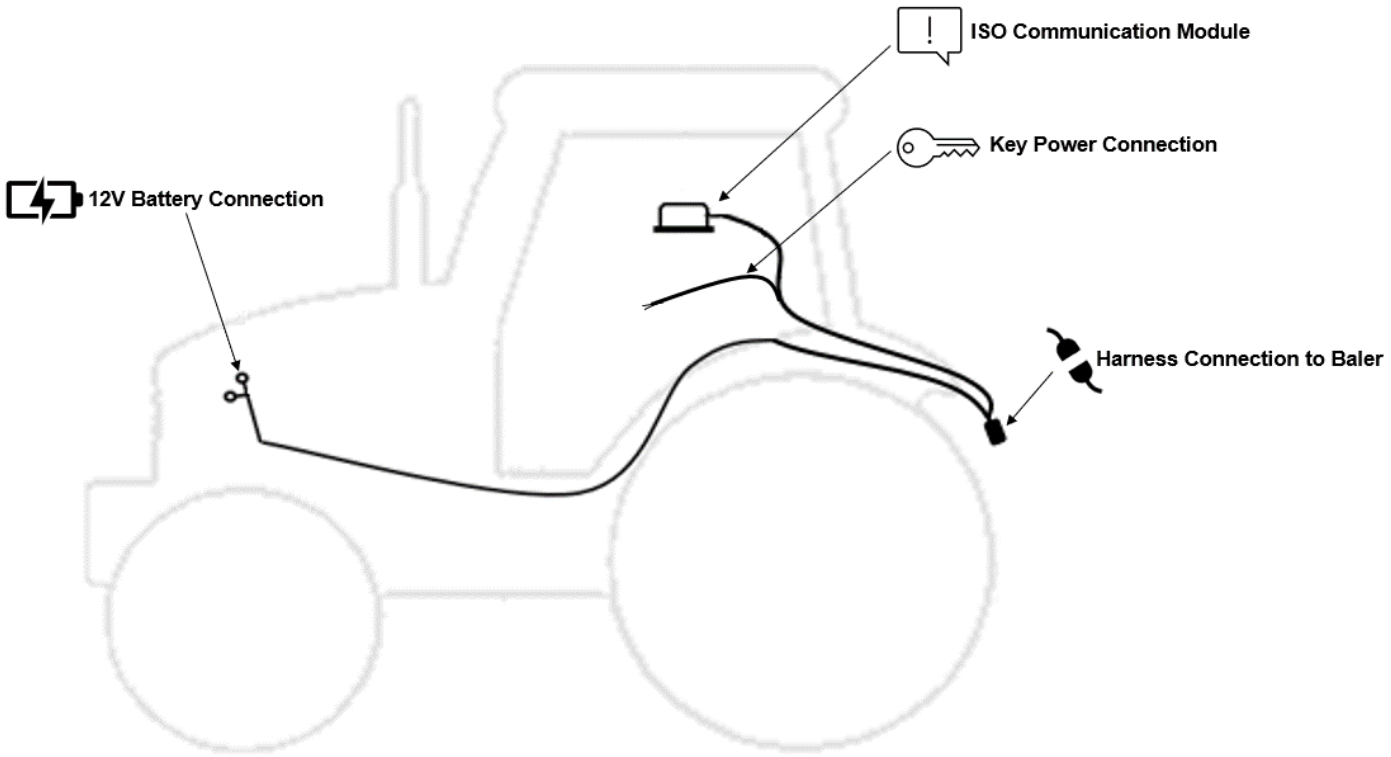

The general tractor setup of the 700 Series applicator can be seen above. The main harness of interest is the tractor power/communication harness (006-765IC). This harness will connect at the tractor battery, to the ISO Communication Module (ICM) mounted in the cab, a keyed power connection point, and connect at the hitch area to the baler power/communication harness (006-765B2). View below to see highlighted installation instruction:

12V Battery Connection

The 12V battery connection must be at the tractor battery. Connection to alternative locations such as an accessory port can cause problems with applicator system.
MUST BE CONNECTED DIRECT TO TRACTOR BATTERY TERMINALS

ISO Communication Module

The ISO communication module is to be mounted inside the cab. Other mounting locations can lead to issues with weathering and operation. Once installed and the system is powered, a green light will turn on the ICM module.

Key Power Connection

Ensure a solid keyed connection is found inside the cab and wired into. Poor keyed power connection can result in applicator system issues.

Harness Connection to Baler

The tractor harness connects at the hitch to baler power/communication harness (006-765B2). This will allow the system components to communicate with one another. Ensure connections are debris and corrosion free.

Display Options

Optional Tablet Display

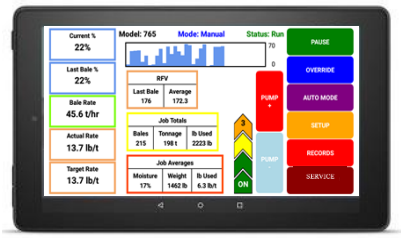

The iOS or Android Tablet displays offer the ability to communicate with the 700 series applicator system via hard-wired connection to the ISO Communication Module (ICM). Through the free Precision Baling App, the operator can set real time baling parameters to ensure the most precise application to every bale. This provides a multi-use option while utilizing the improved app to select objects, enter data, and easily switch through operational screens.

The Tablet Display offers easy integration by connecting a data transfer/charging cable to the USB port on the ICM module (USB port closest to LED light). The Harvest Tec Applicator will display upon opening the app and powering up the applicator system when connected. Tablets can be used in addition to ISO integrated baler VT display (on compatible large square baler systems only).

***Made for iPad® (iOS 15 or higher) or Android Tablet (Does not work with Amazon Fire).**
Required to be running the current operating system or one version previous.
iPads 10+ years are no longer supported by Apple and are unable to download app.
*iPad is a trademark of Apple Inc., registered in the U.S. and other countries.

Optional Harvest Tec Display

The 700 series Harvest Tec Display will allow you to set your real time baling parameters to ensure the most precise application to every bale. This is done by utilizing the improved touch technology to select objects, enter data, and swipe through operational screens.

The Harvest Tec Display offers easy integration by connecting to the additional CAN plug on the 006-765IC harness. Once connected the Harvest Tec display will power up with applicator system.

Note: The Harvest Tec Display must be used as a standalone display, the baler cannot run both ISO integrated (with compatible large square balers only) and also on the Harvest Tec Display. Must be one or the other. Removal of the baler integration harness is required to use the HT Display. Baler ISO integration option is not available for small square and round baler systems.

Optional Harvest Tec Display Kit (030-7670DK)

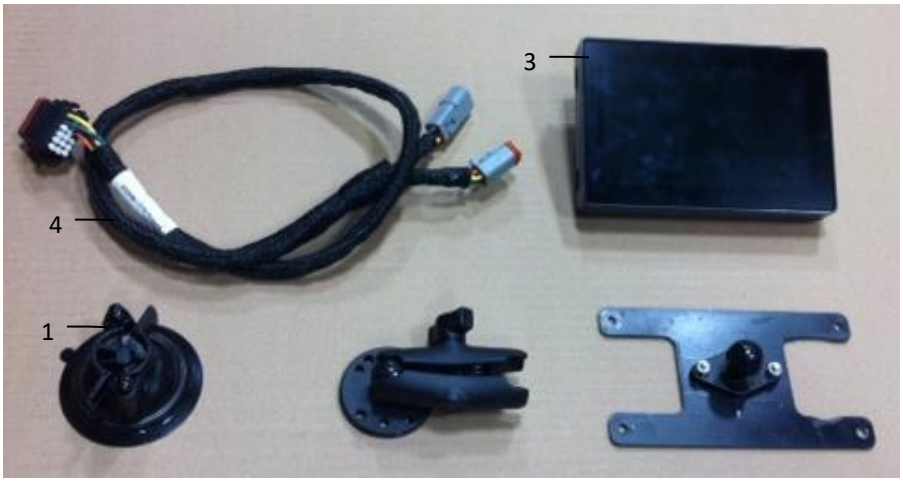

Ref	Description	Part #	Qty
1	Suction Cup Mount	001-2012SCM	1
2	Ram Mount	001-2012H	1
3	Harvest Tec Display	006-765GVT	1
4	Display Harness	006-765GH	1
5	Mounting Plate	001-700GH	1
NP	700 Series Resistor	006-700R	1

Complete HT Display Kit 030-7670DK

Installation Instructions

1. Connect 006-765GH harness connection to 006-765IC tractor harness key power plug.
2. Connect 006-765GH harness to the Harvest Tec VT Display before tightening mount in place.
3. Tighten the mounting and display. Streamline harness as necessary.
4. Once connected, power cycle the system and ensure display is working properly.

NOTE: CANNOT OPERATE APPLICATOR SYSTEM WITH HARVEST TEC DISPLAY AND BALER ISO INTEGRATION or TABLET/ iPad AT THE SAME TIME.

Optional Android Display Kit (030-1670DK)

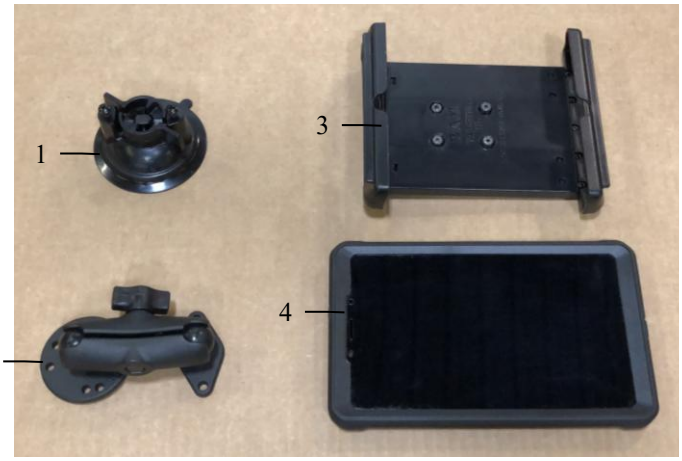

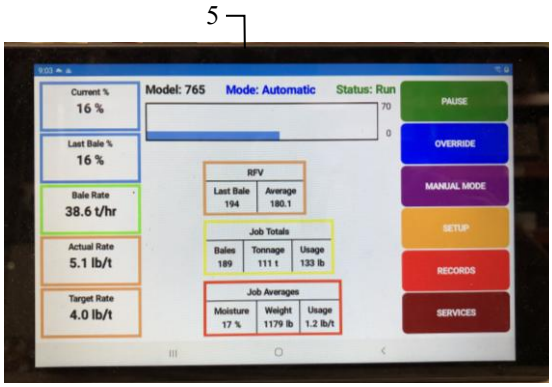

Ref	Description	Part #	Qty
1	Suction Cup Mount	001-2012SCM	1
2	Ram Mount	001-2012H	1
3	Spring Load Cradle	001-2012SLC	1
4	Android Case	001-2012A1	1
5	Android Tablet	006-1670AT	1
NP	USB-C to USB-A Cable	006-6672USBX	1

Complete Android Tablet Display Kit **030-1670DK**

Note: Use a quality communication cable ending with a USB-A connection to connect tablet to (006-765ICM) control module - plug into the USB port showing a tablet.

Optional iPad Display Kit (030-6670DK)

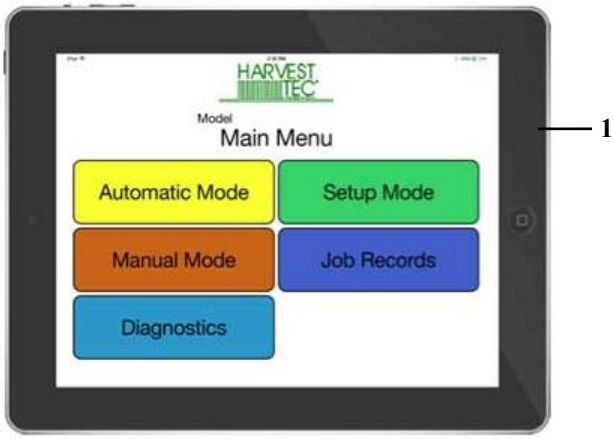

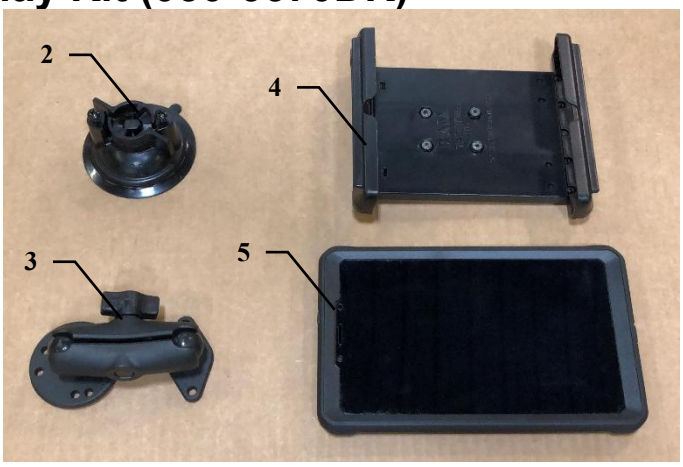

Ref	Description	Part #	Qty
1	iPad Mini 6	006-6670IP	1
2	Suction Cup Mount	001-2012SCM	1
3	Ram Mount	001-2012H	1
4	Spring Load Cradle	001-2012SLC	1
5	iPad Mini 6 Case	001-2012C6	1
NP	Power/Comm. Cable	006-6672USBX	1

Complete iPad Mini Display Kit **030-6670DK**

iPad mini is a trademark of Apple Inc., registered in the U.S. and other countries

Optional ISO Display Adapter Harness (006-7670A or 006-7670F)

For use with a dedicated ISO display

The 700 Series Applicator has the option to tie into compatible dedicated ISO monitors by utilizing the diagnostic port. When connected, the Harvest Tec System will populate as its own object pool within the ISO display. When this object pool is selected, the ISO monitor will then function as a dedicated monitor for the Harvest Tec System.

The Harvest Tec System will function as a stand-alone system when using this adapter.
System will not integrate with the baler ISO system software when using this adapter.

Any tablet connected to the ICM module must be disconnected from the ICM before the Harvest Tec Object Pool screen will activate within the ISO display.
To connect Adapter Harness (006-7670A or 006-7670F), unplug the 4-pin Key Power Plug (006-765CPH) connection from the Tractor Harness (006-765IC) and replace with the plug from the Adapter Harness. Connect the round plug end of the Adapter Harness to the Tractor ISO Display Diagnostic port.

Scan the QR code to view a short video of the
Adapter Harness for ISO Display:

For additional product and service information:
See our YouTube Channel https://www.youtube.com/@harvesttec

ISO Diagnostic Port Adapter (006-7670A)

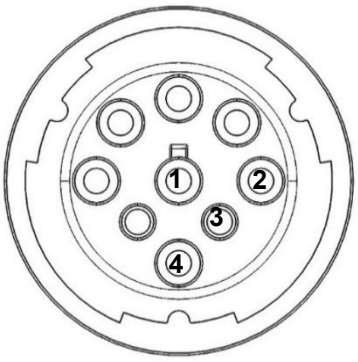

006-7670A connecting plug and pin out

Pin 1	Black	Ground
Pin 2	Yellow	CAN High
Pin 3	Green	CAN Low
Pin 4	Red	12V+ Key Power

ISO Diagnostic Port Adapter (006-7670F)

For Newer Fendt and MF Tractors with plug location in the cab ceiling

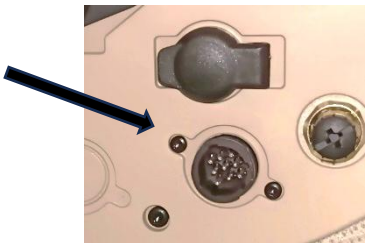

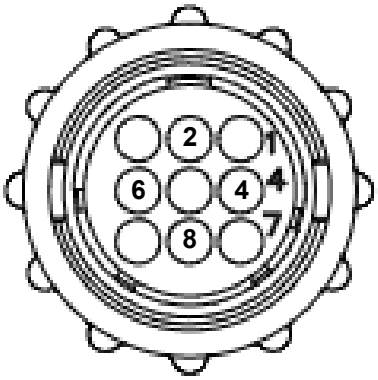

006-7670F connecting plug and pin out

Pin 8	Black	Ground
Pin 4	Yellow	CAN High
Pin 2	Green	CAN Low
Pin 6	Red	12V+ Key Power

Optional Baler VT Integration - L330 and L340 Balers Only

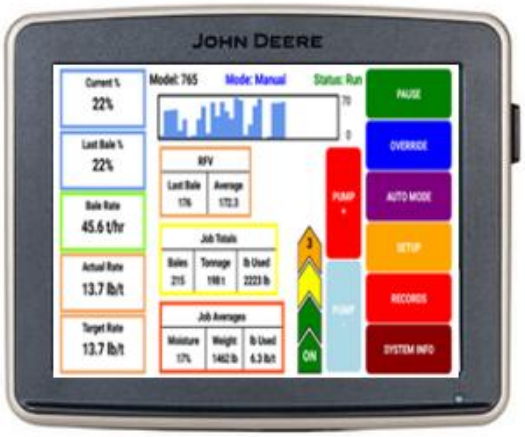

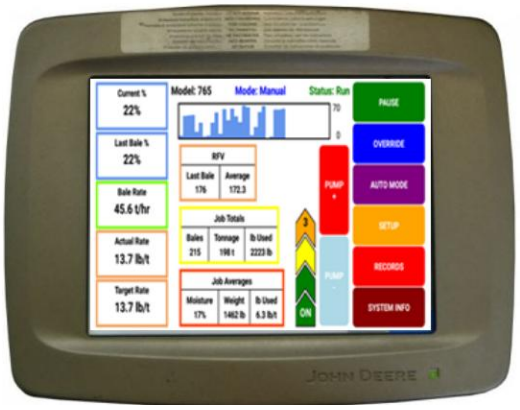

The 700 series integration to the Baler VT allows for the ability to set your real time baling though the baler VT and monitor both baler settings and Harvest Tec system parameters through one monitor to ensure the most precise application to every bale.

The 700 series offers easy integration by connecting to the additional CAN plug on the 006-765B2 harness. Once connected the Harvest Tec system will display with power up of the baler and applicator system.

Baler Display Integration

The ISOBUS Monitor utilizes a combination of soft keys, touch panel, and number menus. All buttons are labeled and color coded.

Baler Monitor Setup

Follow the instructions below to finish setup of the Harvest Tec 796J system through the John Deere ISOBUS monitors.

2600 Series Monitors

1. Starting from the Home Page select the Up Arrow with the dot on top.

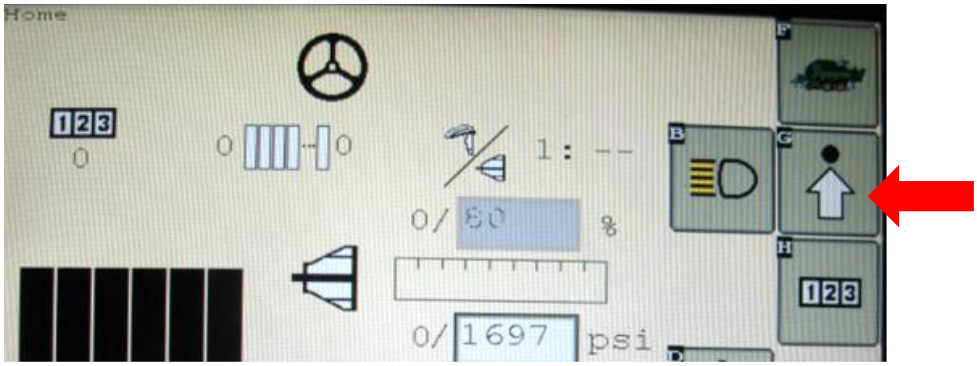

2. On the Machine Setup page that will appear, select soft key D (Page Right)

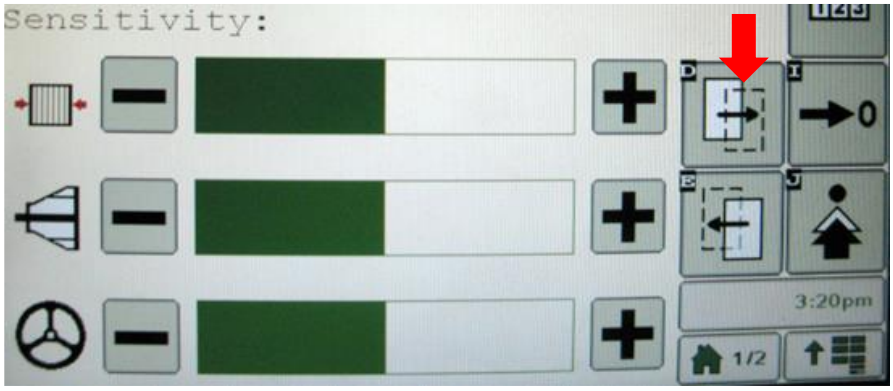

3. On the next page select the Harvest Tec option. The Check mark indicates that the system is now on.

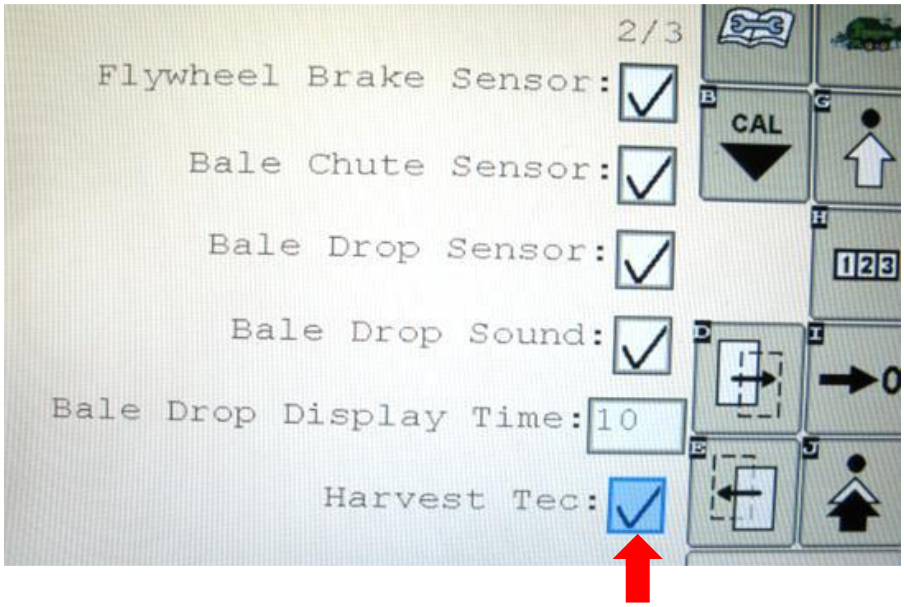

Baler Monitor Setup (continued)

2600 Series Monitor Baler run Screen Details

Harvest Tec information will display on the bottom of screen in the center

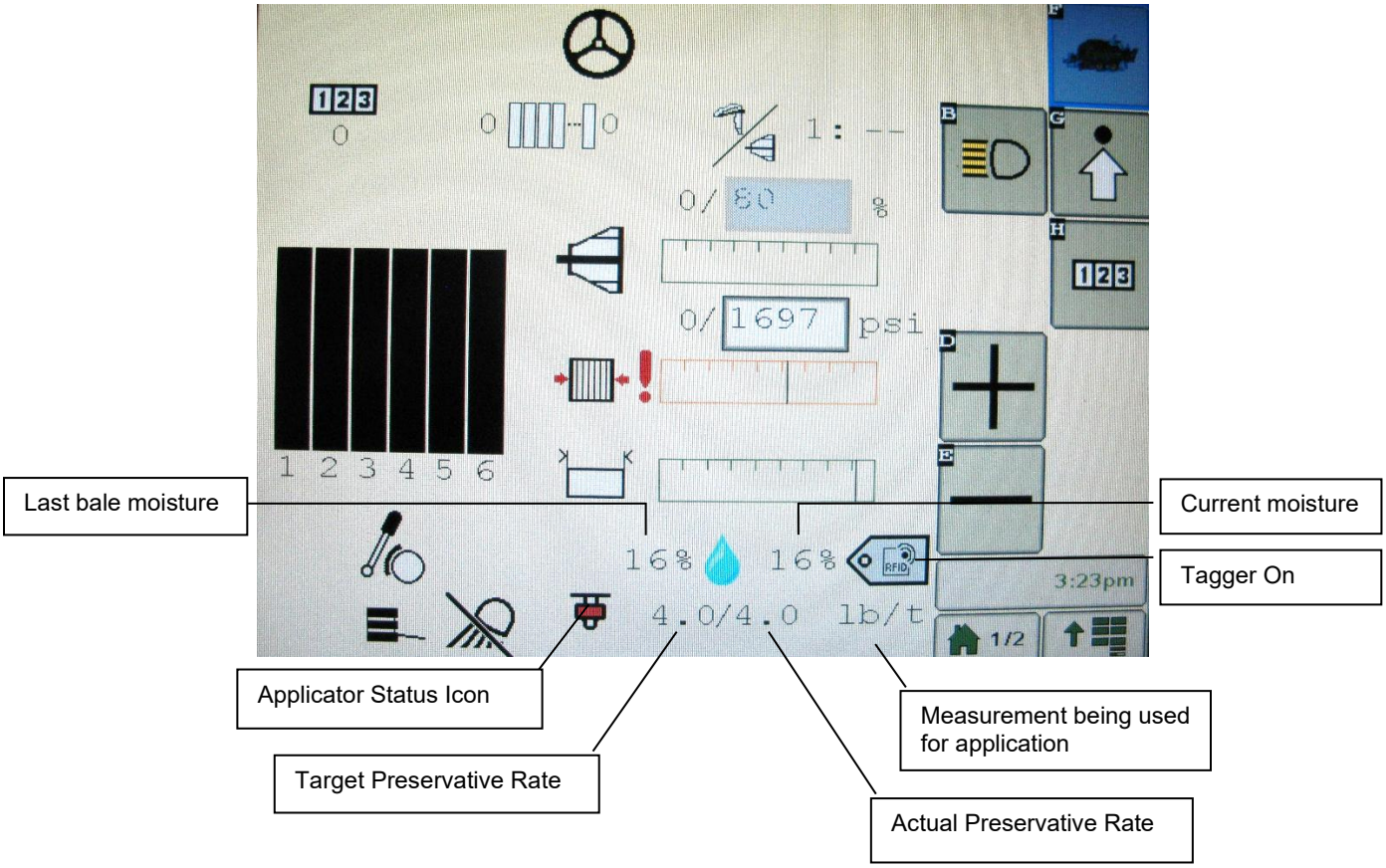

Stats Icon Descriptions

Applicator is not in a run mode.

Applicator is in Automatic or Manual Mode.

System is at End of Row as indicated by the Optional Hay Indicators (Crop-Eyes).

System is in Pause Mode from pressing the Pause button.

Baler Monitor Setup

GreenStar 4th Generation Arm Command Display

Display software version **8.10.2393-23 or later,** is required on the display to ensure compatibility. Earlier versions are not all compatible. This information can be found by selecting “Menu” in the lower right-hand corner of the display, select the third tab down labeled “System”, press “Software Manager”, then the “Version Information” tab and the software versions will be displayed (Figure 1).

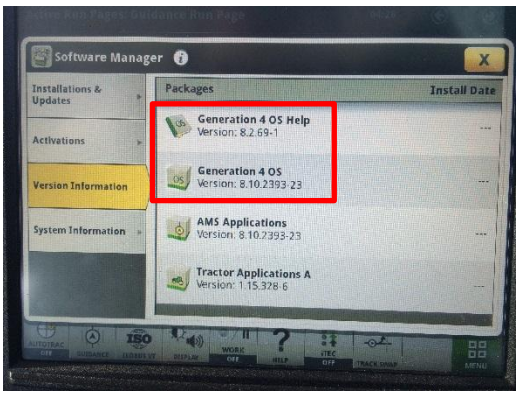

Figure 1

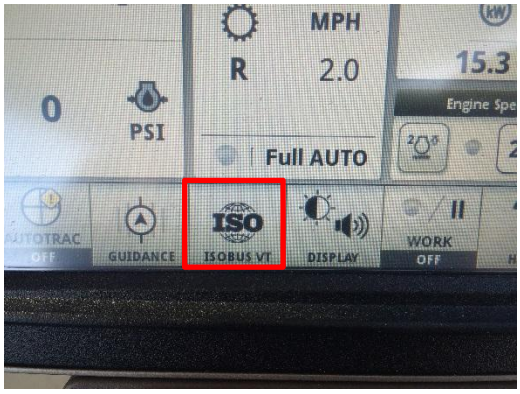

Figure 2

Once you have made sure the software version is at or above the recommended version, return to the tractor run screen. When on the run screen, there will be an ISO button (Figure 2) on the bottom toolbar. Pressing this will bring you into the “Connected ISOBUS Implements” page (Figure 3). If Harvest Tec is powered up correctly and active on the ISOBUS, the icon labeled “Forage, Harvest Tec, Inc.” will display. If the files are still loading you will see a loading status.

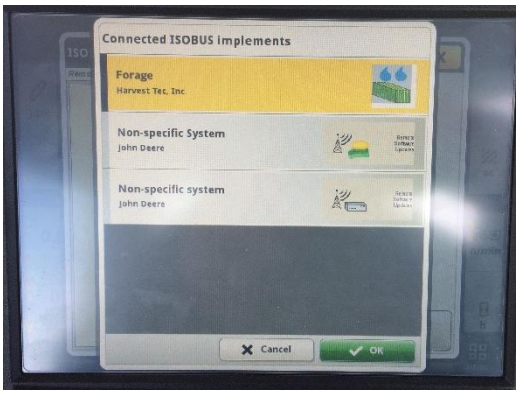

Figure 3

Figure 4

Once the files are loaded onto the display, you will receive a warning (Figure 5) to inform the operator that another device has been added onto the ISOBUS. This can be accepted and then selecting the Harvest Tec device in the ISOBUS menu will bring up the Harvest Tec system.

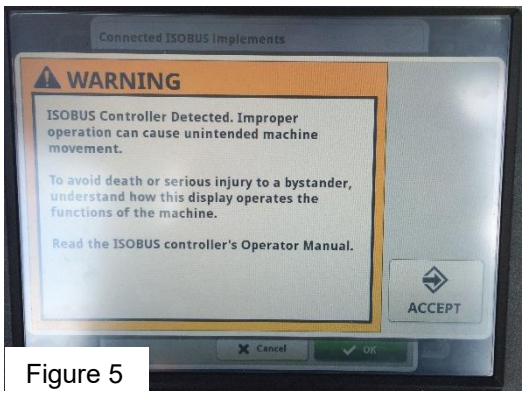

Figure 5

Baler Monitor Setup (continued)

When the Harvest Tec system is connected you can also access the applicator by following these screens:

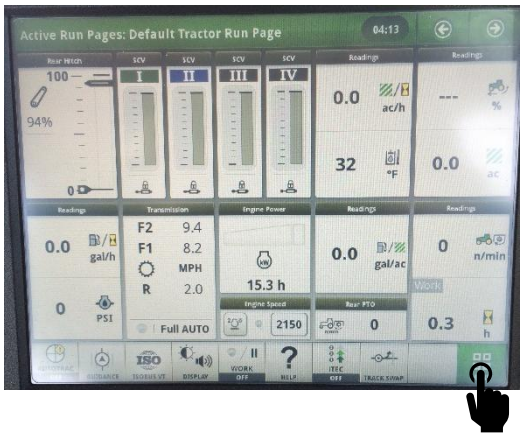

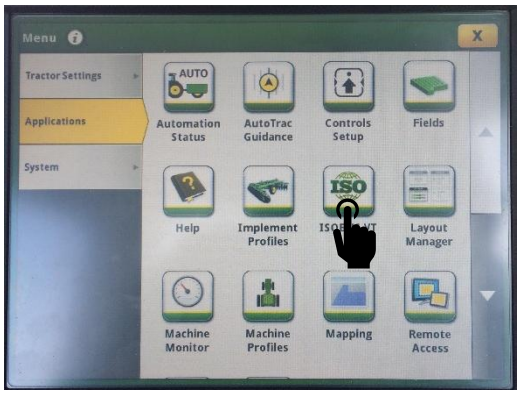

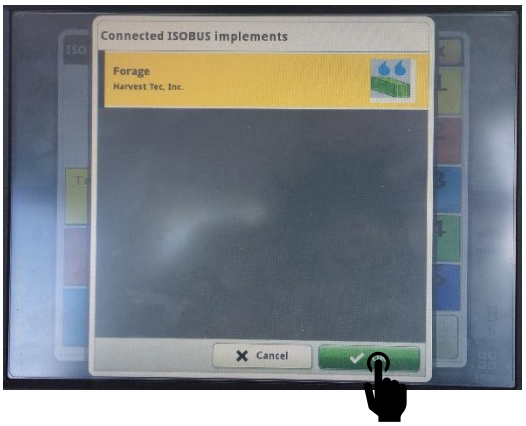

Wiring Diagram – 700 Series Large Square Balers

1. Connect the power harness (006-765IC) to the tractor battery (12 volt) using the red wire with fuse to the positive side and the black wire to the negative.
   A. **The power harness must be connected to the battery!**
      CONTACT HARVEST TEC BEFORE MODIFICATIONS.
      The unit will draw more amps than convenience outlets can handle. Any modifications of the power harness will void systems warranty
   B. **This unit will not function on positive ground tractors.**
   C. **If the unit loses power while operating it will not keep track of accumulated pounds of product used.**
2. The power harness on the tractor (006-765IC) will run from the tractor battery to the hitch. The power harness on the baler (006-765B2) will connect to the tractor power harness (006-765IC) at the hitch.
3. Connect the keyed power wire (006-765CPH) to a keyed power source on the tractor.
   The keyed power wire must connect to a keyed source or the unit will not power up correctly.
4. Attached the ISO Communication Module (006-6673) to the tractor power harness (006-765IC).
5. Attach the End of Bale (EOB) connection on baler harness (006-765B2) to the EOB Sensor (006-7401).
6. Attach the Solenoid Harness (006-3650-S1) to baler harness (006-765B2) and to the solenoids (002-2203F).
7. Attach the Flowmeter (006-4724A) to ISO Pump Module connection on pump plate assembly.
8. Attach the rubber molded connector on pump plate to the Pump (007-4120DE).
9. Attach star wheel (030-4642 U/UE) connection to ISO Pump Module on pump plate assembly.

System Wiring Diagram

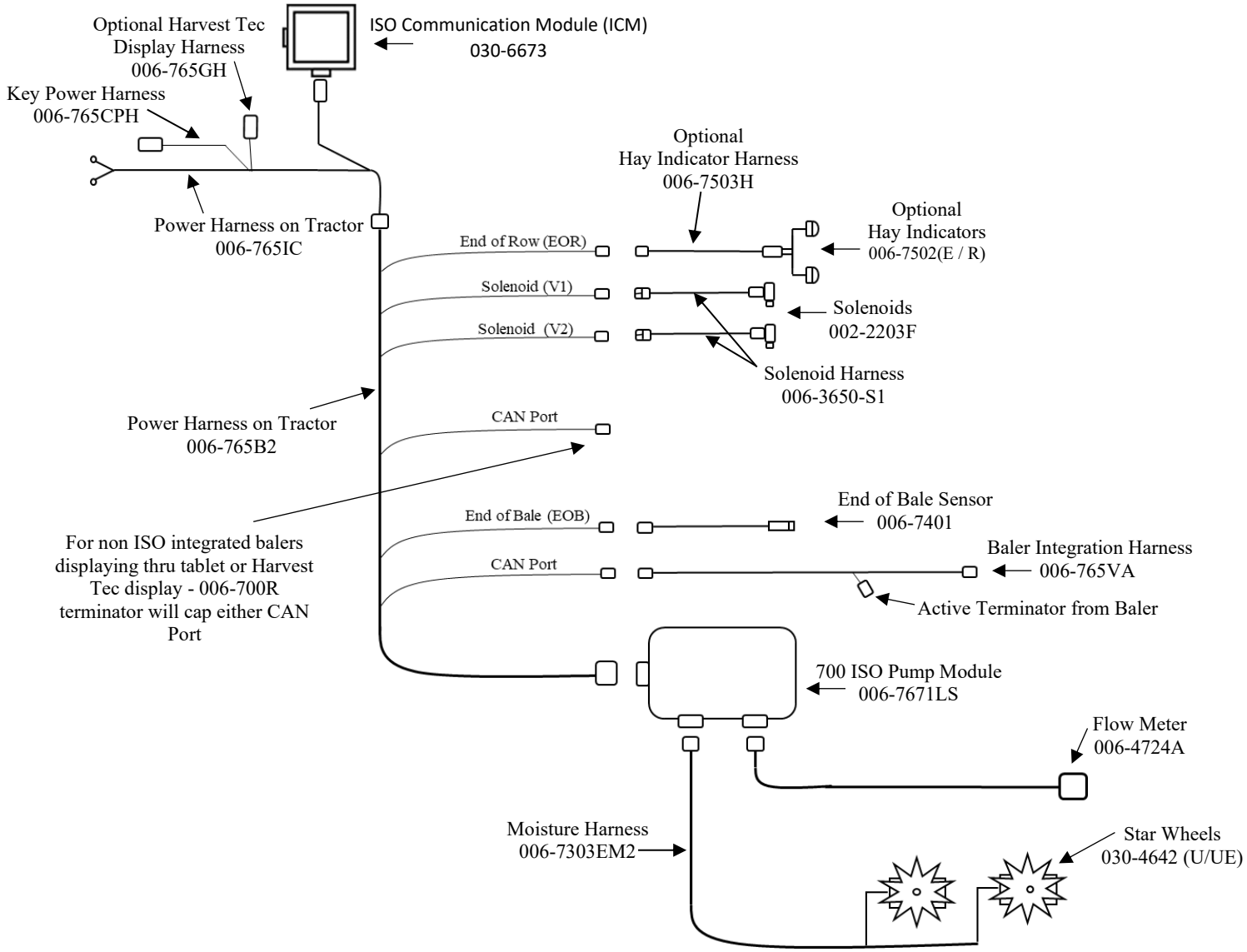

Pin Outs

Integrated Control Module (ICM) on Tractor Harness 006-765IC

(Deutsch Plug Number: DTM06-12SA)

Pin 1	Red	+12V from ECU
Pin 2	Purple	Signal Wire
Pin 3	Red/White	+12V CAN X
Pin 4	Black/White	Ground CAN X
Pin 5	Orange	CAN X Hi
Pin 6	Blue	CAN X Lo
Pin 7	Green	ISO CAN Lo
Pin 8	Yellow	ISO CAN Hi
Pin 9	White	GPS Expansion 1
Pin 10	Gray	GPS Expansion 2
Pin 11	Brown	GPS Expansion 3
Pin 12	Black	Ground from ECU

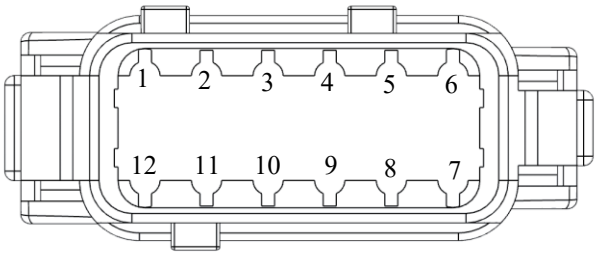

ISOBUS Plug on Tractor Harness 006-765IC

(Deutsch Plug Number: DT04-4P)

Pin 1	Red	+12V from ECU
Pin 2	Yellow	ISO CAN Hi
Pin 3	Green	ISO CAN Lo
Pin 4	Black	Ground from ECU

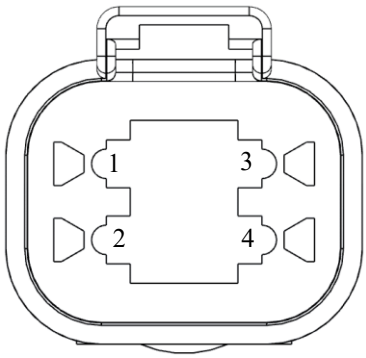

Power / Communication Tractor Harness 006-765IC at Baler Hitch

(Deutsch Plug Number: HDP24-24-18PN)

Pin 1	Not Used	----
Pin 2	Yellow	ISO CAN Hi
Pin 3	Green	ISO CAN Lo
Pin 4	Red	+12V Power to ECU
Pin 5	Black	Ground to ECU
Pin 6	Red	+12V From Battery
Pin 7	Not Used	----
Pin 8	Black	Ground From Battery
Pin 9	Not Used	----
Pin 10	Purple	Signal Wire
Pin 11	Red/White	+12V CAN X
Pin 12	Black/White	Ground CAN X
Pin 13	Orange	CAN X Hi
Pin 14	Blue	CAN X Lo
Pin 15	White	GPS Expansion 1
Pin 16	Gray	GPS Expansion 2
Pin 17	Brown	GPS Expansion 3
Pin 18	Not Used	----

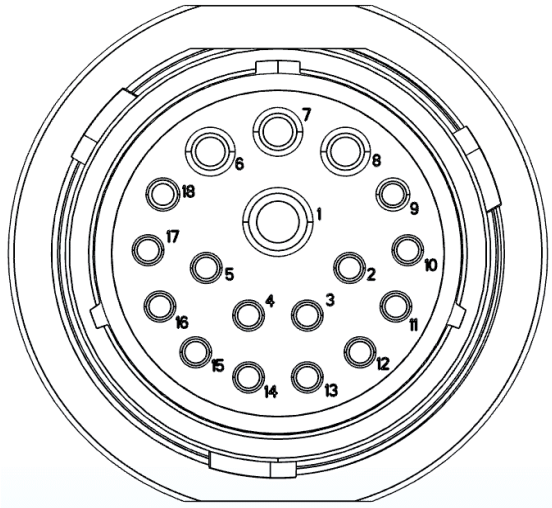

Power / Communication Baler Harness 006-765B2 at Baler Hitch IPM

(Deutsch Plug Number: HDP26-24-18SN)

Pin 1	Not Used	----
Pin 2	Yellow	ISO CAN Hi
Pin 3	Green	ISO CAN Lo
Pin 4	Red	+12V Power to ECU
Pin 5	Black	Ground to ECU
Pin 6	Red	+12V From Battery
Pin 7	Not Used	----
Pin 8	Black	Ground From Battery
Pin 9	Not Used	----
Pin 10	Not Used	----
Pin 11	Not Used	----
Pin 12	Not Used	----
Pin 13	Not Used	----
Pin 14	Not Used	----
Pin 15	Not Used	----
Pin 16	Not Used	----
Pin 17	Not Used	----
Pin 18	Not Used	----

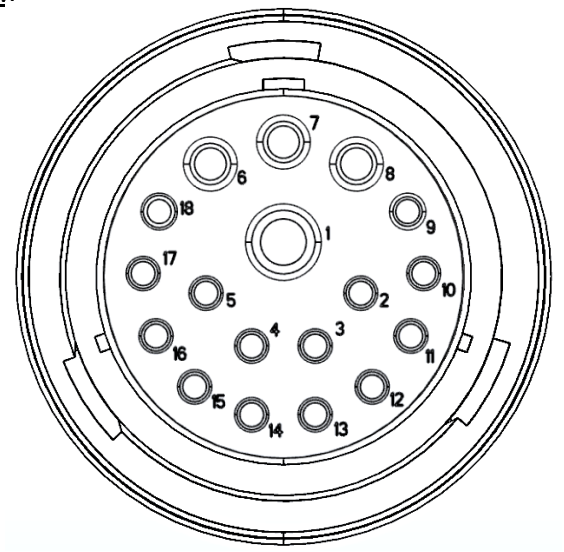

Power / Communication Baler Harness 006-765B2 at IPM Module

(Deutsch Plug Number: HDP24-24-18SN)

Pin 1	Not Used	----
Pin 2	Yellow	ISO CAN Hi
Pin 3	Green	ISO CAN Lo
Pin 4	Red	+12V Power to ECU
Pin 5	Black	Ground to ECU
Pin 6	Red	+12V From Battery
Pin 7	Not Used	----
Pin 8	Black	Ground From Battery
Pin 9	Not Used	----
Pin 10	Orange/White	+12V Power to EOR
Pin 11	Orange/Black	Ground to EOR
Pin 12	Purple/Green	EOR Signal
Pin 13	Blue/White	EOB Signal
Pin 14	Gray/Red	+12V Power to Solenoid 1
Pin 15	White/Black	Ground to Solenoid 1
Pin 16	Orange/Red	+12V Power to Solenoid 2
Pin 17	White/Black	Ground to Solenoid 2
Pin 18	Not Used	----

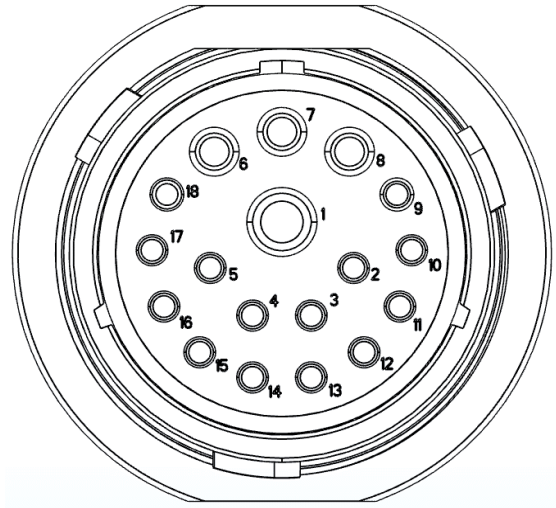

*IPM Module Whip Plug- Pin # 5 Not Used

Solenoid 1 Plug on Baler Harness 006-765B2

(Deutsch Plug Number: APTIV 12052641)

Pin B	Gray/Red	+12V to Solenoid 1
Pin A	White/Black	Ground to Solenoid 1

Solenoid 2 Plug on Baler Harness 006-765B2

(Deutsch Plug Number: APTIV 12052641)

Pin B	Orange/Red	+12V to Solenoid 2
Pin A	White/Black	Ground to Solenoid 2

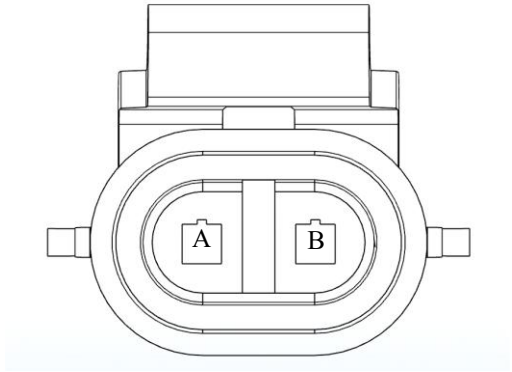

CAN / IDM on Baler Harness 006-765B2

(Deutsch Plug Number: DT06-4S)

Pin 1	Red	+12V to ECU
Pin 2	Yellow	ISO CAN Hi
Pin 3	Green	ISO CAN Lo
Pin 4	Black	Ground to ECU

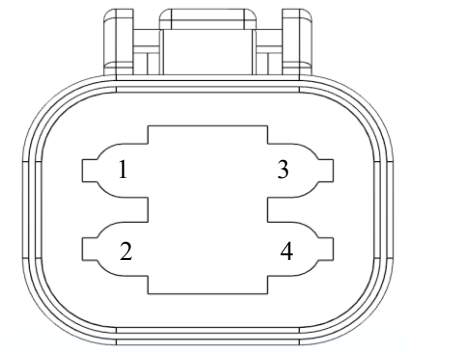

End of Bale Sensor Plug on Baler Harness 006-765B2

(Deutsch Plug Number: DT06-3S)

Pin 1	Orange/White	+12V to End of Bale Sensors
Pin 2	Orange/Black	Ground to End of Bale Sensors
Pin 3	Blue/White	Signal

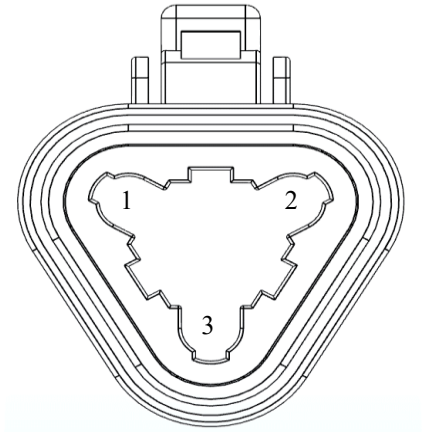

End of Row Sensors Plug on Baler Harness 006-765B2

(Deutsch Plug Number: DT06-3S)

Pin 1	Orange/White	+12V to End of Bale Sensors
Pin 2	Orange/Black	Ground to End of Bale Sensors
Pin 3	Blue/White	Signal

Integration Harness Plug on Baler Harness 006-765VA

(Plug: APTIV 12052848)

Pin A	Not Used	----
Pin B	Red	TBC Power
Pin C	Not Used	----
Pin D	Gray	TBC Ground
Pin E	Orange	CAN Hi
Pin F	Blue	CAN Lo

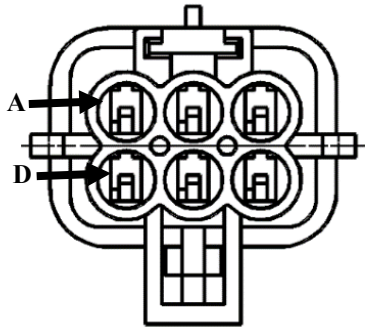

Pump Connection on 700 Controller Harness

(16 AWG Two-Wire Plug)

Pin 1	Red	Power to Pump
Pin 2	Black	Ground to Pump

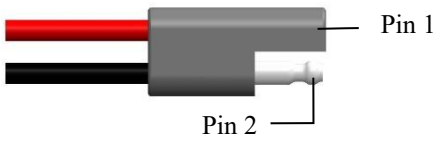

Harvest Tec LLC. Warranty and Liability Agreement

Harvest Tec, LLC. will repair or replace components that are found to be defective within 12 months from the date of manufacture. Under no circumstances does this warranty cover any components which in the opinion of Harvest Tec, LLC. have been subjected to negligent use, misuse, alteration, accident, or if repairs have been made with parts other than those manufactured and obtainable from Harvest Tec, LLC.

Our obligation under this warranty is limited to repairing or replacing free of charge to the original purchaser any part that in our judgment shows evidence of defective or improper workmanship, provided the part is returned to Harvest Tec, LLC. within 30 days of the failure. If it is determined that a non-Harvest Tec manufactured product has been used inside the Harvest Tec applicator system where the failure occurred, then Harvest Tec reserves the right to deny the warranty request at their discretion. Parts must be returned through the selling dealer and distributor, transportation charges prepaid.

This warranty shall not be interpreted to render Harvest Tec, LLC. liable for injury or damages of any kind, direct, consequential, or contingent, to persons or property. Furthermore, this warranty does not extend to loss of crop, losses caused by delays or any expense prospective profits or for any other reason. Harvest Tec, LLC. shall not be liable for any recovery greater in amount than the cost or repair of defects in workmanship.

There are no warranties, either expressed or implied, of merchantability or fitness for particular purpose intended or fitness for any other reason. This warranty cannot guarantee that existing conditions beyond the control of Harvest Tec, LLC. will not affect our ability to obtain materials or manufacture necessary replacement parts.

Harvest Tec, LLC. reserves the right to make design changes, improve design, or change specifications, at any time without any contingent obligation to purchasers of machines and parts previously sold.

Revised 1/24

HARVEST TEC, LLC.
P.O. BOX 63
2821 HARVEY STREET
HUDSON, WI 54016 USA
PHONE: 715-386-9100
FAX: 715-381-1792
Email: info@harvesttec.com