Installation Manual

Model 796BB

115 Gallon Preservative Applicator

for CNH ISOBUS Large Square Balers

HarvestTec®

EST. 1976

796BB-26-INST
9/26

Table of Contents

	Page
Introduction	**3**
System Overview	**4**
Tank and Tank Saddle	**5-6**
Pump Plate and Handrail Mounting	**7-8**
Optional Camera/Light Bracket	7
Pump Plate Breakdown	8
Drain/Fill Line	**9-10**
Parts Bag Breakdowns and Hoses	10
Spray Shields	**11-12**
4532C, 4533C & 4534C Installation Kits	11
4535C & 4536C Installation Kits	12
Wind Guard Kits	**13-14**
For 3x3 Baler	13
For 3x4 Baler	14
Solenoids and Hose Routing	**15-16**
Solenoid Breakdown	16
Main Wire Harness and Controls	**17-18**
Star Wheel Moisture Sensors	**19-21**
Moisture Kit Breakdown	20
End of Bale Sensor (EOB)	**22**
Tractor Setup	**23**
Display Options	**24-31**
Optional HT Display Kit	25
Optional Android Tablet Display Kit	26
Optional iPad Mini Display Kit	26
Optional ISO Display Adapter	27
Optional Baler VT Integration	28-31
Wiring Diagram	**32**
Pin Outs	**33-35**
Warranty	**36**

Introduction

Thank you for purchasing the 700 Series Preservative Applicator. This applicator system has been designed to be operated through a number of different displays and tablets using the Precision Baling App. These include the Harvest Tec VT display, the baler's ISOBUS and display on the baler monitor (if compatible/applicable), or iOS/Android Tablet (not included).

The 700 Series Preservative Applicator System is designed to apply Baler's Choice buffered propionic acid (made by Harvest Tec) to the forage crop as it is baled. **Use of alternative products may cause system complications and voids Harvest Tec manufacturer's warranty.** Failure to follow instructions can result in personal injury or equipment malfunction. If you need parts for the system, please view the Parts Breakdown within this manual and contact your local authorized dealer to order replacement parts.

Right and Left sides are determined by facing in the direction of forward travel.

System Requirements

CNH Baler Monitor must have version 4.2.0 or higher

Made for Harvest Tec Display, Baler Integration, or Tablet
For best performance ensure all displays are running the latest operating system.

System Overview

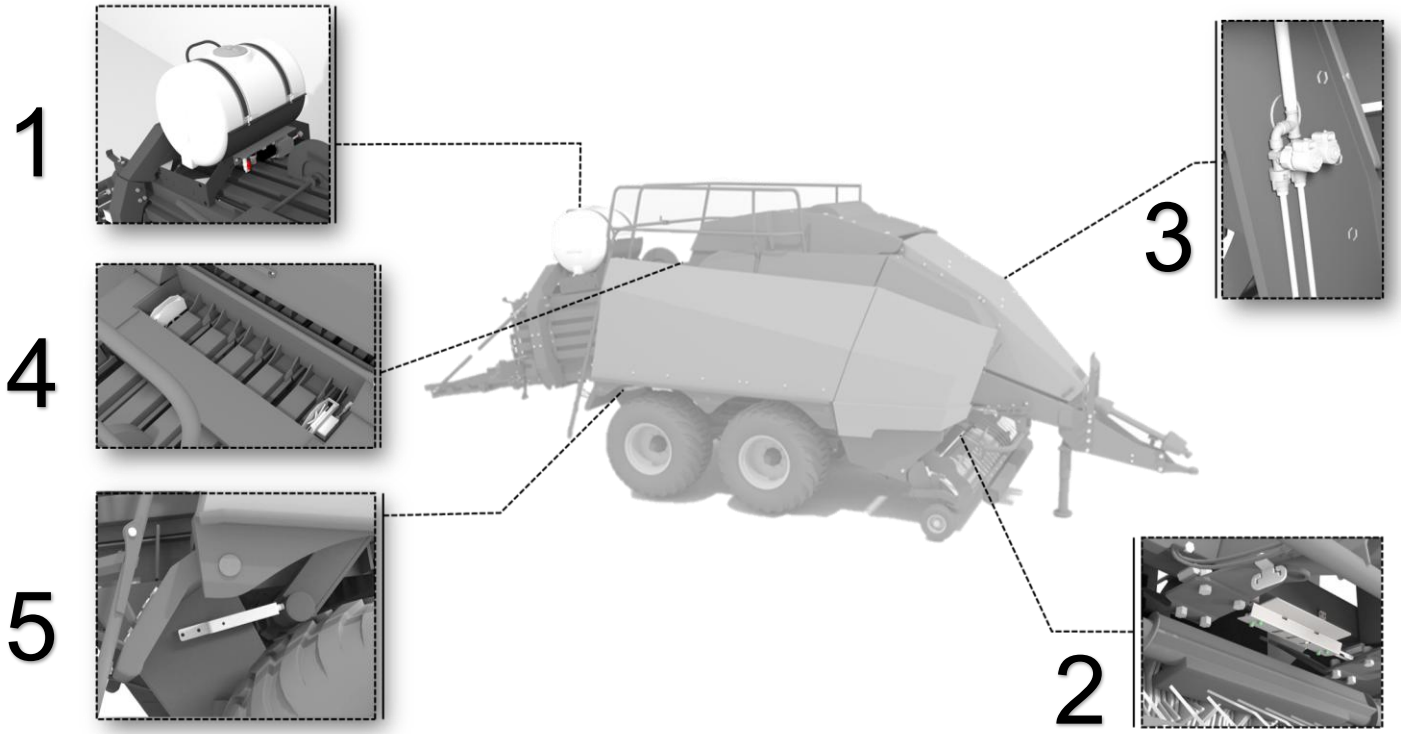

The 700 series applicator system consists of five main areas of installation, these include:

1) Tank Mounting Installation
2) Spray Shield Installation
3) Solenoid Installation
4) Star Wheel Installation
5) End of Bale Installation

Tank Installation and Pump Plate
This will mount on the bale chute towards the rear of the baler. All mounting and parts should be verified prior to beginning installation. Follow *Installation of Pump Manifold and Saddle* section for step-by-step instruction.

Spray Shield Installation
The spray shield assembly is designed to spray the hay evenly as the baler picks it up. This holds the tips and is connected to plumbing to apply preservative as precisely as possible. Follow the *Spray Shield Installation* section for sketches of the spray shield nozzle holders and step-by-step instruction.

Solenoid Installation
The dual solenoid setup is to be mounted as close to the spray shield as possible. This will provide the best result to ensure the proper output of preservative is applied through the nozzles. View *Spray Shield installation* section for instructions of solenoid mounting.

Star Wheel Installation
This is the moisture setup for the applicator system, installation will be done on top of the bale chamber so the star wheels can make sufficient contact with the bale. Follow *Star Wheel Mounting* sections for step-by-step instruction.

End of Bale Installation
The end of bale sensor determines the position of the needles on the baler. When the needles cycle the sensor communicates this information to the 700 series. Installation of this sensor is required for use with the Harvest Tec Virtual Terminal. Follow *End of Bale Sensor Installation* section for step-by-step guide.

Tank and Tank Saddle

Tank Saddle Kit 030-0491BB-TK

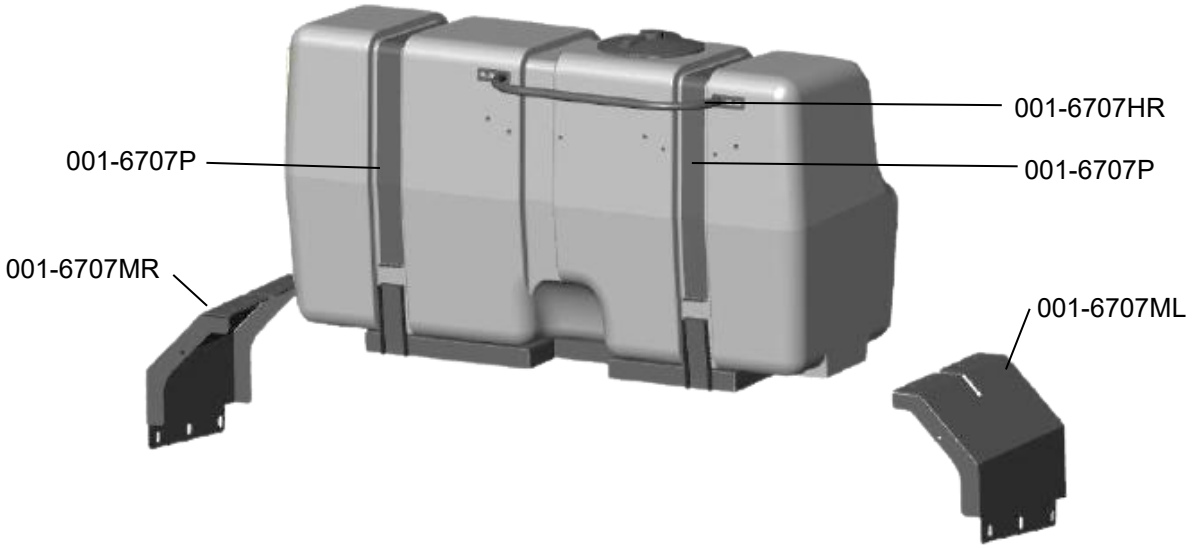

1. Remove the two tank straps (001-6707P) by removing all eight 3/8” hex nuts.
2. Lift the tank (005-9218) away from the saddle (001-6707N) and place the tank on a smooth flat surface.
3. Install the pump supply elbow (003-EL3412) on the bottom of the tank.
4. Install the drain/fill elbow (003-EL3434) on the side of the tank below the sight gauge.

Parts Breakdown

030-0491BB-TK Tank Saddle Kit

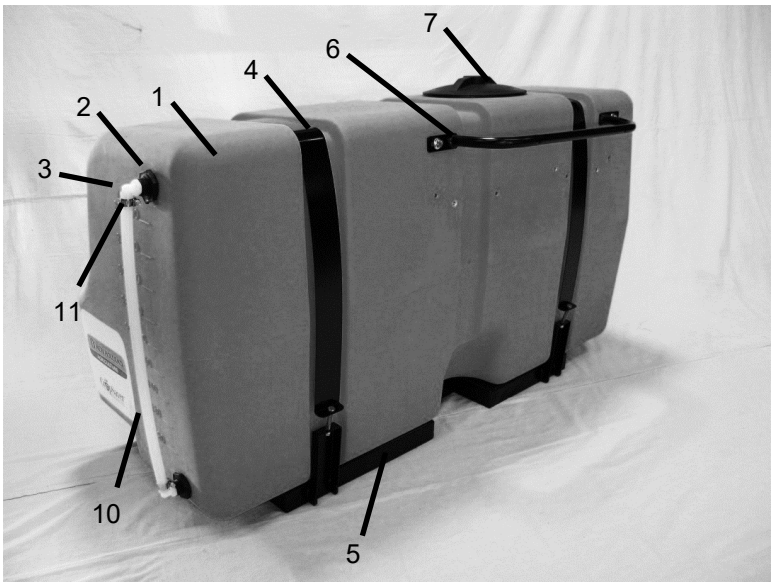

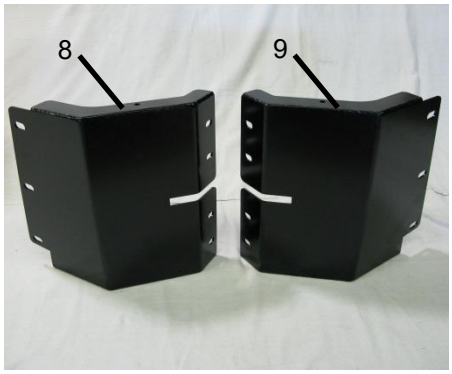

Ref	Description	Part Number	Qty	Ref	Description	Part Number	Qty
1	Tank	005-9218	1	9	Right saddle leg	001-6707MR	1
2	1/2" tank fitting	005-9104	2	10	1/2" hose	002-9001	2
3	Elbow	003-EL1212	2	11	Hose Clamp	003-9003	2
4	Tank straps	001-6707P	2	**NP**	**Not Pictured:**		
5	Tank saddle	001-6707N	1	NP	Elbow	003-EL3434	1
6	Handrail	001-6707HR	1	NP	Elbow	003-EL3412	1
7	Tank lid	005-9022H	1	NP	3/4” tank fitting	005-9100	2
8	Left saddle leg	001-6707ML	1	Complete Replacement Tank		030-9218	

Tank Saddle Mounting

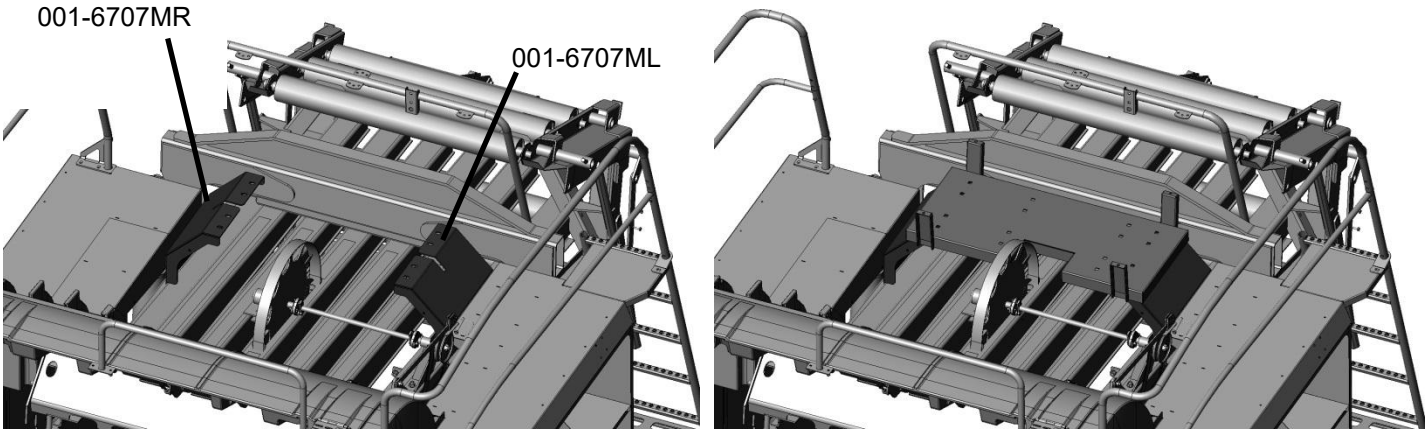

1. Install the two saddle legs (001-6707MR & 001-6707ML) on to the top of the baler chute as shown.
2. Secure the two legs with six (three per side) 1/2” x 1-3/4” carriage bolts, flats washers, locks washers, and hex nuts. The six holes will be already punched out of the baler frame and will line up with the saddle legs. Make sure the bolt head is in the chamber.
3. Install the tank saddle (001-6707N) on top of the saddle legs.
4. Secure the tank saddle to the saddle legs using eight (four per side) 1/2" x 1-3/4” carriage bolts, flat washers, lock washers, and hex nuts. Use the outside set of holes for four-foot-wide balers and the inside set of holes for three-foot-wide balers.
5. Make sure the carriage bolt heads are on top of the saddle and the bolt points towards the bale chamber.
6. Install the tank and secure with the straps and hardware removed from before. The tank straps will need to be secured with a double nut.

New Holland 330+ & Case IH LB334XL Balers

The tank leg mounting location may need to be moved toward the back of the bale chute with some baler models NH330+ and Case LB334XL to allow for tank clearance. Move the location back of the baler 6” (151.5mm) and drill extra hole (below)

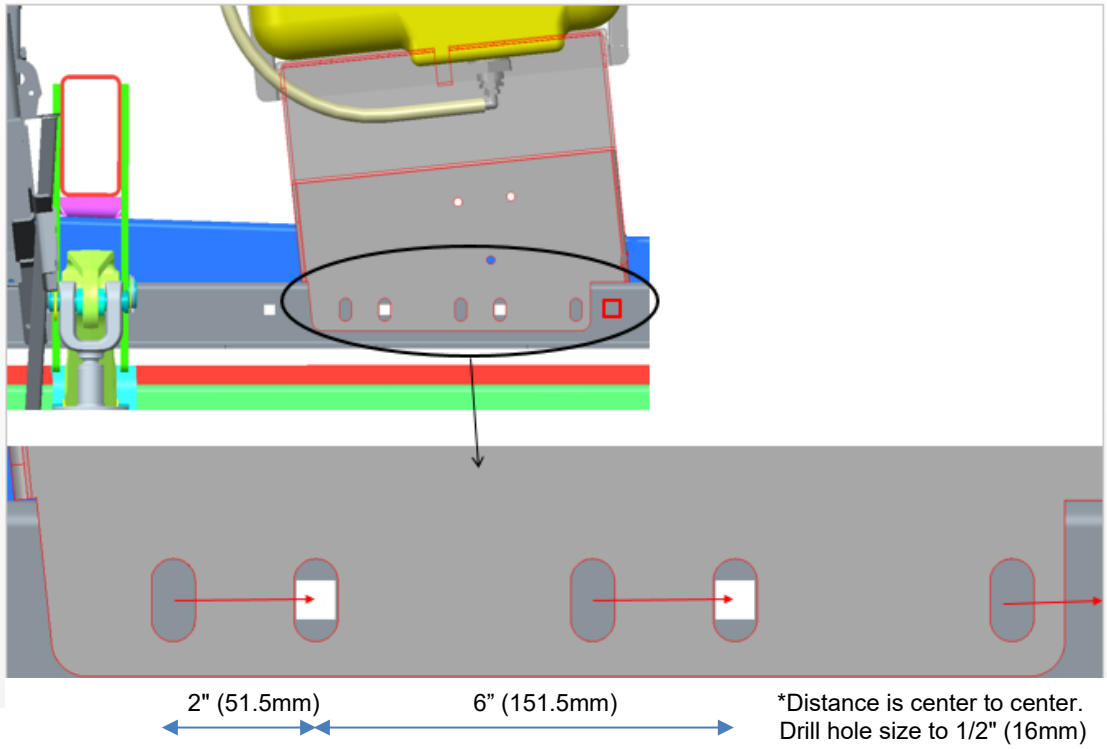

Pump Plate and Hand Rail Mounting
(PMP-7636SMT)

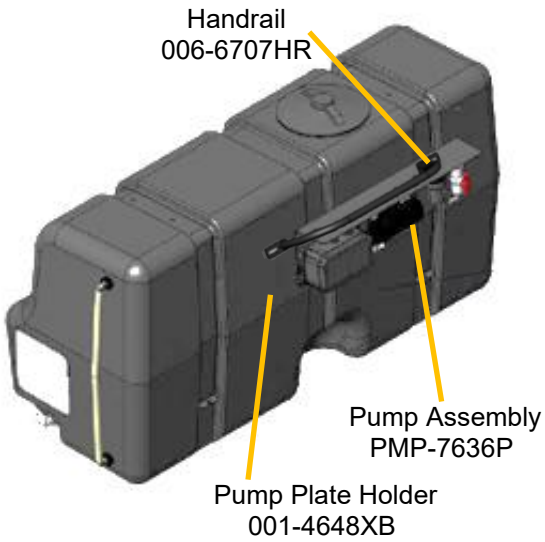

1. Attach handrail (001-6707HR) to tank with two 3/8” x 3/4” flange bolts.
2. Locate IPM control (006-7671LS) and attach to pump plate with #10 x 3/4" flat head machine screws. Choose fittings and install them into valve and pump discharge.
3. Attach pump plate holder (001-4648XB) to tank, just below the handrail with two 3/8” x 3/4" flange bolts.
4. Attach pump plate assembly to the pump holder on tank with 3/8” hardware.
5. Connect 1/2" hose between elbow fitting on bottom of tank and valve on pump plate. Secure with supplied hose clamps.

The pump head must be pointing down. Failure to mount the pump plate assembly in this specified direction will void all warranty of the IPM, flowmeter and pump

Optional Rear Camera/Light Brackets Kit 030-6707BLK
(not included with all applicator kits)

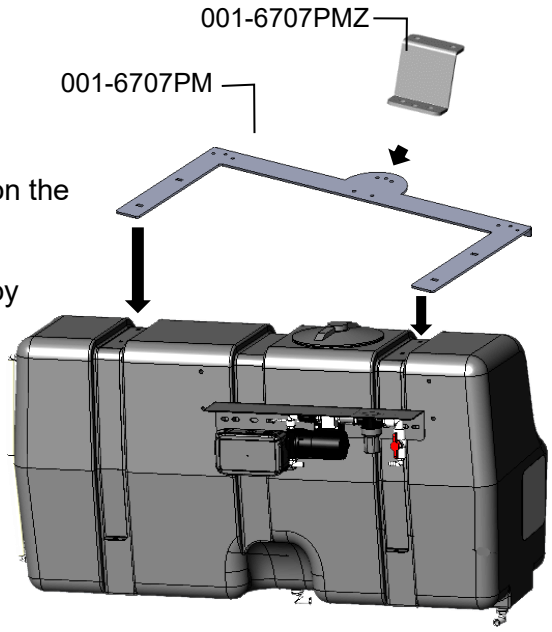

There is now an optional rear light extension bracket available for the NH330+ & NH340+ and LB334XL & 434XL baler models. To reposition the lights, camera, and beacon light to the back of the preservative tank.

Install the camera/light bracket (001-6707PM) as shown on the right by lining up two holes in the arms of the bracket with the holes on the tank straps. Using the supplied elevator bolts install the bolt with the head on the tank side with threads pointing upward.

Install the camera mounting brackets (001-6707PMZ) to the camera light bracket as shown on right. Move the lights and camera as needed using the light extension harness (006-7303LTX).

Contact Harvest Tec for ordering Complete Kit 030-6707BLK.
Note:
The straps will need to be loosened to allow room for placement of the bolts. Retighten after bolts are installed.

Optional Rear Camera/Light Brackets Kit 030-6707BLK

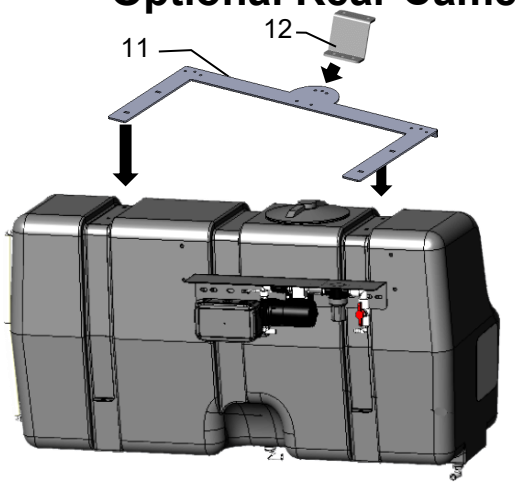

Ref	Description	Part Number	Qty
11	Camera/ Light Bracket	001-6707PM	1
12	Camera Mount Bracket	001-6707PMZ	1
NP	Light Extension Cable- 2’	006-7303LTX	1
	Complete Camera/Light Bracket Assembly Kit	030-6707BLK	

Parts Breakdown for Pump Assembly

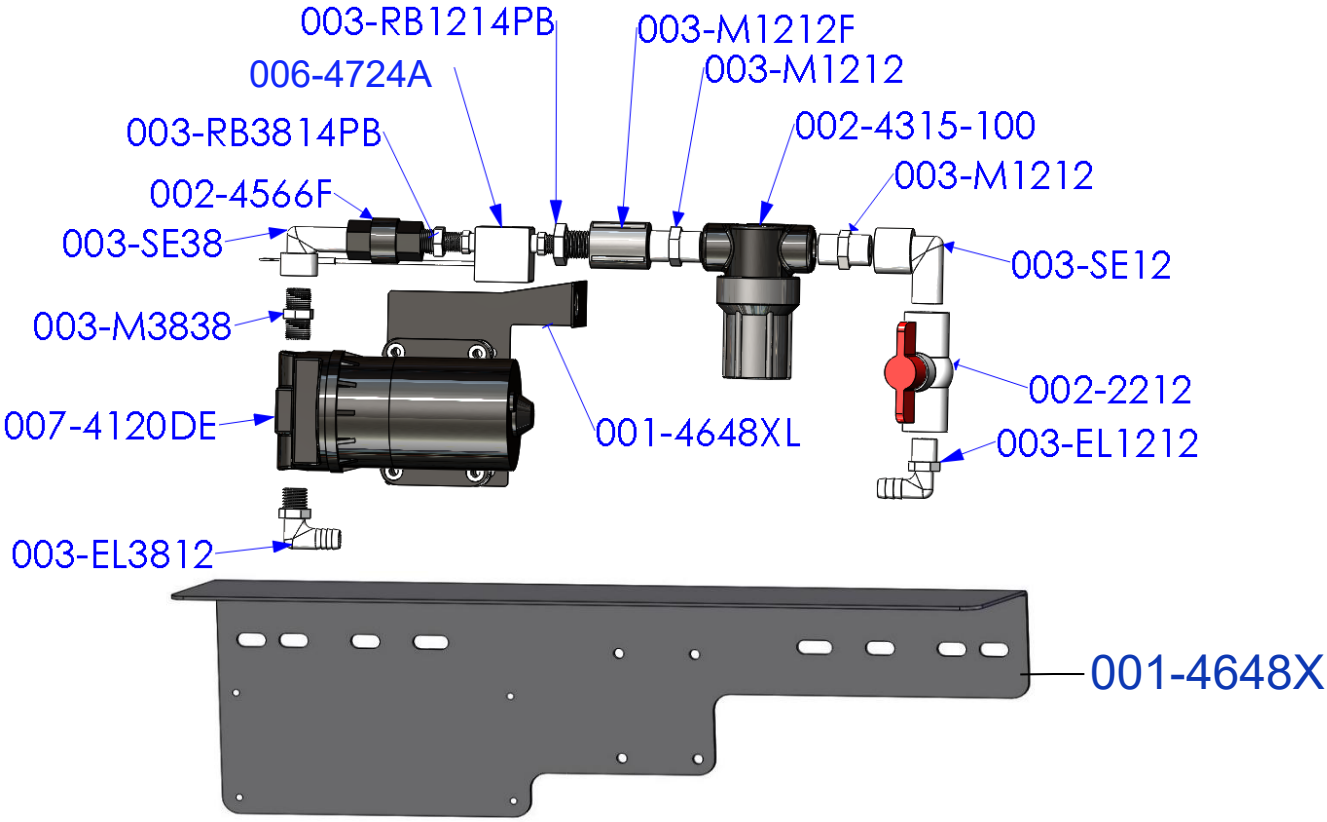

Part#	Description	Qty	Part#	Description	Qty
003-EL3812	3/8”MPT X 1/2"HB Elbow	1	003-M1212	1/2" Union	2
007-4120DE	700/300 Series Pump	1	002-4315-100	1/2" Line Strainer-100 Mesh	1
003-M3838	3/8” x 3/8” Union	1	003-SE12	1/2" Street Elbow	1
003-SE38	3/8” Street Elbow	1	002-2212	1/2" Ball Valve	1
002-4566F	3/8” Check Valve	1	003-EL1212	1/2"MPT x 1/2"HB	1
003-RB3814PB	RB 3/8” x 1/4” Reducer	1	001-4648XL	300 Pump Support	1
006-4724A	Flow Meter-Deutsch Plug	1	001-4648X	Pump Plate Mount	1
003-RB1214PB	RB 1/2" x 1/4" Reducer	1	003-A1212*	1/2" MPTx1/2”HB(Not Pictured)	1
003-M1212F	1/2" Coupler	1	003-A3812*	3/8" MPTx1/2”HB(Not Pictured)	1

*Note: Due to alternative baler designs, elbow 003-EL3812 can be replaced by straight fitting 003-A3812. Elbow 003-EL1212 can also be replaced by straight fitting 003-A1212. Both straight fittings are included.

Filter Bowl Replacement Parts

002-4315F Filter Bowl
002-4315D Filter Bowl Gasket
002-4315A Replacement Screen-100 Mesh
002-4315B Replacement Screen- 80 Mesh

Pump Plate Mounting – PMP-7636SMT
001-4648XB Pump Plate Adapter
Pump Plate Mounting – PMP-7636MMT
001-4648XB Pump Plate Adapter
001-6707FU Pump Plate Holder (qty 2 needed)
UHD Pump Plate Mounting – PMP-7636UMT
001-4648U Remote Pump Plate Mount (qty 2 needed)

Completed Assembly – PMP-7636P

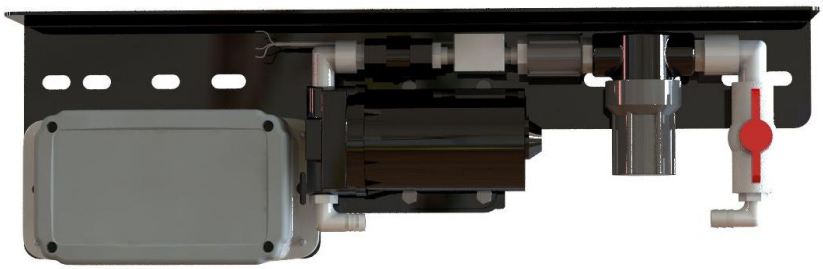

Drain/Fill Kit (030-0493DFK)

1. Locate Parts Bag 1
2. Thread 3/4” elbow fitting into end of tank.
3. Run hose from the elbow down the frame to the bottom of the baler.
4. Drill 1/4” (7mm) holes to accept the valve holder bracket and use 5/16” x 1” self-tapping screws.
5. Connect valve assembly to other end of hose. Place hose clamps on both ends.
6. Secure hose to frame using cable locks.
7. Install supplied safety decals (DCL-8001 & DCL-8005) next to the ball valve assembly.

Parts Bags Breakdowns

PBA-1

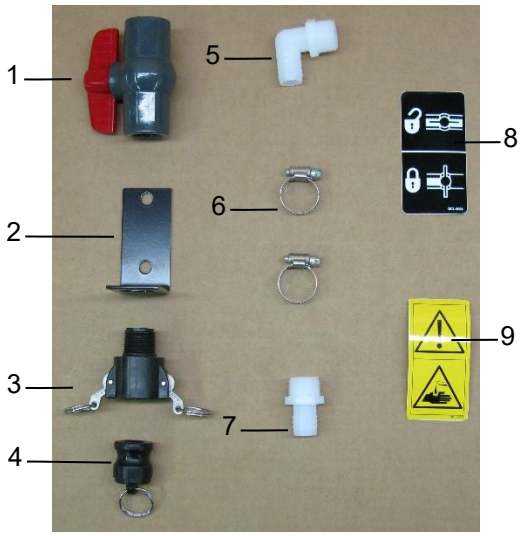

Ref	Description	Part #	Qty
1	3/4" Ball Valve	002-2200	1
2	Valve Holder	001-6702H	1
3	Female Coupler	002-2204A	1
4	Male Shut-Off Plug	002-2205G	1
5	3/4” x 3/4" Elbow	003-EL3434	1
6	#10 Hose Clamp	003-9004	2
7	3/4" x 3/4" Straight Fitting	003-A3434	1

Complete Drain Fill Kit 030-0493DFK
(Includes 3/4" tubing below)

PBP-16

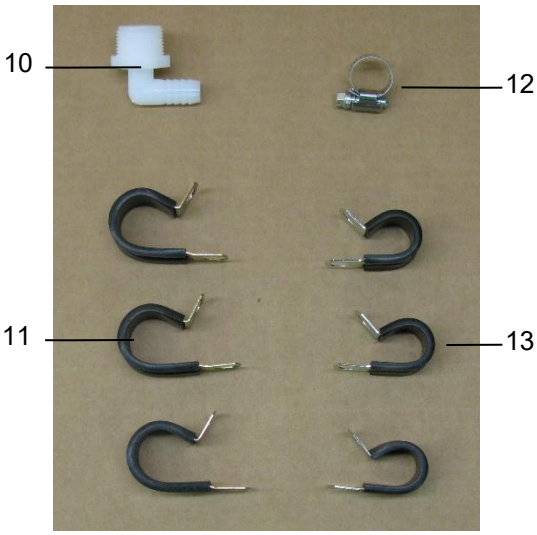

Ref	Description	Part #	Qty
8	Valve Decal	DCL-8004	1
9	Hazard Decal	DCL-8001	1
10	3/4" x 1/2" Elbow	003-EL3412	1
11	3/4" Jiffy Clip	008-9010	3
12	#6 Hose Clamp	003-9003	1
13	Small Jiffy Clip	008-9009	3

Hoses

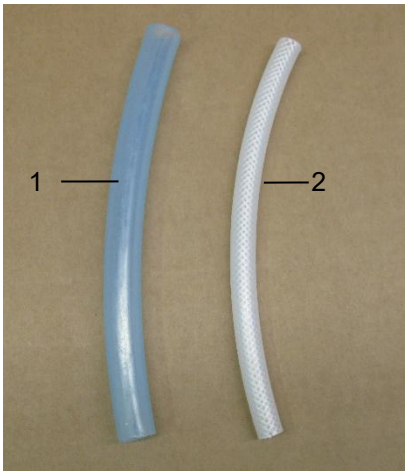

Ref	Description	Part#	Qty
1	1/2” Hose (Tank to Solenoid)	002-9001	30’
2	1/4" Hose (Solenoid to Tips)	002-9016	5’
NP	3/4" Hose (Drain/Fill Line)	002-9002	10’

Spray Shields The spray shield assembly is designed to spray the hay evenly as the baler picks it up. A sketch of the spray shield nozzle holder and installation instructions are shown below.

Installation Kit 4532C, 4533C & 4534C

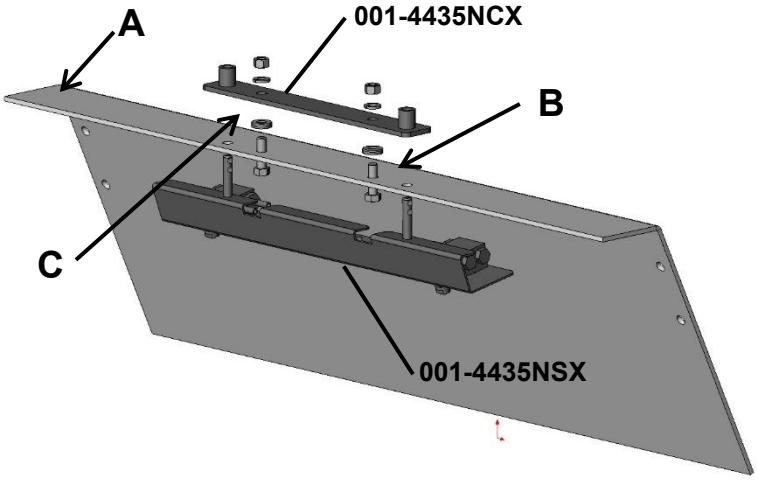

1. Locate the flat steel directly above the stuffer forks **(A).**
2. Center and align spray shield holder (001-4435NCX) to the flat steel.
3. Using the shield holder (001-4435NCX) as a template clamp the holder to the baler, mark the four holes and drill them to 7/16” (9mm) diameter **(B).**
4. Attach the spray shield holder (001-4435NCX) to the baler through the two center holes using the two 3/8” x 1-1/4” hex bolts, six flat washers, two lock washers, and two hex nuts. Six washers (three per side) may need to go between the baler and the spray shield holder **(C).**
5. Install the spray shield (001-4435NSX) to the holder and secure by using two lynch pins. Remove washers if necessary but allow for a tight fit **(C).**

4532C, 4533C & 4534C Installation Kit

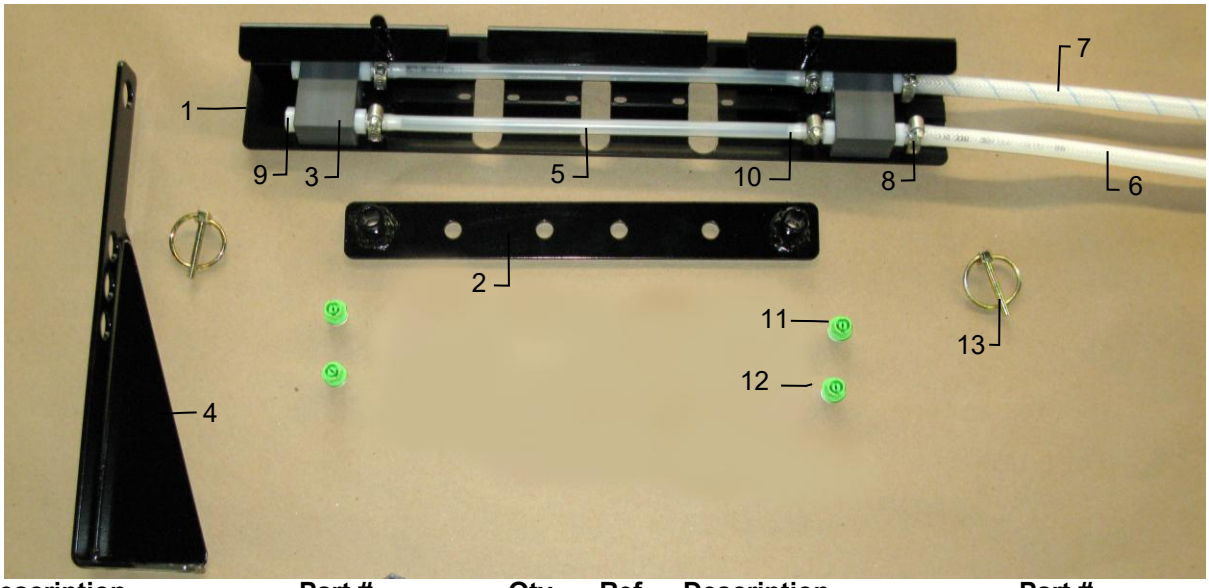

Ref	Description	Part #	Qty	Ref	Description	Part #	Qty
1	Spray Shield	001-4435NSX	1	8	Mini Hose Clamp	003-9002	8
2	Spray Shield Holder	001-4435NCX	1	9	1/4” Hex Plug	003-F14	2
3	Spray Manifold Block	001-4435NSB	2	10	1/4” x 1/4” Straight Fitting	003-A1414	8
4	End of Bale Bracket	001-4648	1	11	1/4” NPT Tip	004-T8008-PT	2
5	1/4” EVA Tubing	002-9006	2	12	1/4” NPT Tip	004-T8004-PT	2
6	1/4” Braided Hose	002-9016	4	13	3/16” Lynch Pin	008-4576	2
7	1/4” Braided Hose–Blue	002-9016B	4	NP	Rubber Washer	004-1207W	2
				NP	Female Quick Connect	004-1207H	2

*Tip colors subject to change

Complete Installation Kit (includes 2 tank saddle leg extensions 001-6707MX)	**030-4532C**
Complete Installation Kit	**030-4533C**
Complete Installation Kit	**030-4534C**

Spray Shields (continued)

Installation Kit 4535C & 4536C

1. Locate the baler cross member directly above the rotor. **(A)**
2. Locate the four pre-drilled holes on the cross member. **(B)**
3. Install spray shield holder (001-4435NC) to baler using three 5/16” x 1” bolts, lock washers, hex nuts.
4. Install the spray shield (001-4435NSX) to the the shield holder (001-4435NC) and secure with supplied lynch pins.

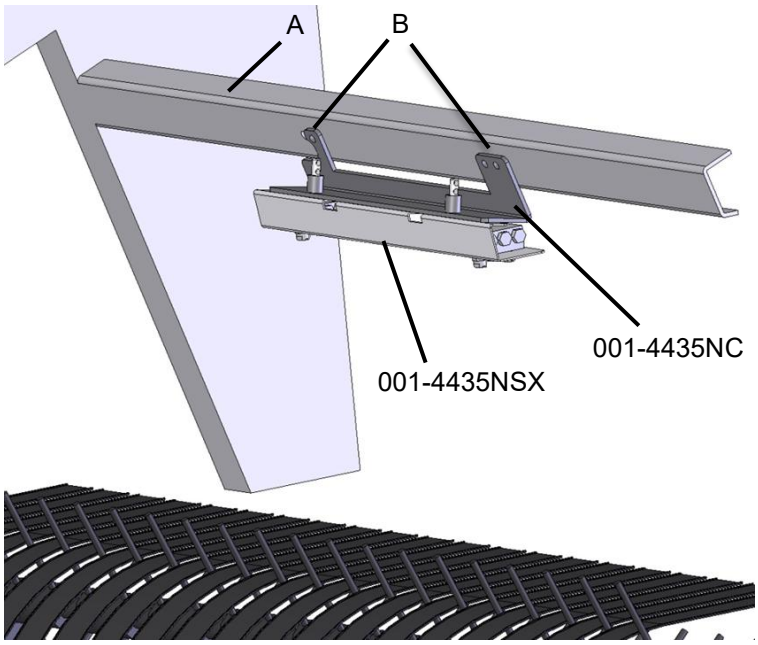

4535C & 4536C Installation Kit

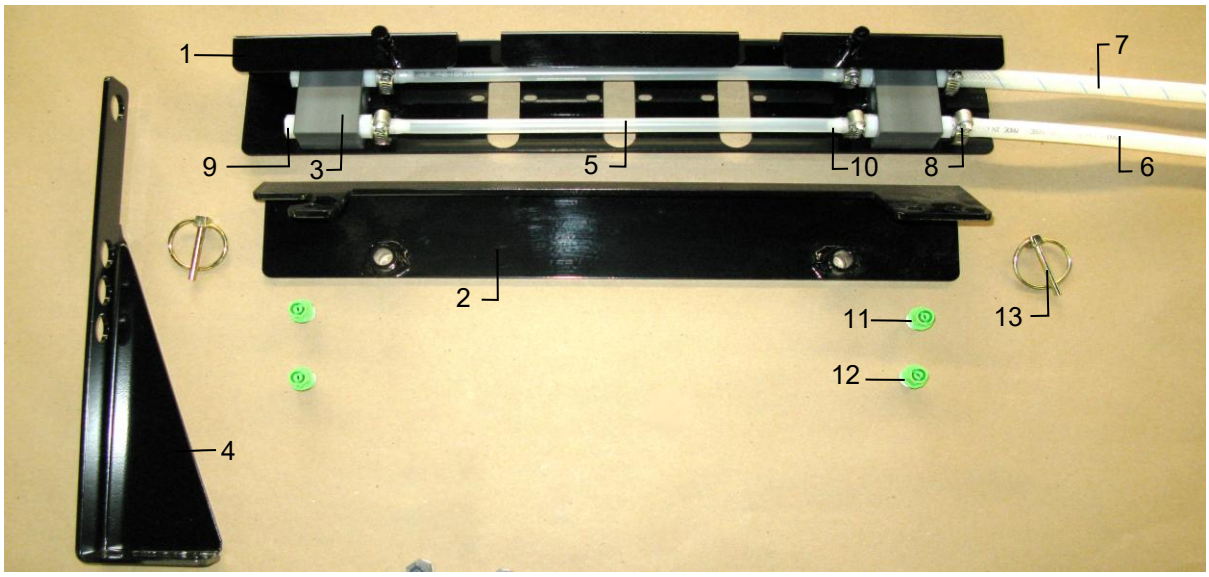

Ref	Description	Part #	Qty	Ref	Description	Part #	Qty
1	Spray Shield	001-4435NSX	1	8	Mini Hose Clamp	003-9002	8
2	Spray Shield Holder	001-4435NC	1	9	1/4” Hex Plug	003-F14	2
3	Spray Manifold Block	001-4435NSB	2	10	1/4” x 1/4” Straight Fitting	003-A1414	8
4	End of Bale Bracket	001-4648	1	11	1/4” NPT Tip	004-T8008-PT	2
5	1/4” EVA Tubing	002-9006	2	12	1/4” NPT Tip	004-T8004-PT	2
6	1/4” Braided Hose	002-9016	4	13	3/16” Lynch Pin	008-4576	2
7	1/4” Braided Hose–Blue	002-9016B	4	NP	Rubber Washer	004-1207W	2
				NP	Female Quick Connect	004-1207H	2

Complete Installation Kit **030-4535C**
Complete Installation Kit **030-4536C**

*tip colors subject to change

Wind Guard Kit (030-6706WG3)
For 3x3 Baler (Install Kit 4535C)

Step 1: Locate the factory drilled holes on both sides of the baler tongue. The general location of these holes is shown in the image to the right. If holes are not present or a different location is desired, drill appropriately.

Step 2: Assemble the wind guard (030-6707WG3). Start by locating all materials listed previously. Next, align the 1/4'' (6mm) holes of the guard material (001-6707GM3) with the 1/4'' (6mm) holes of the 001-6707MER/MEL brackets.
(*Recommended to place the guard material on top of the brackets).*
Next align a 001-6707MF backing plate with the 1/4'' (6mm) holes on each end of the assembly. *(The rubber guard material should now be sandwiched between the mounting bracket and backing plate).*
Fasten together with the 1/4'' hardware provided.

Step 3: Bring the assembled wind guard to the baler. Using the 5/16'' hardware, fasten the wind guard to baler using the outside holes of the brackets & the holes located or drilled from Step 1.

Note: If installed correctly, the wind guard should not contact the fly wheel or center feed roll when the pick-up head is fully lifted.

Wind Guard Kit 030-6707WG3
(for 3ft Roto-Cutter balers only)

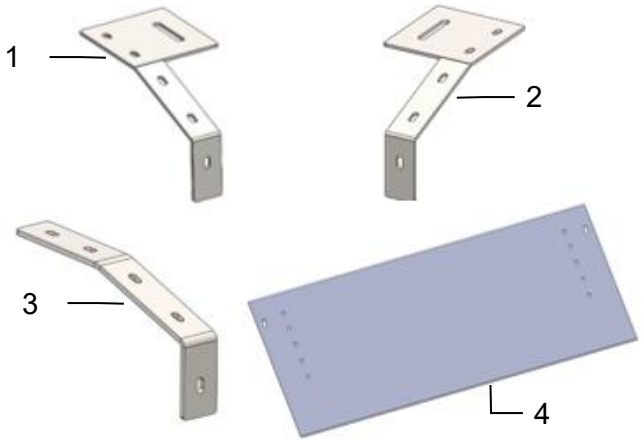

Ref	Description	Part Number	Qty
1	Wind Guard Right Bracket	001-6707MER	1
2	Wind Guard Left Bracket	001-6707MEL	1
3	Backing Plate	001-6707MF	2
4	3' Wind Guard Flap	001-6707GM3	1

Complete Wind Guard Kit 030-6707WG3

Wind Guard Kit (030-6707WG4)
For 3x4 Baler (Install Kit 4536C, 4636C)
Installation

The wind guard is not required to be installed on the 436 HD balers with Roto-Cut pickup.

Step 1: Locate the ledge near the spray shield (1) and with 001-6707MA in hand, mark out drill locations for the two slots of the 6707MA bracket. Bracket should be as centered about the spray shield. If you are confident with drill locations, drill the two holes and move to step 2. Also note the factory drilled holes on the tongue of the baler (2), locate part 001-6707MC and ensure holes align on both sides.

Step 2: Assemble the wind guard (030-6707WG4). Start by locating all the materials listed above. Using the 1''x 1/4'' bolts and washers place the guard material (001-6707GM4) on the top bracket. Guard material should now be held in place with only the bolts. Locate part (001-6707MB) and place over protruding bolts, secure with flat washers and nuts. Note: Ensure the rubber guard material is placed on the top side of the of the 6707MA bracket.

Step 3: Again, using the same hardware from step 2 fasten the guard material to the bottom bracket (001-6707MC) utilizing the remaining 001-6707MB backing bracket to clamp down the material.

Step 4: Bring assembled wind guard to the baler, it is recommended that you get another person to assist here. Start by securing the top bracket to the ledge where holes were previously drilled. Secure with 5/16 x 1'' hardware. Now locate the 5/16 x 1.5'' bolts. Use the bolts, flat washers, and nuts to secure the bottom bracket to the baler factory drilled holes. Refer to finished install side view shown on the right.

Note: If installed correctly, the wind guard should not contact the fly wheel or center feed roll when the pick-up head is fully lifted.

Wind Guard Kit 030-6707WG4
(for 4ft Roto-Cutter balers only)

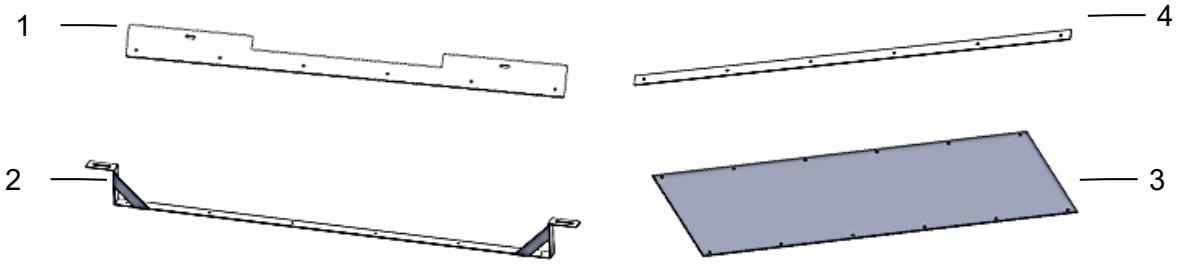

Ref	Description	Part Number	Qty
1	Wind Guard Top Brkt.	001-6707MA	1
2	Wind Guard Bottom Brkt.	001-6707MC	1
3	4' Wind Guard Flap	001-6707GM4	1
4	Backing Plate	001-6707MB	2

Complete Wind Guard Kit **030-6707WG4**

Solenoids and Hose Routing

A. Once Spray Shield is mounted, locate the Solenoid Kit SOL-3SP-LS. Pulsing Solenoids (002-2203F) come pre-installed on the Solenoid Mount Plate (001-4648DSH). Mount this assembly in an accessible location as close as possible (max distance 3ft) to the Spray Shield. This will ensure the most precise application of the preservative.

Solenoids
002-2203F

Solenoid Mount
001-4648DSH

Solenoid Harness
006-3650-S1

B. Once solenoids are mounted, streamline solenoid harness 006-3650-S1 along baler back to connection on main baler harness 006-765B2. Solenoid with white dot attaches to SOL 1 and Solenoid with blue dot attaches to SOL 2. Connect harnesses and ensure they are secure.

C. Route hoses along the path or similar inside of the baler, as shown in picture above. Keep hoses away from moving parts and hydraulic hoses. When all connections are made to the tank, solenoids, and spray shield secure with existing cable clamps or use cable ties.

D. Connect hoses from spray shield to solenoids. Note: Make sure solenoid with white dot attaches to spray shield with white dot. Follow same procedure for blue dots.

Tip Connections

Dot color	Tip	Hose color	Position on 765B2 wire
White Dot	8004 or 11004	White	Sol 1
Blue Dot	8008 or 11008	Blue tracer	Sol 2

700 Solenoid Package for Large Square Balers

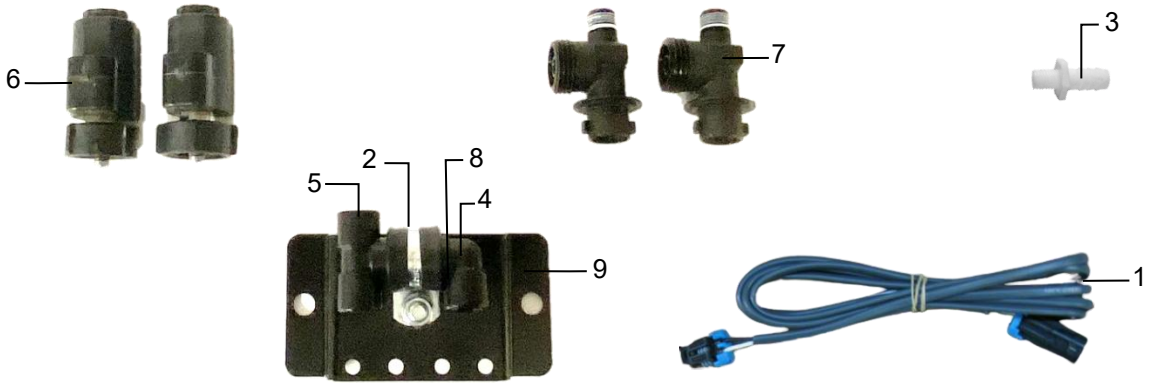

Ref	Description	Part #	Qty	Ref	Description	Part #	Qty
1	Solenoid Harness (5')	006-3650-S1	2	6	Solenoid	002-2203F	2
2	Hose Clamp #6	003-9003	1	7	Solenoid Valve Body	004-1207VF	2
3	1/4" x 1/2" Straight Fitting	003-A1412	1	8	1/4" Nipple	003-M14	1
4	1/4" Elbow	003-SE14F	1	9	Solenoid Holder	001-4648DSH	1
5	1/4" Tee Fitting	003-TT14SQ	1	NP	O-Ring Kit (Replacement)	002-2203FG	2
					Complete Assembly	SOL-3SP-LS	

Expanded View of Pulsing Solenoid (002-2203F)

Replacement Pulsing Solenoid O-Ring Kit available (002-2203FG)
(Includes EPDM O-Rings 6, 8, 9 shown below)

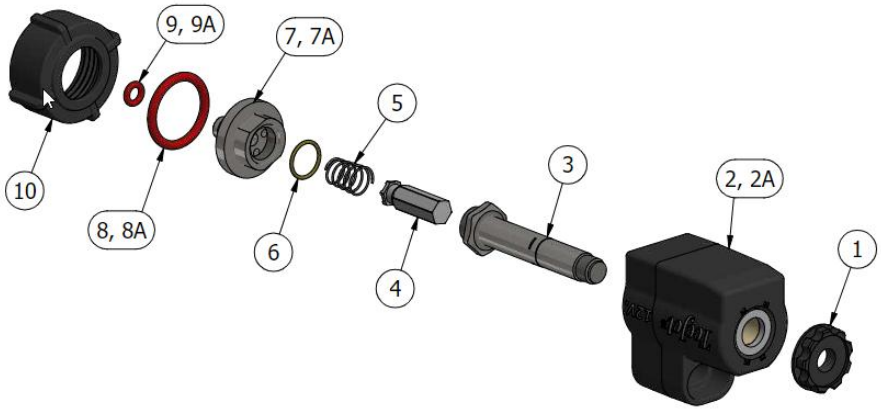

To clean solenoid valves:

The Center Section can be removed from Housing #2 by loosening #1 from #3. Once removed, use wrenches on components #3 and #7 and gently turn to loosen and separate. Soak parts #3-10 in warm soapy water, clean with a soft bristle brush, rinse with clean water to remove buildup before reassembly.

Main Wire Harness - Routing and Connections

Route harness (006-765B2) along inside of the baler. Keep harnesses away from moving parts and hydraulic hoses. Secure with existing cable clamps or use cable ties. When all connections are made to the IPM secure wires.

Locate the CAN port on the baler and attach baler ISO integration harness (006-765VA) to that location. Replace the baler terminator onto the pigtail near the end of the 006-765VA harness that connects to the baler. This terminator may be located on the plate that is behind the baler's main ECM processor.

A. Route harness 006-765B2 along this path or similar inside of the baler. Keep harnesses away from moving parts and hydraulic hoses. Secure with existing cable clamps or use cable ties. When all connections are made to the ISO Pump Module (IPM) secure wires to allow for water to be shed away from the IPM.

B. The Baler Power/Communication Harness (006-765B2) will attach to the open port of the Tractor Harness (006-765IC) and run back to the ISO Pump Module (006-7671LS). Connect the large plug of the Baler Power/Communication Harness (006-765B2) to the plug of the IPM.

C. Attach Baler Interface Harness (006-765VA) to the additional CAN port at front of baler. Make sure Active Terminator is removed from the back underside of the baler is attached to the Baler Interface Harness (006-765VA).

D. Once Baler Interface Harness is connected to the CAN plug, power up the applicator system and setup baler display settings to allow Harvest Tec applicator to communicate. See ISO DISPLAY SETUP pages for further instruction on how to setup baler display settings.

Control Modules and Wiring Harnesses

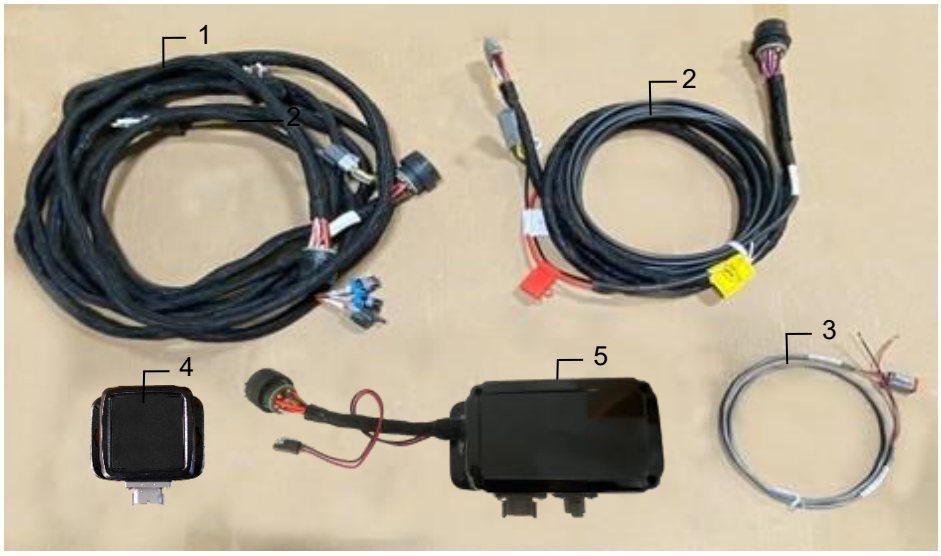

Ref	Description	Part#	Qty
1	Power Lead Baler 35’	006-765B2	1
2	Power Lead Tractor	006-765IC	1
3	Key Switch Wire	006-765CPH	1
4	ISO Pump Module (IPM)	006-7671LS	1
5	ISO Communication Module (ICM)	006-6673	1
NP	Dust Plug Kit	006-765DP	1
NP	120 Ohm Resistor (For use as non-ISO integrated units)	006-700R	

Ref	Description	Part#	Qty
NP	Baler Integration Harness	006-765VA	1
NP	Baler Integration Extension (Required only for pre-2012 Agco Balers)	006-6650VAX	1
NP	Baler Integration Harness (Krone Balers Only)	006-765VAK	1
NP	Baler Integration Harness (Krone Gen. 5 Balers Only)	006-765VAK2	1
NP	USB-C to USB-A Comm.Cable (Optional use for tablet connection)	006-6672USBX	

Star Wheel Moisture Sensor Kit

1. Locate both two-star wheel moisture sensors (030-4642U / UE), twine diverters (001-4644H / 4645H), spacer plates (001-6707ES) and hardware parts bag.
2. The star wheels will be placed as close to the knotter as possible. Follow installation instructions for your specific baler model.
3. Install with four (two per side) 5/16” x 3-1/4” Allen buttonhead cap screws. Make sure the Allen heads are in the bale chamber side of the star wheel.
4. The star wheel with the 6-position plug will need to be placed on the right side of the baler along with the twine diverter with two extra holes. 030-4642UE Star Wheel must rotate in the indicated clockwise direction as the bale moves thru the bale chamber. Reference the rotation indicator sticker on star wheel block.
5. The star wheel with the 2-postion plug will need to be placed on the left, or ladder side of the baler.
6. Place a spacer plate between each star wheel block and the bale chamber with twine diverter on top.
7. Secure spacer plates, star wheels and twine diverters to baler with 5/16” hex nuts and lock washers. Hand tighten with wrench or ratchet- not to exceed 13 ft-lb torque. **DO NOT USE AN IMPACT TO TIGHTEN.** Over torquing star wheel mounting hardware can cause pre-mature wear of the star wheel blocks.
8. Connect moisture harness (006-7307EM2 or 006-7307EM3) to both star wheels.
9. Route other end of (006-7303EM2 or 006-7307EM3) along top of baler to the pump module located at the back of the baler on the tank saddle.
10. Attach rectangle plug of moisture harness to bottom of ISO pump module (IPM).

The following pages contain detailed instructions for specific baler make and models:

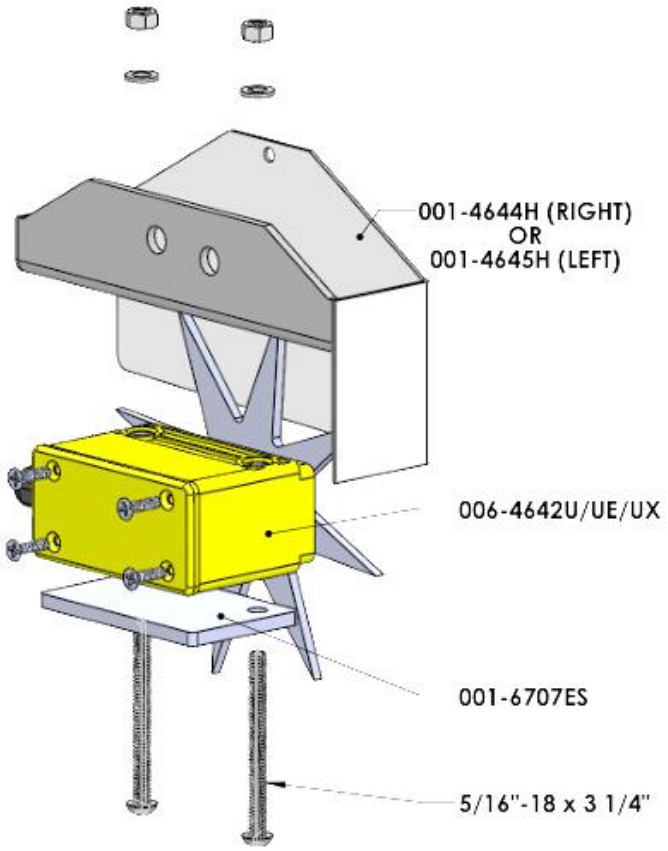

Star Wheel Sensors- 700 Series

For Large Square Balers – Reinforced Yellow Block 2026

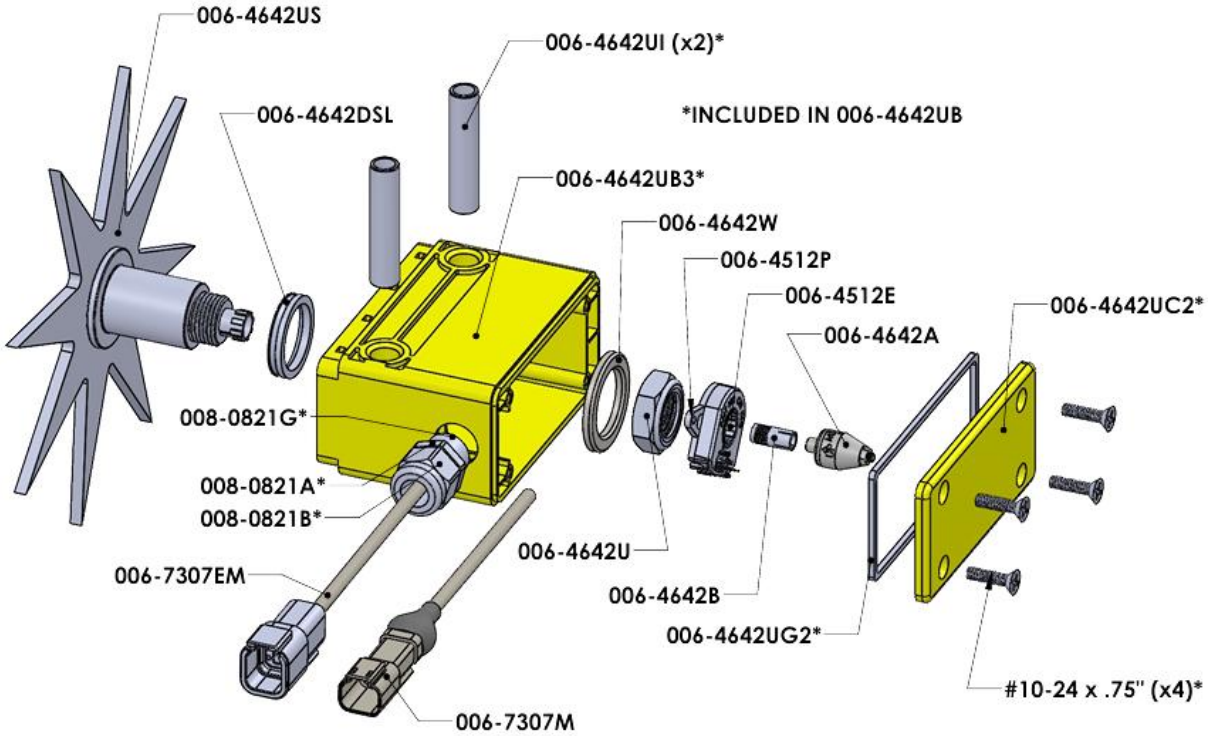

Description	Part#	Qty
Star Wheel (includes swivel insert)	006-4642US	1
Dust Seal Gasket	006-4642UG	1
Star Wheel Block Only	006-4642UB3	1
Star Wheel Block End Cap	006-4642UEC	1
Block Inserts	006-4642UI	2
Wire Compression Grommet	008-0821A	1
Grommet Locking Nut (internal)	008-0821B	1
Washer for Wire Grommet	008-0821G	1
Bearing Washer	006-4642W	1
Star Wheel Nut	006-4642U	1
Encoder Mount (030-4642UE only)	006-4512P	1
Encoder (030-4642UE only)	006-4512E	1
Swivel Insert	006-4642B	1
Swivel Insert	006-4642B	1
Electric Swivel	006-4642A	1
Electric Swivel	006-4642A	1
Star Wheel Block Gasket	006-4642UG2	1
Star Wheel Block Cover	006-4542UC2	1
Encoder Harness Plug (6 Pin) (030-4642UE only)	006-7307EM	1
Moisture Harness Plug (2 Pin) (030-4642U only)	006-7307M	1

Description	Part#	Qty
Star Wheel Spacer Plate (not pictured)	001-6707ES	1
Star Wheel Mounting Hardware (5/16" x 3-1/4" Allen Head Screws, nuts, locks and washers)		2
Twine Guard -Left	001-4645H	
Twine Guard -Right	001-4644H	
Star Wheel Drilling Template (optional)	001-4642T	
Replacement Star Wheel Block*	001-4642UB	
Complete Non-Encoder Star Wheel	**030-4642U**	
Complete Encoder Star Wheel	**030-4642UE**	
Moisture Harness- Standard (12' and 13' Section lengths)	006-7307EM2	
Moisture Harness- Long (16' and 18' section lengths)	006-7307EM3	
Complete Moisture Kit* -Standard	**MSH-LS-STD**	
Complete Moisture Kit*- Long	**MSH-LS-EXT**	

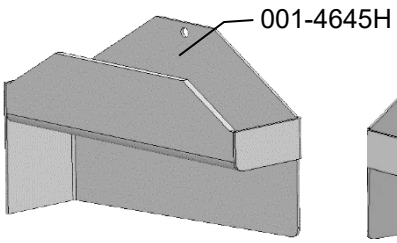

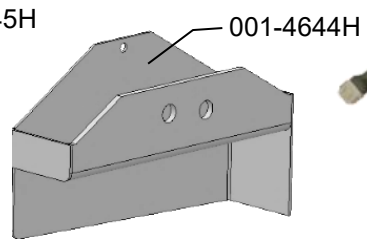

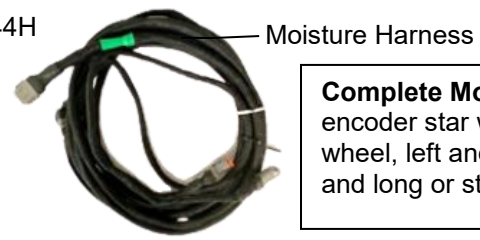

Complete Moisture Kits include encoder star wheel, non-encoder star wheel, left and right twine diverters and long or std. moisture harness.

<u>Moisture Sensor Kit</u> – (MSH-LS-STD)

CNH BB & LB Balers Installation

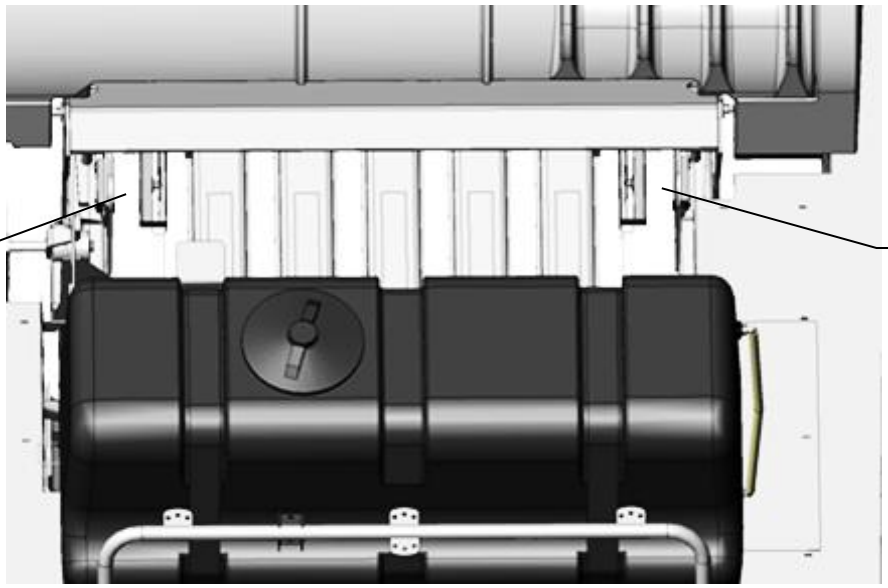

1. Locate the star wheel moisture sensors (030-4642U / UE), star wheel spacer plates (001-6707ES), twine diverters (001-4644H / 4645H) and hardware parts bag.

2. Directly behind the knotters, locate the two predrilled holes per side shown at the arrows. This location is also beneath the lift points on top of the baler.

3. Install the four (two per side) 5/16” x 3-1/4” Allen head cap screws. Make sure the Allen heads are in the bale chamber.

4. Place spacer plate between bale chamber and the star wheel block; install the star wheels below the lift points on the baler. Ensure arrow diagram is followed on back of star wheel blocks.

5. Install the twine diverters over the star wheel sensor. Note: diverter with two extra holes needs to attach to star wheel with 6 position plug.

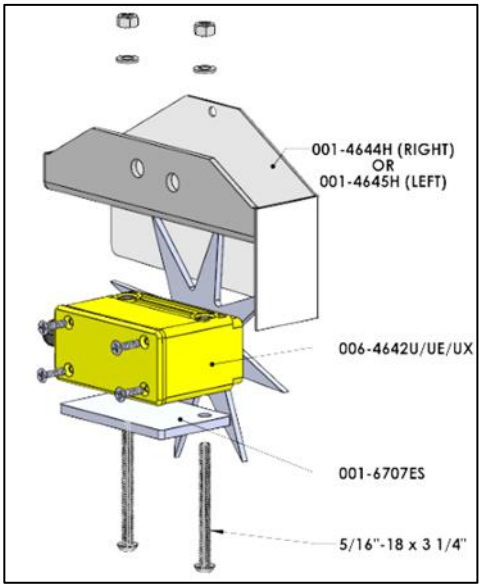

6. Secure spacer plates, star wheels and twine diverters to baler with 5/16” hex nuts and lock washers. Hand tighten with wrench or ratchet- not to exceed 13 ft-lb torque. **<u>DO NOT USE AN IMPACT TO TIGHTEN.</u>** Over torquing star wheel mounting hardware can cause pre-mature wear of the star wheel blocks.

7. Attach harness (006-7307EM2) wires to star wheels and route to (IPM) module and connect.

End of Bale Sensor (EOB)

The End of Bale Sensor determines the position of the needles on the baler. When the needles cycle the sensor communicates this information to the controls. Installation of this sensor is required for use with the Harvest Tec job records. Reference “Sensor Settings” in Operation Manual. Follow the steps below for your baler to mount the sensor.

End of bale sensor bracket (001-4648) will be used. Cutoff excess metal not used during installation.

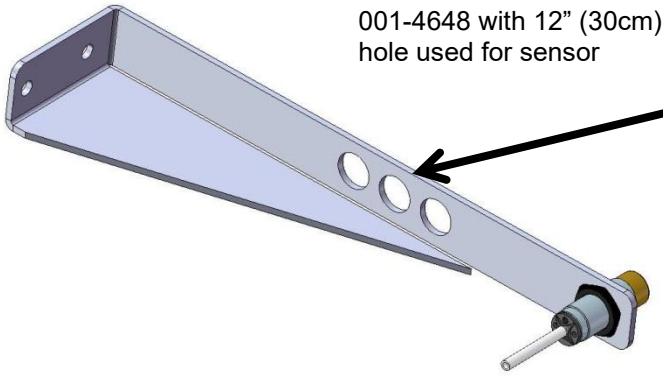

New Big Balers utilize the second position for the End of Bale Sensor

A	B	C
2-7/9”	4-3/8”	5/8”

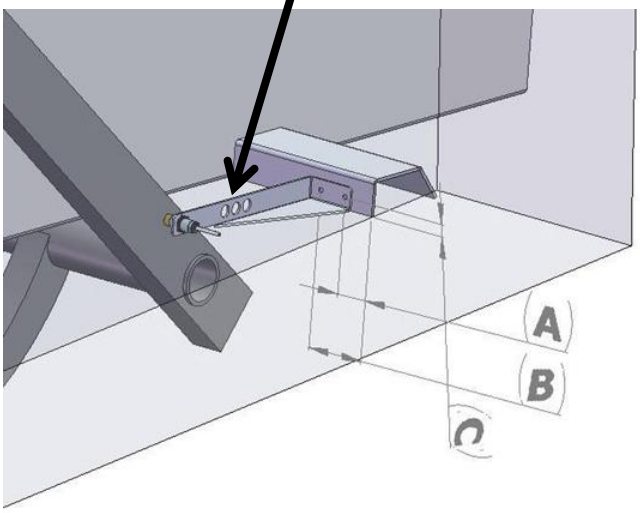

Mount the end of bale sensor bracket (001-4648) as shown on the ladder side of the baler. Mark and drill two 3/8” (10mm) holes and attach the bracket using two 5/16” x 1” self-tapping screws, and 5/16” flange nuts. Keep the sensor 1/4" (7mm) from the needle and tighten both nuts. New BB Balers have been installing the End of Bale Sensor in the second position and trimming off the excess steel. Run the sensor cable (006-7401) and extension (006-7401BBEXT) up to main harness (006-765B2) and attach to EOB plug.

End of Bale Sensor

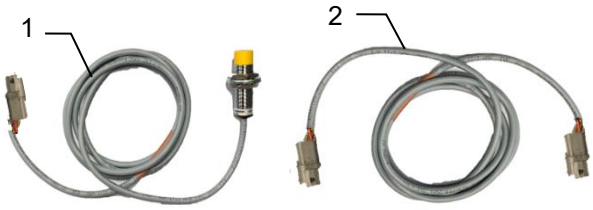

Ref	Description	Part #	Qty
1	End of Bale Sensor	006-7401	1
2	End of Bale Ext.	006-7401EXT	1

Tractor Setup

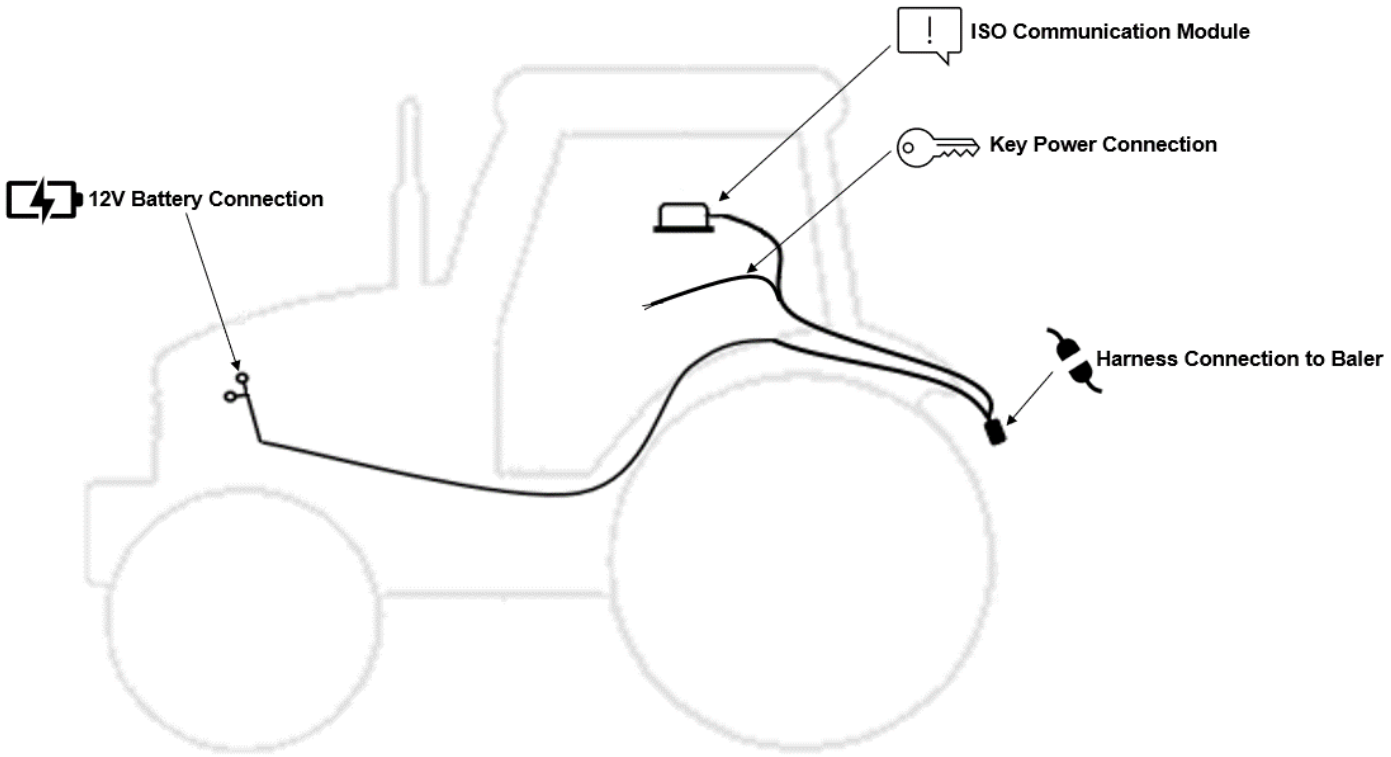

The general tractor setup of the 700 Series applicator can be seen above. The main harness of interest is the tractor power/communication harness (006-765IC). This harness will connect at the tractor battery, to the ISO Communication Module (ICM) mounted in the cab, a keyed power connection point, and connect at the hitch area to the baler power/communication harness (006-765B2). View below to see highlighted installation instruction:

12V Battery Connection

The 12V battery connection must be at the tractor battery. Connection to alternative locations such as an accessory port can cause problems with applicator system.
MUST BE CONNECTED DIRECT TO TRACTOR BATTERY TERMINALS

ISO Communication Module

The ISO communication module is to be mounted inside the cab. Other mounting locations can lead to issues with weathering and operation. Once installed and the system is powered, a green light will turn on with the ICM module.

Key Power Connection

Ensure a solid keyed connection is found inside the cab and wired into. Poor keyed power connection can result in applicator system issues.

Harness Connection to Baler

The tractor harness connects at the hitch to baler power/communication harness (006-765B2). This will allow the system components to communicate with one another. Ensure connections are debris and corrosion free.

Display Options

Optional Harvest Tec Display

The 700 series Harvest Tec Display will allow you to set your real time baling parameters to ensure the most precise application to every bale. This is done by utilizing the improved touch technology to select objects, enter data, and swipe through operational screens.

The Harvest Tec Display offers easy integration by connecting to the additional CAN plug on the 006-765IC harness. Once, connected the Harvest Tec display will power up with applicator system.

Note: The Harvest Tec Display must be used as a standalone display, the baler cannot run both integrated and on the Harvest Tec Display. Must be one or the other. Removal of the 006-765VA or integration harness is required when equipped.

Optional Tablet Display

Precision Baling App

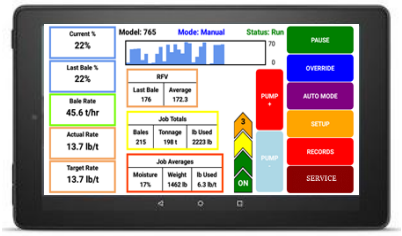

The iOS or Android Tablet displays offer the ability to communicate with the 700 series applicator system via hard-wired connection to the ISO Communication Module (ICM). Through the free Precision Baling App, the operator can set real time baling parameters to ensure the most precise application to every bale. This provides a multi-use option while utilizing the improved app to select objects, enter data, and easily switch through operational screens. The Tablet Display offers easy integration by connecting a charging cable to the USB port on the ICM module. Once connected the Harvest Tec applicator will display upon opening the app and powering up the applicator system. Tablets can be used in addition to integrated baler VT display.

***Made for iPad®**
Required to be running the most current operating system or one version previous.
*iPad is a trademark of Apple Inc., registered in the U.S. and other countries.

Optional Harvest Tec Display Kit (030-7670DK)

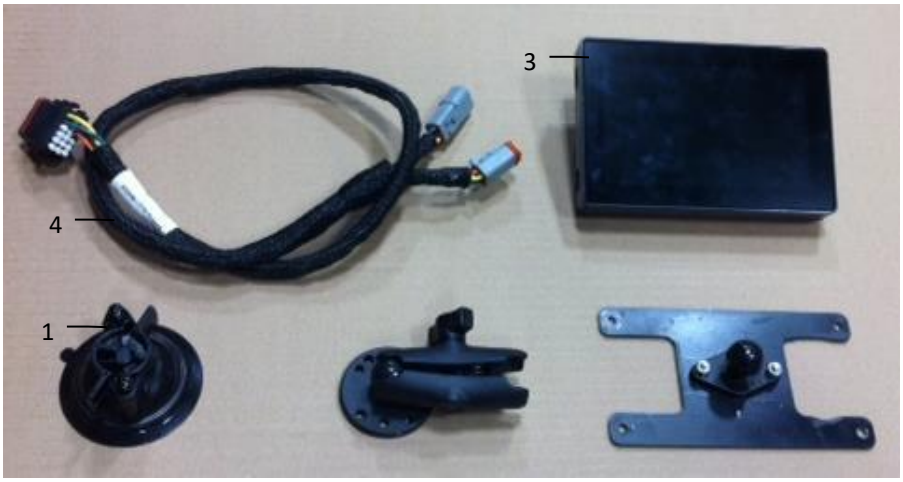

Ref	Description	Part #	Qty
1	Suction Cup Mount	001-2012SCM	1
2	Ram Mount	001-2012H	1
3	Harvest Tec Display	006-765GVT	1
4	Display Harness	006-765GH	1
5	Mounting Plate	001-700GH	1
NP	700 Series Resistor	006-700R	1

Complete HT Display Kit 030-7670DK

Installation Instructions

1. Connect 006-765GH harness connection to 006-765IC tractor harness key power plug.
2. Connect 006-765GH harness to the Harvest Tec VT Display before tightening mount in place.
3. Tighten the mounting and display. Streamline harness as necessary.
4. Once connected, power cycle the system and ensure display is working properly.

NOTE: CANNOT OPERATE APPLICATOR SYSTEM WITH HARVEST TEC DISPLAY AND BALER ISO INTEGRATION or TABLET/ iPad AT THE SAME TIME.

Optional Android Display Kit (030-1670DK)

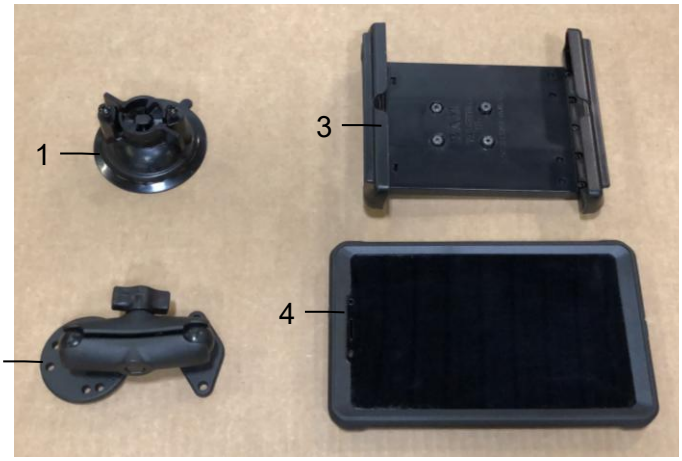

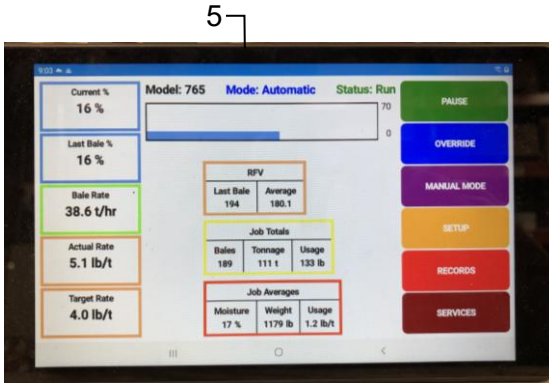

Ref	Description	Part #	Qty
1	Suction Cup Mount	001-2012SCM	1
2	Ram Mount	001-2012H	1
3	Spring Load Cradle	001-2012SLC	1
4	Android Case	001-2012A1	1
5	Android Tablet	006-1670AT	1
NP	USB-C to USB-A Cable	006-6672USBX	1

Complete Android Tablet Display Kit **030-1670DK**

Note: Use a quality communication cable ending with a USB-A connection to connect tablet to (006-765ICM) control module - plug into the USB port showing a tablet.

Optional iPad Display Kit (030-6670DK)

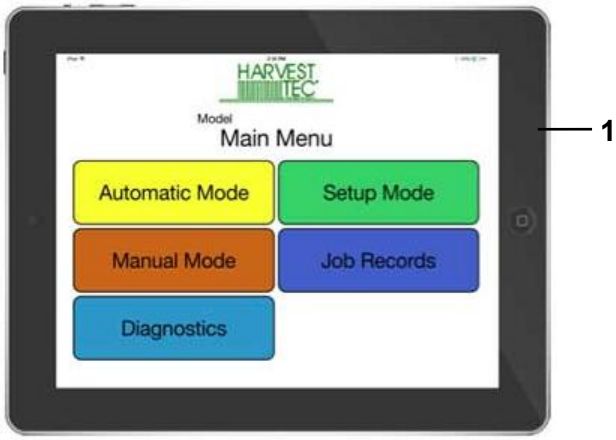

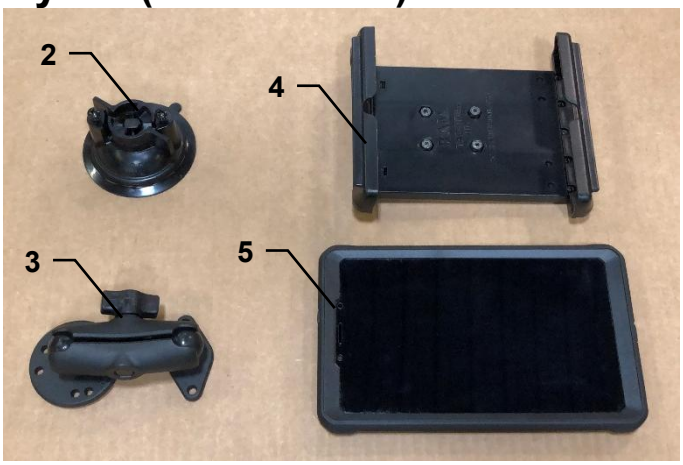

Ref	Description	Part #	Qty
1	iPad Mini 6	006-6670IP	1
2	Suction Cup Mount	001-2012SCM	1
3	Ram Mount	001-2012H	1
4	Spring Load Cradle	001-2012SLC	1
5	iPad Mini 6 Case	001-2012C6	1
NP	Power/Comm. Cable	006-6672USBX	1

Complete iPad Mini Display Kit **030-6670DK**

iPad mini is a trademark of Apple Inc., registered in the U.S. and other countries

Optional ISO Display Adapter Harness (006-7670A or 006-7670F)

For use with a dedicated ISO display

The 700 Series Applicator has the option to tie into compatible dedicated ISO monitors by utilizing the diagnostic port. When connected, the Harvest Tec System will populate as its own object pool within the ISO display. When this object pool is selected, the ISO monitor will then function as a dedicated monitor for the Harvest Tec System.

The Harvest Tec System will function as a stand-alone system when using this adapter.
System will not integrate with the baler ISO system software when using this adapter.

Any tablet connected to the ICM module must be disconnected from the ICM before the Harvest Tec Object Pool screen will activate within the ISO display.
To connect Adapter Harness (006-7670A or 006-7670F), unplug the 4-pin Key Power Plug (006-765CPH) connection from the Tractor Harness (006-765IC) and replace with the plug from the Adapter Harness. Connect the round plug end of the Adapter Harness to the Tractor ISO Display Diagnostic port.

Scan the QR code to view a short video of the
Adapter Harness for ISO Display:

For additional product and service information:
See our YouTube Channel https://www.youtube.com/@harvesttec

ISO Diagnostic Port Adapter (006-7670A)

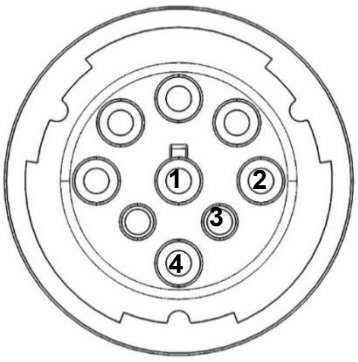

006-7670A connecting plug and pin out

Pin 1	Black	Ground
Pin 2	Yellow	CAN High
Pin 3	Green	CAN Low
Pin 4	Red	12V+ Key Power

ISO Diagnostic Port Adapter (006-7670F)

For Newer Fendt and MF Tractors with plug location in the cab ceiling

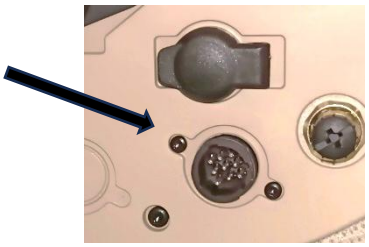

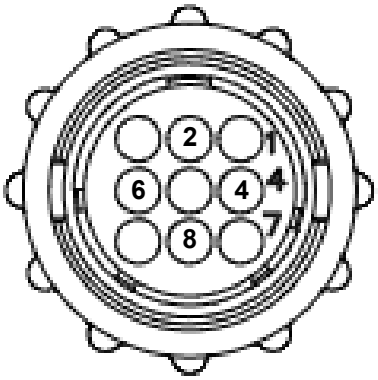

006-7670F connecting plug and pin out

Pin 8	Black	Ground
Pin 4	Yellow	CAN High
Pin 2	Green	CAN Low
Pin 6	Red	12V+ Key Power

Optional Baler VT Integration (for compatible CNH ISO balers)

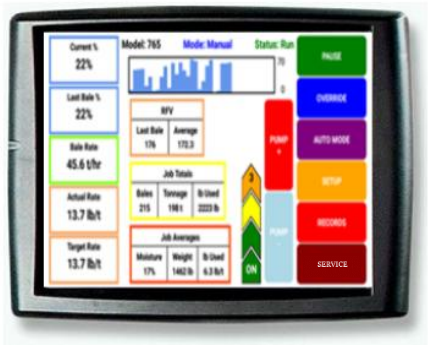

The 700 series integration to the Baler VT allows for the ability to set your real time baling though the baler VT and monitor both baler settings and Harvest Tec system parameters on one screen to ensure the most precise application to every bale.

The 700 series offers easy integration by connecting to the additional CAN plug on the 006-765B2 harness. Once connected the Harvest Tec system will display with power up of the baler and applicator system.

Baler Display Integration

The ISOBUS Monitor utilizes touch screen options to make selections. Selections are made by finding the desired selection and pressing the touch screen icon. All buttons are labeled and color coded.

ISO Baler Integration Setup – CNH balers

Follow the steps below to setup the integration of the 700 Series into the Pro 1200 Series Monitor.

1. Select the baler Setup Tab in the top right corner of the baler run screen.

2. Open the Diagnostics Tab by selecting the (stethoscope icon) and then the System Information Tab.

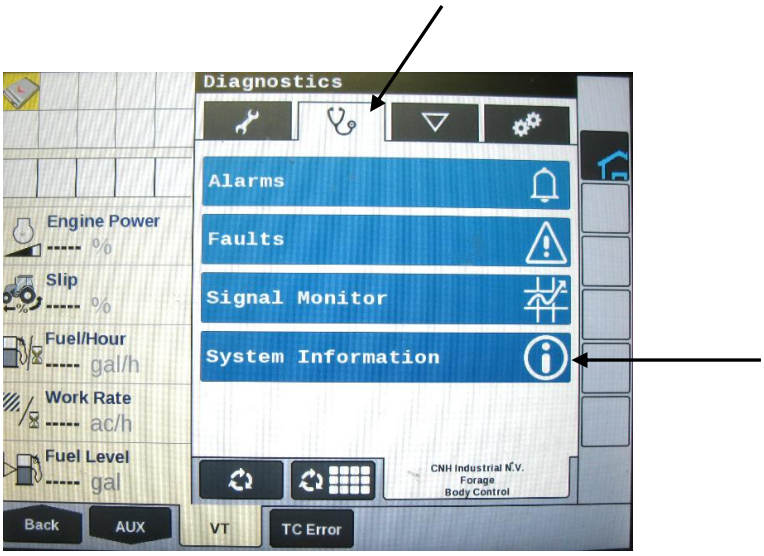

3. On the System Information page, activate Dealer Mode by pressing and holding the first blank square box under the down arrow on the right side of the screen for 10 seconds.

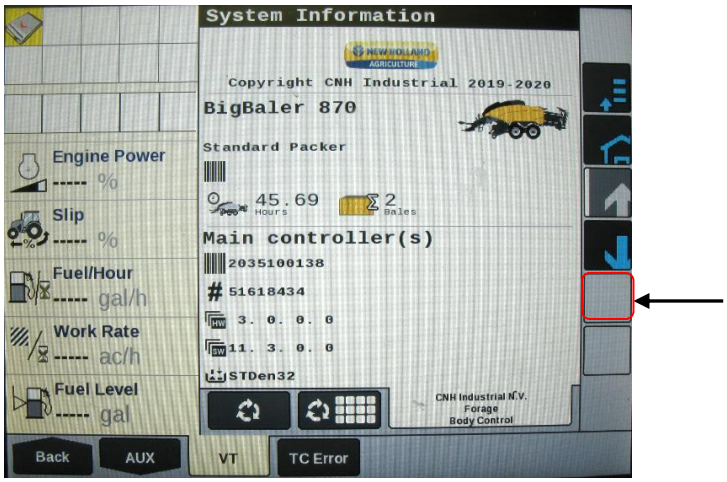

700BBHD Integration Instructions (continued)

4. After 10 seconds the first screen below will appear prompting you for a code. Press the ‘0’ and enter the Code 1379 when the numbers appear.

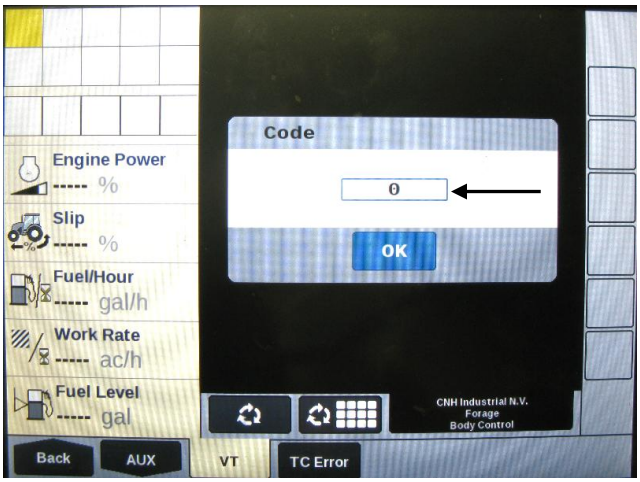

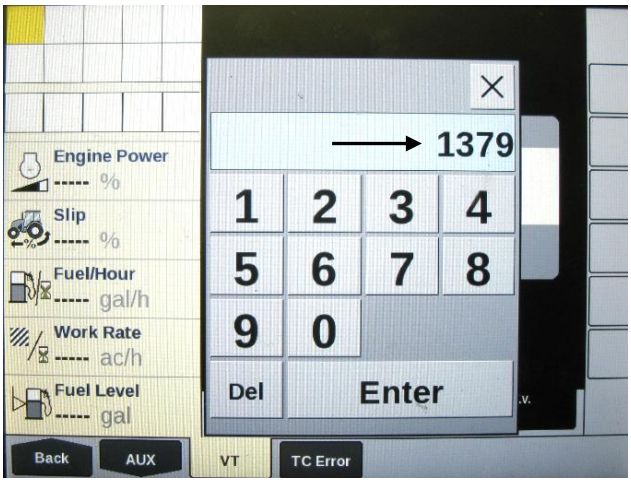

The screen below will appear alerting you ‘Dealer Mode Activated’. Press OK and go back to the balers home screen.

5. Select the baler Setup tab in the top right corner of the baler run screen. Then press Machine Configuration from the baler setup page (wench icon at top).

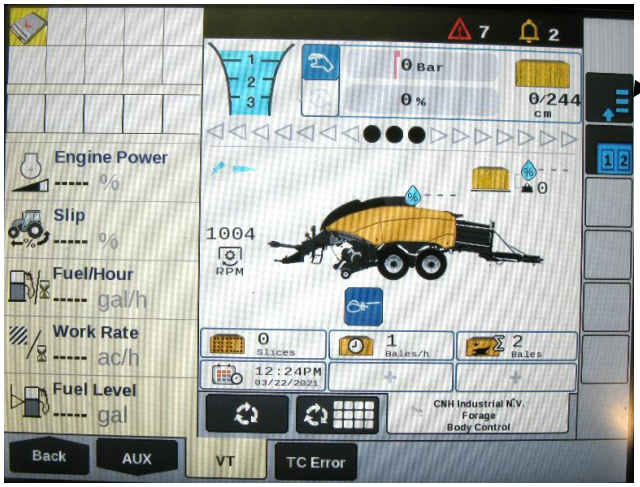

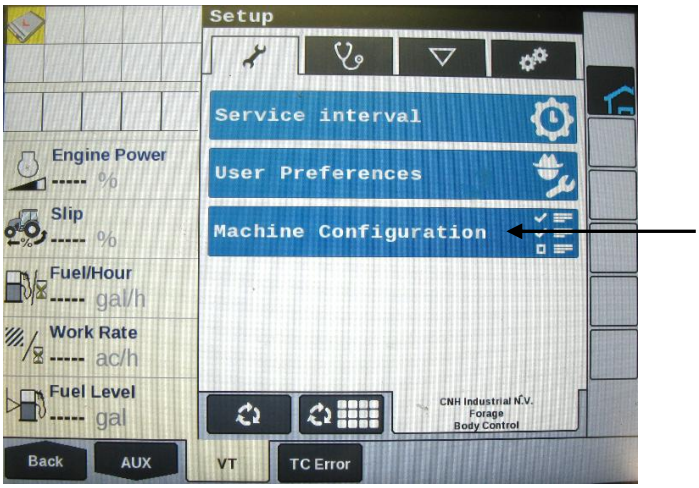

CNH ISO Integration Instructions (continued)

6. Select the Moisture Sensor line on the Machine Configuration screen. On the next screen that appears select ‘Starwheel Extension’ from the drop down for Harvest Tec 700 Series Preservative Applicator and 700 Moisture Only systems. ‘Starwheel Moisture’ refers factory installed starwheel moisture system kits.

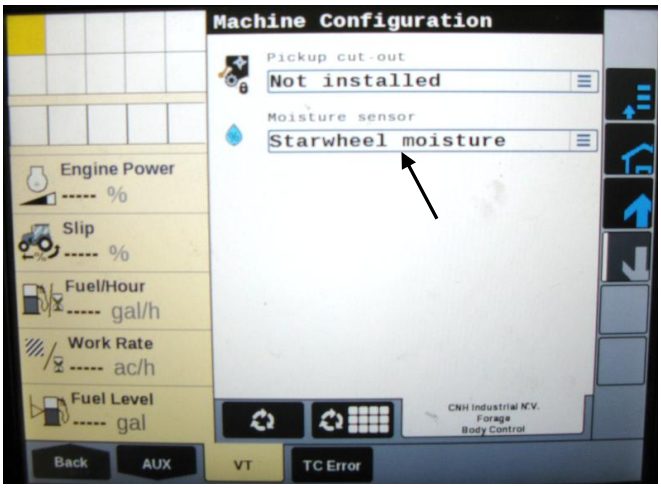

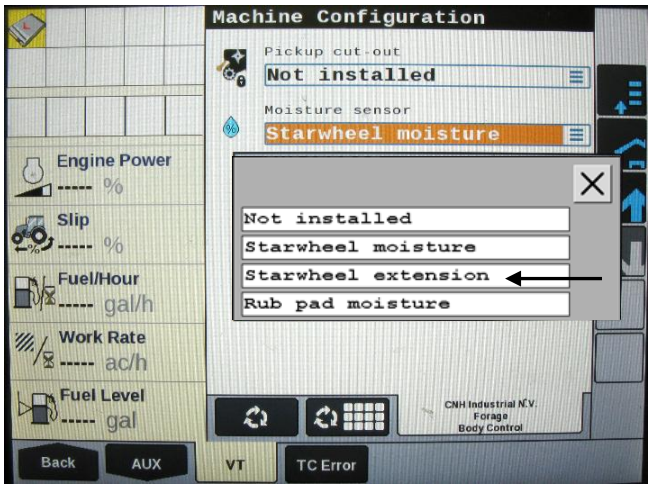

The moisture sensor selection will now read Starwheel Extension on the Machine Configuration page.

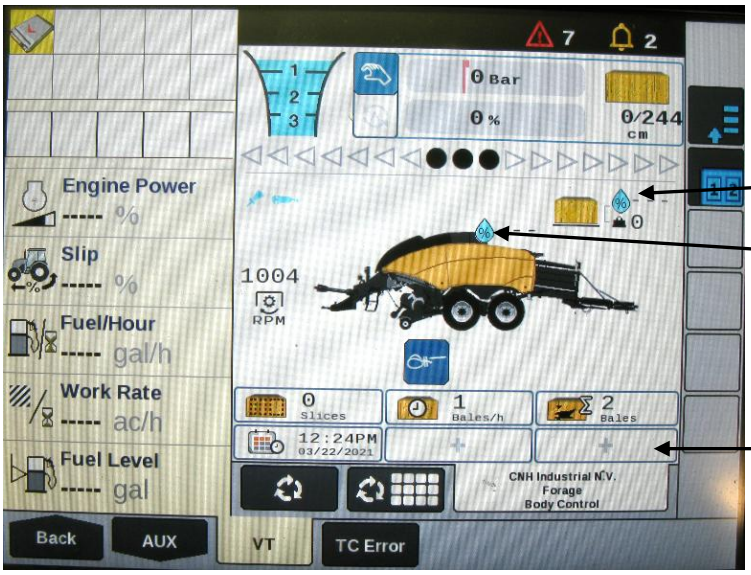

The current bale moisture content will now display above the baler next to the water droplet and the previous bale moisture will display next to the bale in above the are above the bale chute (below).

Previous Bale Moisture

Current Bale Moisture

Use the (+) signs to add any other Harvest Tec Options that you would like to have show on your baler run screen.

Refer to the 700 Series Large Square Baler Operation Manual to view the operation details

Wiring Diagram – 700 Series

1. Connect the power harness (006-765IC) to the tractor battery (12 volt) using the red wire with fuse to the positive side and the black wire to the negative.
   A. **The power harness must be connected to the battery!**
   CONTACT HARVEST TEC BEFORE MODIFICATIONS.
   The unit will draw more amps than convenience outlets can handle. Any modifications of the power harness will void systems warranty
   B. **This unit will not function on positive ground tractors.**
   C. **If the unit loses power while operating it will not keep track of accumulated pounds of product used.**
2. The power harness on the tractor (006-765IC) will run from the tractor battery to the hitch. The power harness on the baler (006-765B2) will connect to the tractor power harness (006-765IC) at the hitch.
3. Connect the keyed power wire (006-765CPH) to a keyed power source on the tractor.
   The keyed power wire must connect to a keyed source or the unit will not power up correctly.
4. Attached the ISO Communication Module (006-7671) to the tractor power harness (006-765IC).
5. Attach the End of Bale (EOB) connection on baler harness (006-765B2) to the EOB Sensor (006-7401).
6. Attach the Flowmeter (006-4724A) to ISO Pump Module connection on pump plate assembly.
7. Attach the rubber molded connector on pump plate to the Pump (007-4120DE).
8. Attach star wheel (030-4642 U/UE) connection to ISO Pump Module on pump plate assembly.

System Wiring Diagram

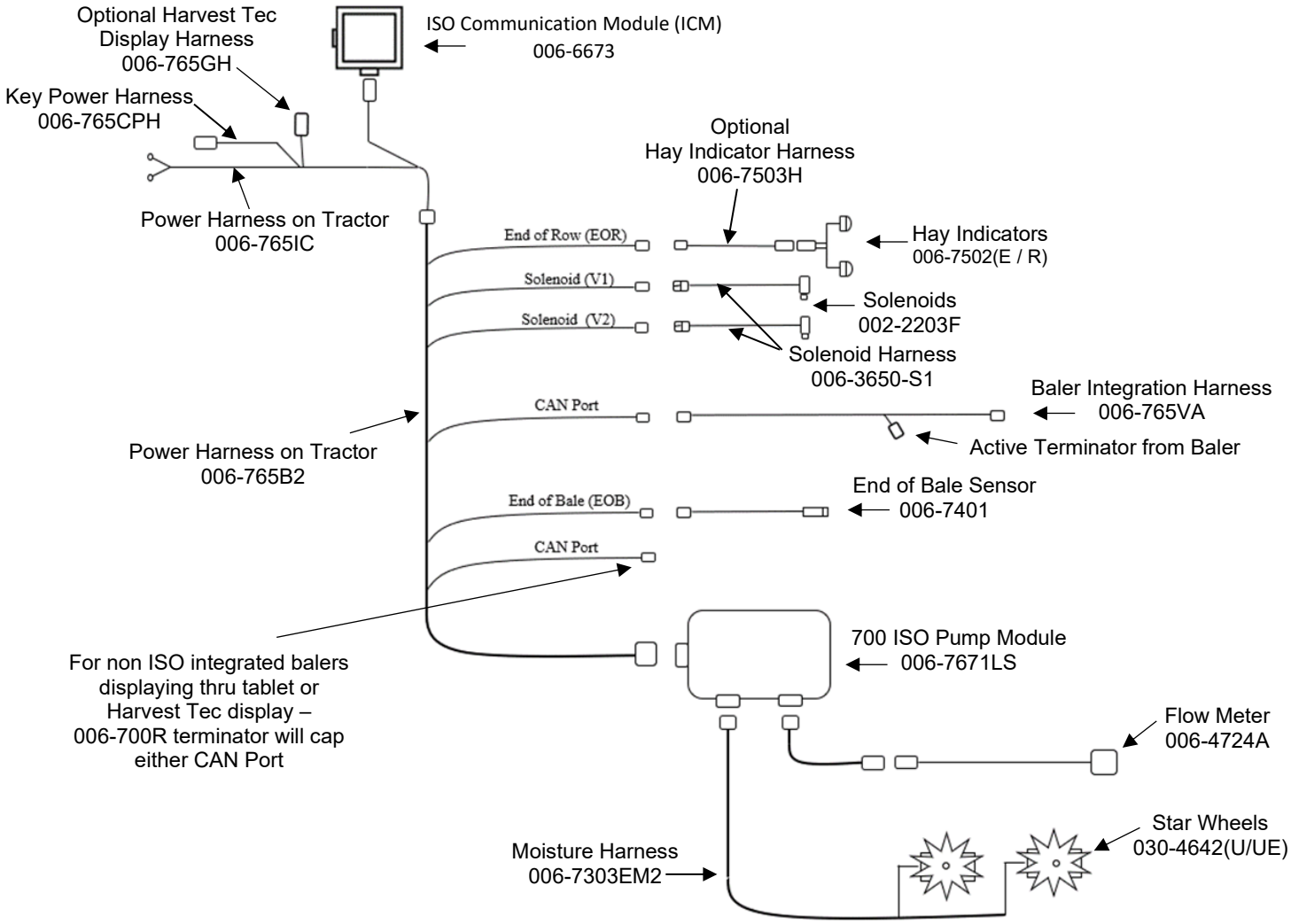

Pin Outs

Integrated Control Module (ICM) on Tractor Harness 006-765IC

(Deutsch Plug Number: DTM06-12SA)

Pin 1	Red	+12V from ECU
Pin 2	Purple	Signal Wire
Pin 3	Red/White	+12V CAN X
Pin 4	Black/White	Ground CAN X
Pin 5	Orange	CAN X Hi
Pin 6	Blue	CAN X Lo
Pin 7	Green	ISO CAN Lo
Pin 8	Yellow	ISO CAN Hi
Pin 9	White	GPS Extension 1
Pin 10	Gray	GPS Extension 2
Pin 11	Brown	GPS Extension 3
Pin 12	Black	Ground from ECU

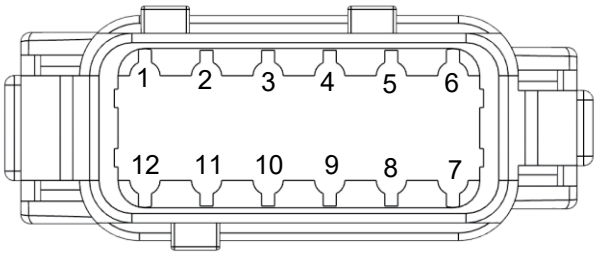

ISOBUS Plug on Tractor Harness 006-765IC

(Deutsch Plug Number: DT04-4P)

Pin 1	Red	+12V from ECU
Pin 2	Yellow	ISO CAN Hi
Pin 3	Green	ISO CAN Lo
Pin 4	Black	Ground from ECU

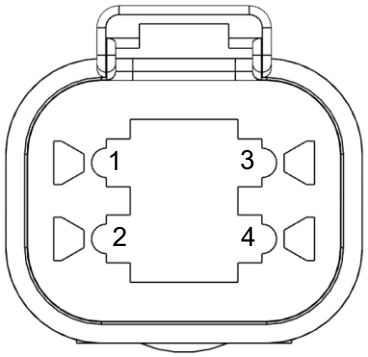

Power / Communication Tractor Harness 006-765IC at Hitch

(Deutsch Plug Number: HDP24-24-18PN)

Pin 1	Not Used	----
Pin 2	Yellow	ISO CAN Hi
Pin 3	Green	ISO CAN Lo
Pin 4	Red	+12V Power to ECU
Pin 5	Black	Ground to ECU
Pin 6	Red	+12V From Battery
Pin 7	Not Used	----
Pin 8	Black	Ground From Battery
Pin 9	Not Used	----
Pin 10	Purple	Signal Wire
Pin 11	Red/White	+12V CAN X
Pin 12	Black/White	Ground CAN X
Pin 13	Orange	CAN X Hi
Pin 14	Blue	CAN X Lo
Pin 15	White	GPS Extension 1
Pin 16	Gray	GPS Extension 2
Pin 17	Brown	GPS Extension 3
Pin 18	Not Used	----

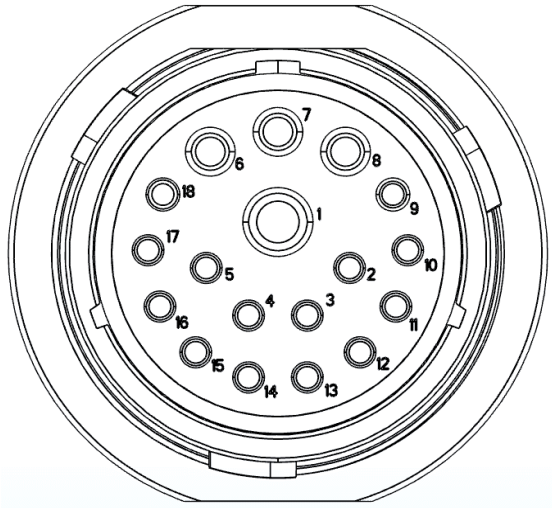

Power / Communication Baler Harness 006-765B2 at Hitch

(Deutsch Plug Number: HDP26-24-18SN)

Pin 1	Not Used	----
Pin 2	Yellow	ISO CAN Hi
Pin 3	Green	ISO CAN Lo
Pin 4	Red	+12V Power to ECU
Pin 5	Black	Ground to ECU
Pin 6	Red	+12V From Battery
Pin 7	Not Used	----
Pin 8	Black	Ground From Battery
Pin 9	Not Used	----
Pin 10	Not Used	----
Pin 11	Not Used	----
Pin 12	Not Used	----
Pin 13	Not Used	----
Pin 14	Not Used	----
Pin 15	Not Used	----
Pin 16	Not Used	----
Pin 17	Not Used	----
Pin 18	Not Used	----

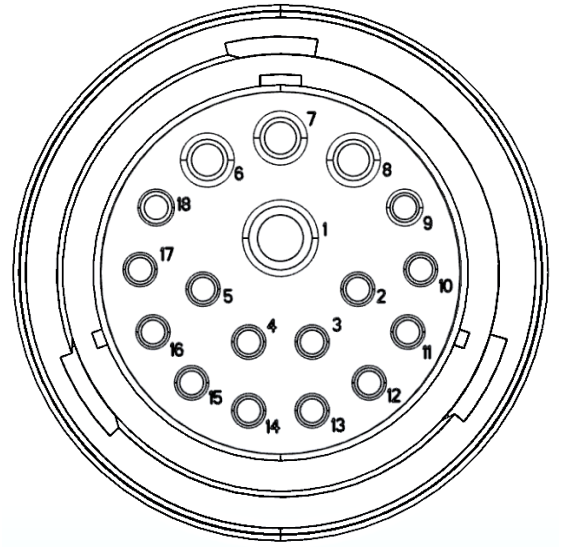

Power / Communication Baler Harness 006-765B2 at IPM Module

(Deutsch Plug Number: HDP24-24-18SN)

Pin 1	Not Used	----
Pin 2	Yellow	ISO CAN Hi
Pin 3	Green	ISO CAN Lo
Pin 4	Red	+12V Power to ECU
Pin 5	Black	Ground to ECU
Pin 6	Red	+12V From Battery
Pin 7	Not Used	----
Pin 8	Black	Ground From Battery
Pin 9	Not Used	----
Pin 10	Orange/White	+12V Power to EOR
Pin 11	Orange/Black	Ground to EOR
Pin 12	Purple/Green	EOR Signal
Pin 13	Blue/White	EOB Signal
Pin 14	Gray/Red	+12V Power to Solenoid 1
Pin 15	White/Black	Ground to Solenoid 1
Pin 16	Orange/Red	+12V Power to Solenoid 2
Pin 17	White/Black	Ground to Solenoid 2
Pin 18	Not Used	----

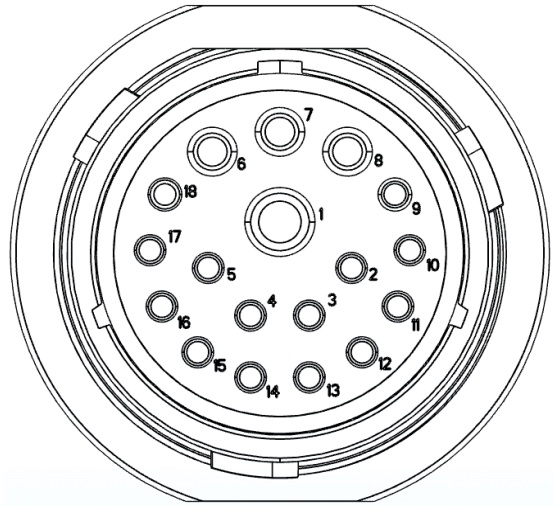

*IPM Module Whip Plug- Pin # 5 Not Used

Solenoid 1 Plug on Baler Harness 006-765B2

(Deutsch Plug Number: APTIV 12052641)

Pin B	Gray/Red	+12V to Solenoid 1
Pin A	White/Black	Ground to Solenoid 1

Solenoid 2 Plug on Baler Harness 006-765B2

(Deutsch Plug Number: APTIV 12052641)

Pin B	Orange/Red	+12V to Solenoid 2
Pin A	White/Black	Ground to Solenoid 2

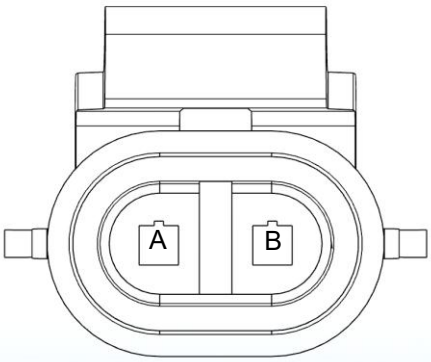

CAN / IDM on Baler Harness 006-765B2

(Deutsch Plug Number: DT06-4S)

Pin 1	Red	+12V to ECU
Pin 2	Yellow	ISO CAN Hi
Pin 3	Green	ISO CAN Lo
Pin 4	Black	Ground to ECU

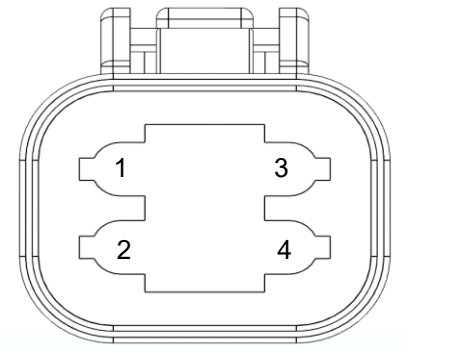

End of Bale Sensor Plug on Baler Harness 006-765B2

(Deutsch Plug Number: DT06-3S)

Pin 1	Orange/White	+12V to End of Bale Sensors
Pin 2	Orange/Black	Ground to End of Bale Sensors
Pin 3	Blue/White	Signal

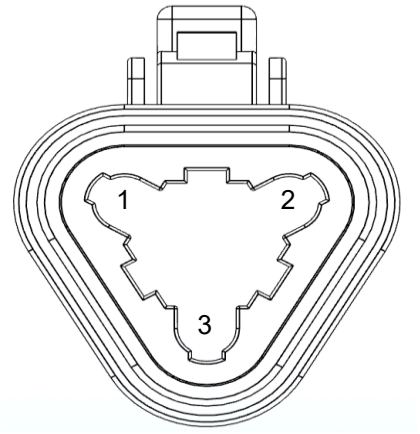

End of Row Sensors Plug on Baler Harness 006-765B2

(Deutsch Plug Number: DT06-3S)

Pin 1	Orange/White	+12V to End of Bale Sensors
Pin 2	Orange/Black	Ground to End of Bale Sensors
Pin 3	Blue/White	Signal

Integration Harness Plug on Baler Harness 006-765VA

(Plug: APTIV 12052848)

Pin A	Not Used	----
Pin B	Red	TBC Power
Pin C	Not Used	----
Pin D	Gray	TBC Ground
Pin E	Orange	CAN Hi
Pin F	Blue	CAN Lo

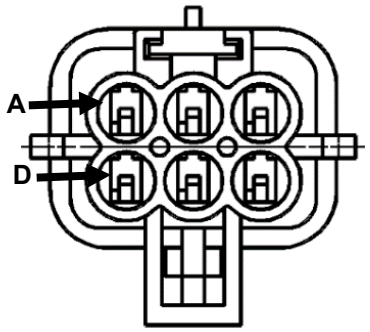

Pump Connection on 700 IPM Controller Harness

(16 AWG Two-Wire Plug)

Pin 1	Red	Power to Pump
Pin 2	Black	Ground to Pump

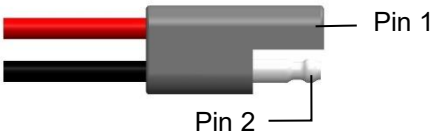

Harvest Tec LLC. Warranty and Liability Agreement

Harvest Tec, LLC. will repair or replace components that are found to be defective within 12 months from the date of manufacture. Under no circumstances does this warranty cover any components which in the opinion of Harvest Tec, LLC. have been subjected to negligent use, misuse, alteration, accident, or if repairs have been made with parts other than those manufactured and obtainable from Harvest Tec, LLC.

Our obligation under this warranty is limited to repairing or replacing free of charge to the original purchaser any part that in our judgment shows evidence of defective or improper workmanship, provided the part is returned to Harvest Tec, LLC. within 30 days of the failure. If it is determined that a non-Harvest Tec manufactured product has been used inside the Harvest Tec applicator system where the failure occurred, then Harvest Tec reserves the right to deny the warranty request at their discretion. Parts must be returned through the selling dealer and distributor, transportation charges prepaid.

This warranty shall not be interpreted to render Harvest Tec, LLC. liable for injury or damages of any kind, direct, consequential, or contingent, to persons or property. Furthermore, this warranty does not extend to loss of crop, losses caused by delays or any expense prospective profits or for any other reason. Harvest Tec, LLC. shall not be liable for any recovery greater in amount than the cost or repair of defects in workmanship.

There are no warranties, either expressed or implied, of merchantability or fitness for particular purpose intended or fitness for any other reason. This warranty cannot guarantee that existing conditions beyond the control of Harvest Tec, LLC. will not affect our ability to obtain materials or manufacture necessary replacement parts.

Harvest Tec, LLC. reserves the right to make design changes, improve design, or change specifications, at any time without any contingent obligation to purchasers of machines and parts previously sold.

Revised 1/24

HARVEST TEC, LLC.
P.O. BOX 63
2821 HARVEY STREET
HUDSON, WI 54016 USA
PHONE: 715-386-9100
FAX: 715-381-1792
Email: info@harvesttec.com