Installation Manual

Model 795CL & 796VCL

100 Gallon Preservative Applicator

For Claas Large Square Balers

HarvestTec®

EST. 1976

795CL-796VCL-26-INST-Imp&Metric
9/26

Table of Contents

	PAGE
Introduction	**3**
System Overview	**4**
Tank and Tank Saddle	**5-8**
Claas 2100-2200 Balers	5
Claas 3200-3400 and 5200 Balers	6
Claas 5300 Balers	7
Tank Kit Breakdown	8
Pump Plate Assembly	**9-10**
Pump Plate Breakdown	10
Drain / Fill Line	**11-12**
Parts Bags and Hoses	12
Spray Shields	**13-15**
Claas 2200 - Install Kit 4499C	13
Claas 2100 – Install Kit 4509C	14
Claas 2300-3300 and 5200-5300 – Install Kit 4537C	15
Solenoids	**16-17**
Breakdown	17
Main Baler Harness and Connections	**18**
Controls Breakdown	18
Moisture Sensors	**19-24**
Star Wheel Breakdown	20
Claas 2100-2200 Balers - Mounting	21
Claas 3200-3400 and 5200-5300 Balers – Mounting	22
End of Bale (EOB) Sensor	**25-26**
Tractor Setup	**27**
Display Options	**28-31**
Optional Harvest Tec Display Kit	29
Optional Android Tablet Display Kit	30
Optional iPad Mini Display Kit	30
Optional Tractor ISO Display Adapters	31
Wire Diagram	**32**
Pin Outs	**33-35**
Warranty Statement	**36**

Introduction

Thank you for purchasing the 700 Series Preservative Applicator. This applicator system has been designed to be operated through a number of different displays and tablets using the Precision Baling App. These include the Harvest Tec VT display, the baler's ISOBUS and display on the baler monitor (if compatible/applicable), or iOS/Android Tablet (not included).

The 700 Series Preservative Applicator System is designed to apply Baler's Choice buffered propionic acid (made by Harvest Tec) to the forage crop as it is baled. **Use of alternative products may cause system complications and voids Harvest Tec manufacturer's warranty.** Failure to follow instructions can result in personal injury or equipment malfunction. If you need parts for the system, please view the Parts Breakdown within this manual and contact your local authorized dealer to order replacement parts.

Right and Left sides are determined by facing in the direction of forward travel.

System Requirements

Made for Harvest Tec Display, Baler Integration, or Tablet
For best performance ensure all displays are running the latest operating system.

Tools Needed:

- Standard wrench set
- Electric drill and bits
- Side cutter
- Crescent wrench
- Standard screwdriver
- Center punch
- Standard nut driver set
- Standard socket set
- Hammer
- Metal cutting tools
- Hose cutter

System Overview

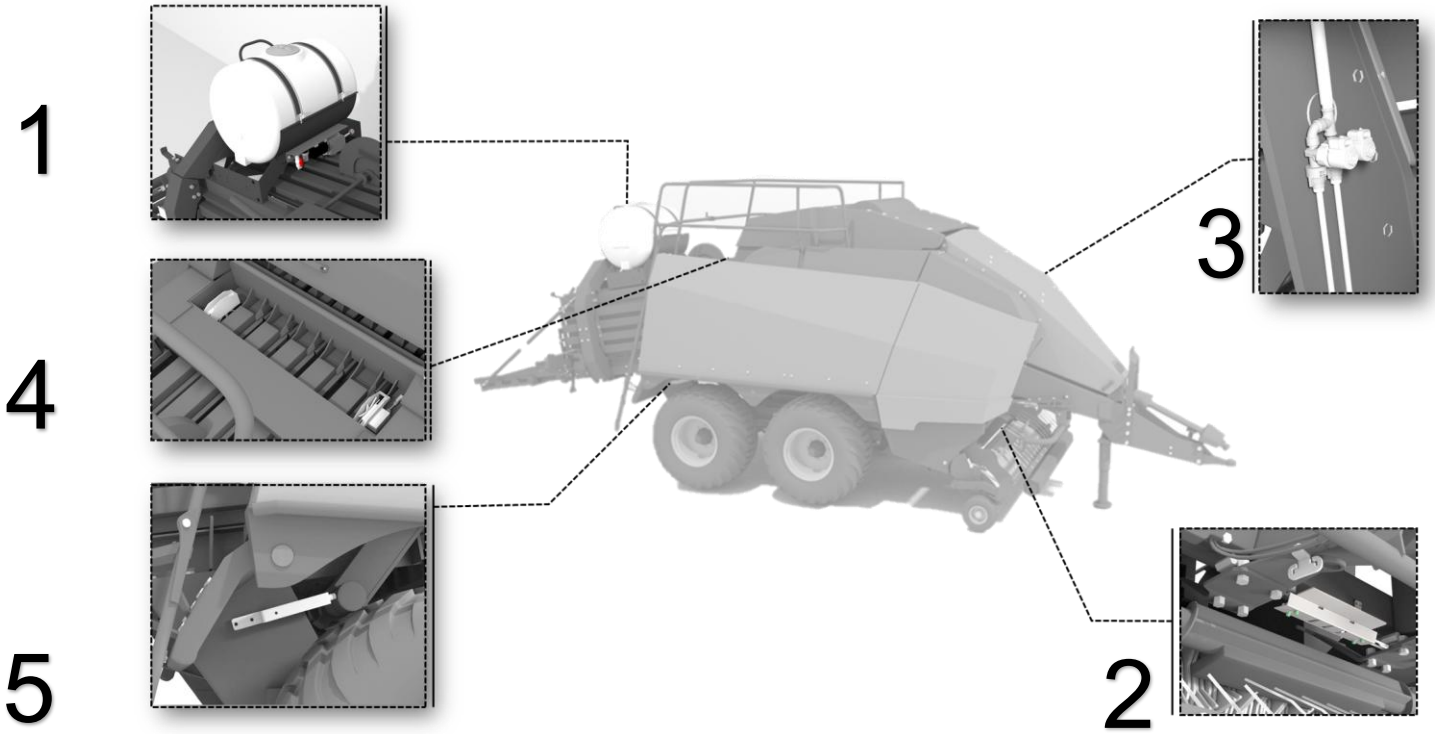

The 700 series applicator system consists of five main areas of installation, these include:

1) Tank Mounting Installation
2) Spray Shield Installation
3) Solenoid Installation
4) Star Wheel Installation
5) End of Bale Installation

Tank, Saddle, and Pump, Installation

This will mount on the bale chute towards the rear of the baler. All mounting and parts should be verified prior to beginning installation. Follow *Installation of Tank, Saddle, and Pump* section for step-by-step instruction.

Spray Shield Installation

The spray shield assembly is designed to spray the hay evenly as the baler picks it up. This holds the tips and is connected to plumbing to apply preservative as precisely as possible. Follow the *Installation* of *Spray Shield* section for sketches of the spray shield nozzle holders and step-by-step instruction.

Solenoid Installation

The dual solenoid setup is to be mounted as close to the spray shield as possible. This will provide the best result to ensure the proper output of preservative is applied through the nozzles. Follow *Installation of Solenoids and hose routing* section for step-by-step instructions.

Star Wheel Installation

This is the moisture setup for the applicator system, installation will be done on top of the bale chamber so the star wheels can make sufficient contact with the bale. Follow *Installation of Star Wheel Moisture Sensor* sections for step-by-step instruction.

End of Bale Installation

The end of bale sensor determines the position of the needles on the baler. When the needles cycle the sensor communicates this information to the 700 series. Installation of this sensor is required for use with the Harvest Tec Virtual Terminal. Follow *Installation of End of Bale Sensor* section for step-by-step guide.

Installation of Tank, Saddle and Pump

Claas 2100-2200 Balers (030-0491V-TK)

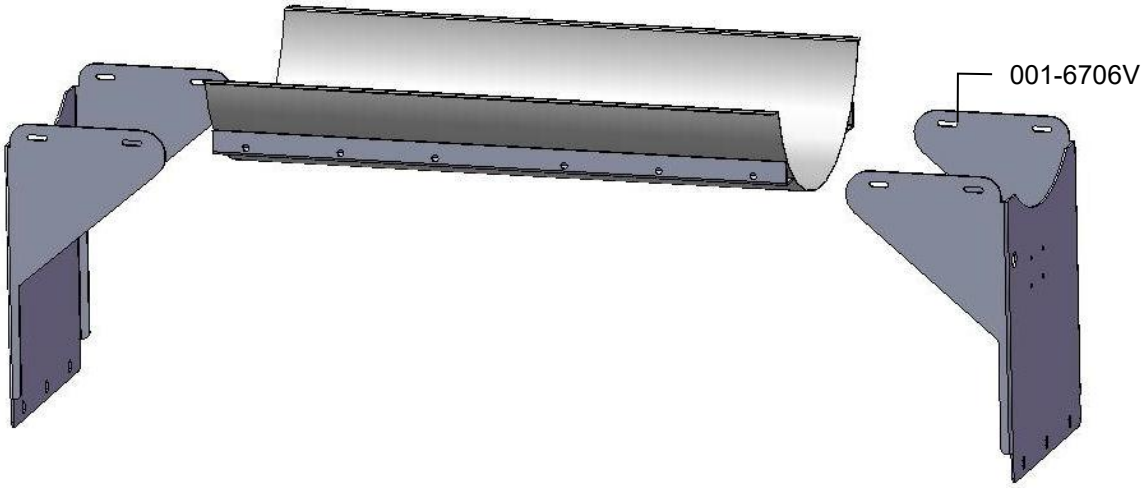

1. Locate parts bag 3. Install both saddle legs (001-6706V) onto the saddle (001-6706A) with eight 3/8” x 1-1/4” bolts, locks, and flat washers. Note: For 3 x 3 balers the slots in the legs will attach to the second and fourth weld nuts in from each end, of the saddle, on both sides. For 3 x 4 or 4 x 4 balers the slots in the legs will attach to the first and second weld nuts in from each end, of the saddle, on both sides.

2. Once legs and saddle are loosely attached measure the distance from the top outside corners of the bale chamber where the saddle will be attached. Move legs in or out so the outside edges will match this dimension. Also try to center the saddle within these dimensions. Do not fully tighten bolts until mounted on the baler.

3. Depending on your baler, mount the tank legs and saddle on the baler just in front of or behind the compression arm. If holes are not present, mark holes and drill with a 9/16” drill bit. The tank legs bolt to the baler with six ½” x 1 ¾” button head allen bolts, locks, flat washers, and hex nuts. Note: handrail is pointing toward front of baler.

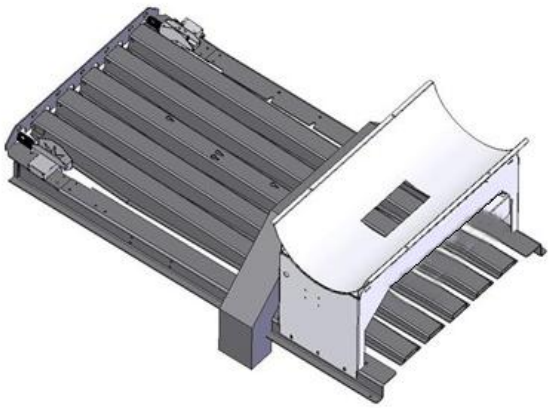

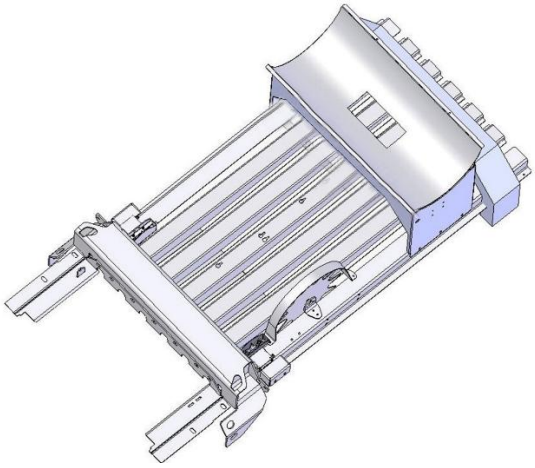

Claas 3200-3400 and 5200 Balers (030-0491CL-TK)

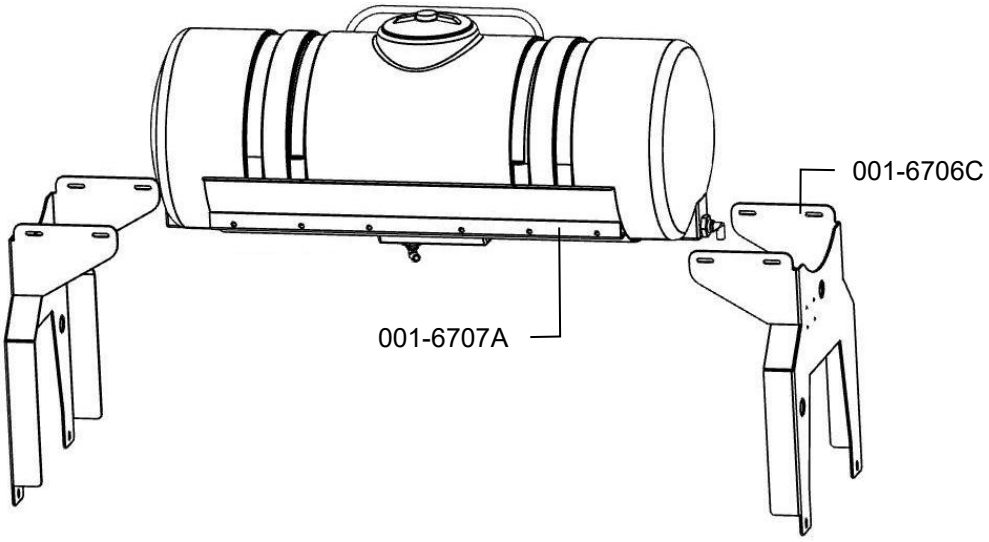

1. Prior to the installation of the tank assembly on the baler, the factory handrail support that connects the handrail to the rear tension beam must be removed. The hardware used to mount the support to the railing is reused when securing the handrail.

2. Fasten the legs (001-6706C) to the saddle (001-6706A) with eight 3/8” x 1-1/4” bolts, lock washers, and flat washers. The inside distance of the legs should be approximately 48” (1.2M) Note that the tank fitting on the side of the tank should be towards the right side of the baler, opposite the ladder. Install the supplied rail support (001-6706CC) to the front side of the tank saddle using two 3/8”x1-1/4” bolts, lock washers, and flat washers.

3. Lift the tank assembly into place so it straddles the rear tension beam on top of the baler, near the end of the bale chamber. The tank legs should rest on the top corners of the bale chamber. Slide the tank as far forward as possible. With the tank slid as far forward as possible, attach the handrail to the rail support (001-6706CC) using the factory hardware. Clamp the legs to the sides of the bale chamber and drill two 9/16” (14mm) diameter holes per leg on each side of the bale chamber. Secure the legs to the chamber with (x4) 1/2” x 1-1/2” allen head bolts, flat washer, lock washer, and hex nut. Tank cap should be parallel to the ground.

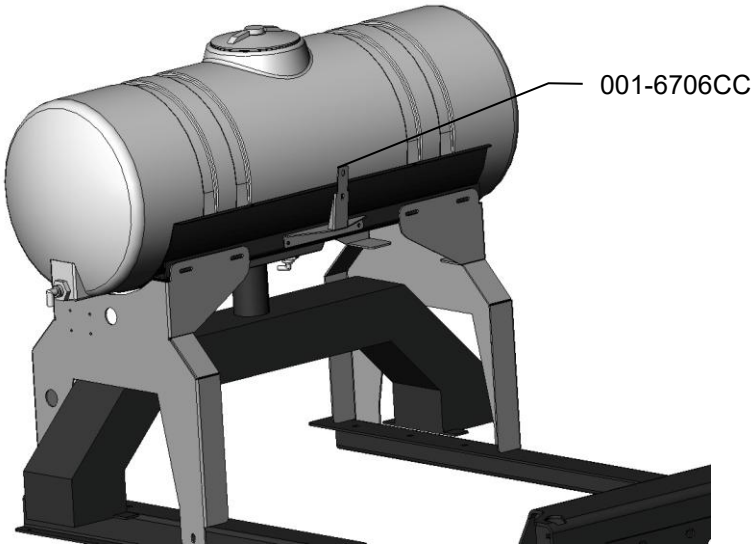

Claas 5300 Baler (030-0490CL-TK)

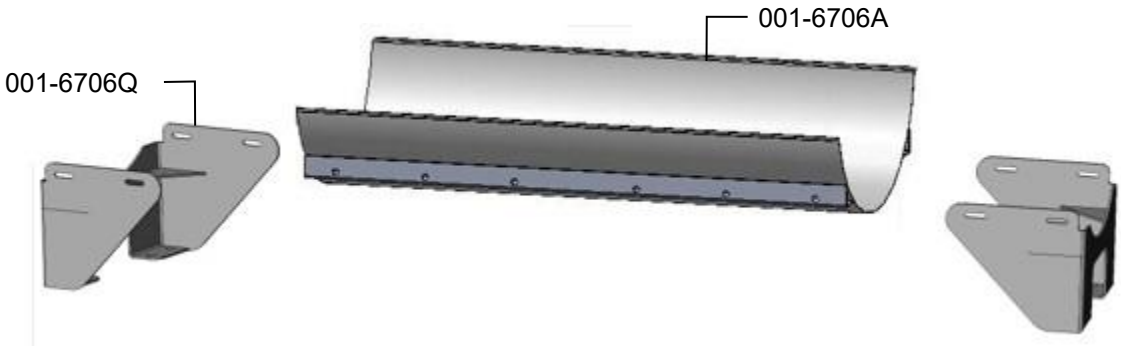

1. Locate parts bag 21. Install both saddle legs (001-6706Q) onto the saddle (001-6706A) with six 3/8” x 1-1/4” bolts, locks and flat washers. The mounting slots in the legs will attach to the second and third weld nuts in from each end, of the saddle, on both sides.

2. Once legs and saddle are loosely attached measure the distance from the top outside corners of the bale chamber where the saddle will be attached. Move legs in or out so the inside edges will match this dimension. Also try to center the saddle within these dimensions. <u>Do not fully tighten down bolts until unit is mounted on the baler.</u>

3. Four M10 weld nuts should be on the top of the baler on each side in location shown below. Line up saddle legs over these holes. Place two 10mm washers into the mounting holes of saddle legs. Secure legs to baler with M10 x 40mm bolts, lock washer, and two fender washers per hole.

100 Gallon Tank, Saddle & Legs Breakdown

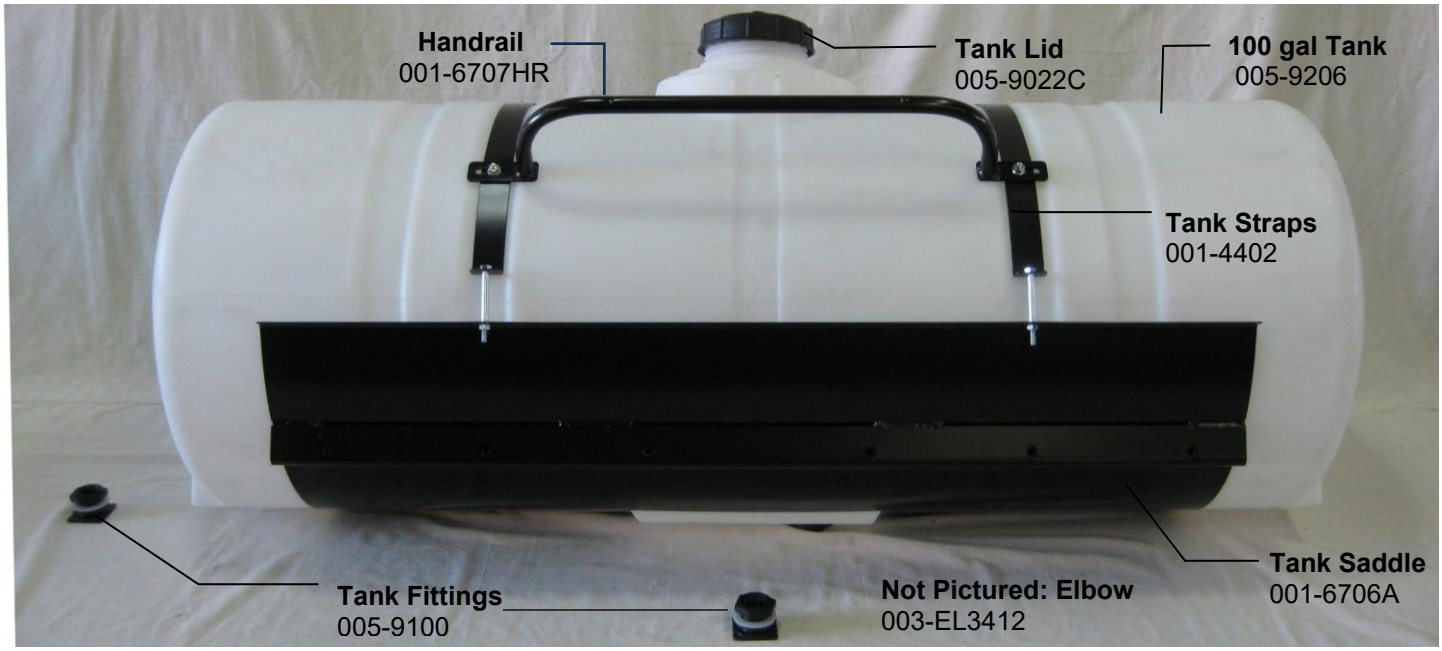

Claas 2100-2200 Baler
Saddle Legs (qty 2 needed)

Part#: 001-6706V

Complete Tank Saddle Kit
Part#: 030-0491V-TK

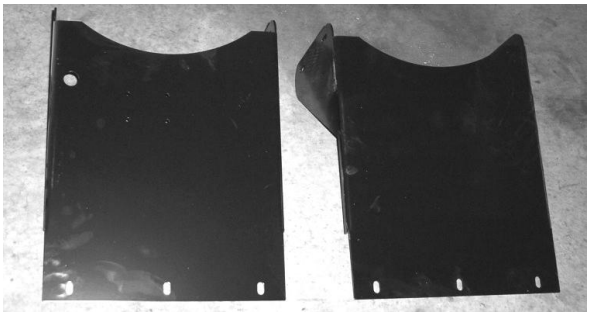

Claas 3200-3400, 5200
Saddle Legs (qty 2 needed)

Part #: 001-6706C

Complete Tank Saddle Kit
Part#: 030-0491CL-TK

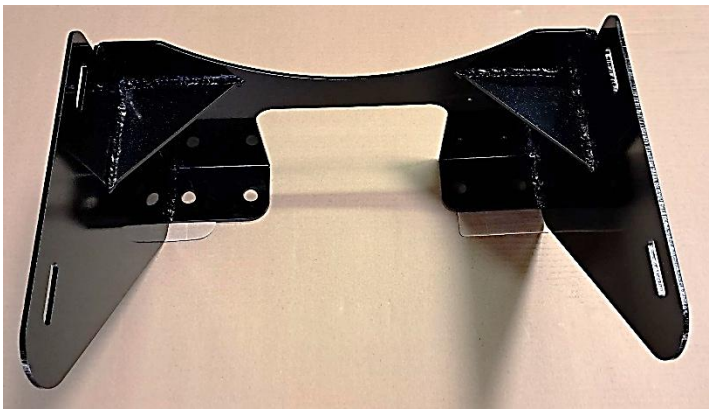

Claas 5300 Saddle Legs
Part #: 001-6706Q (qty 2 needed)

Complete Tank Saddle Kit
Part# 030-0490CL-TK

Pump Plate Assembly (PMP-7636P)

1. Attach (001-4648XB) Bracket to main saddle. Holes in bracket will line up with holes in main saddle. You may need to remove two of the bolts used to attach saddle to legs for bracket to fit. Reuse bolts to secure bracket to saddle and legs. Note some Krone and Claas balers will require you to mount the pump assembly facing the rear of the baler due to interference with balers compression ring. However, most models will be facing the knotters.

2. Connect control (006-7671LS) to pump plate (PMP-7636P) with four 10/32” x 5/8” Philips flat head screws and nylock nuts.

3. Attach triangle plug from flow meter to controls and rubber molded plug from pump to mating plug from control

4. Attach pump plate assembly (PMP-7636P) to bracket (001-4648XB) with two 3/8” x 3/4" flange bolts and nuts.

5. Locate parts bag 16. Locate elbow (003-EL3412) and thread into bottom of tank.

6. Locate parts bag that was with pump plate assembly and choose fitting to place in valve next to filter.

7. Run 1/2” hose from bottom of tank to valve on pump plate and secure with hose clamps.

8. Chose and thread fitting into pump discharge.

Note: Pressure washing the pump plate can lead to water damage internally of the ISO Pump Module (IPM).

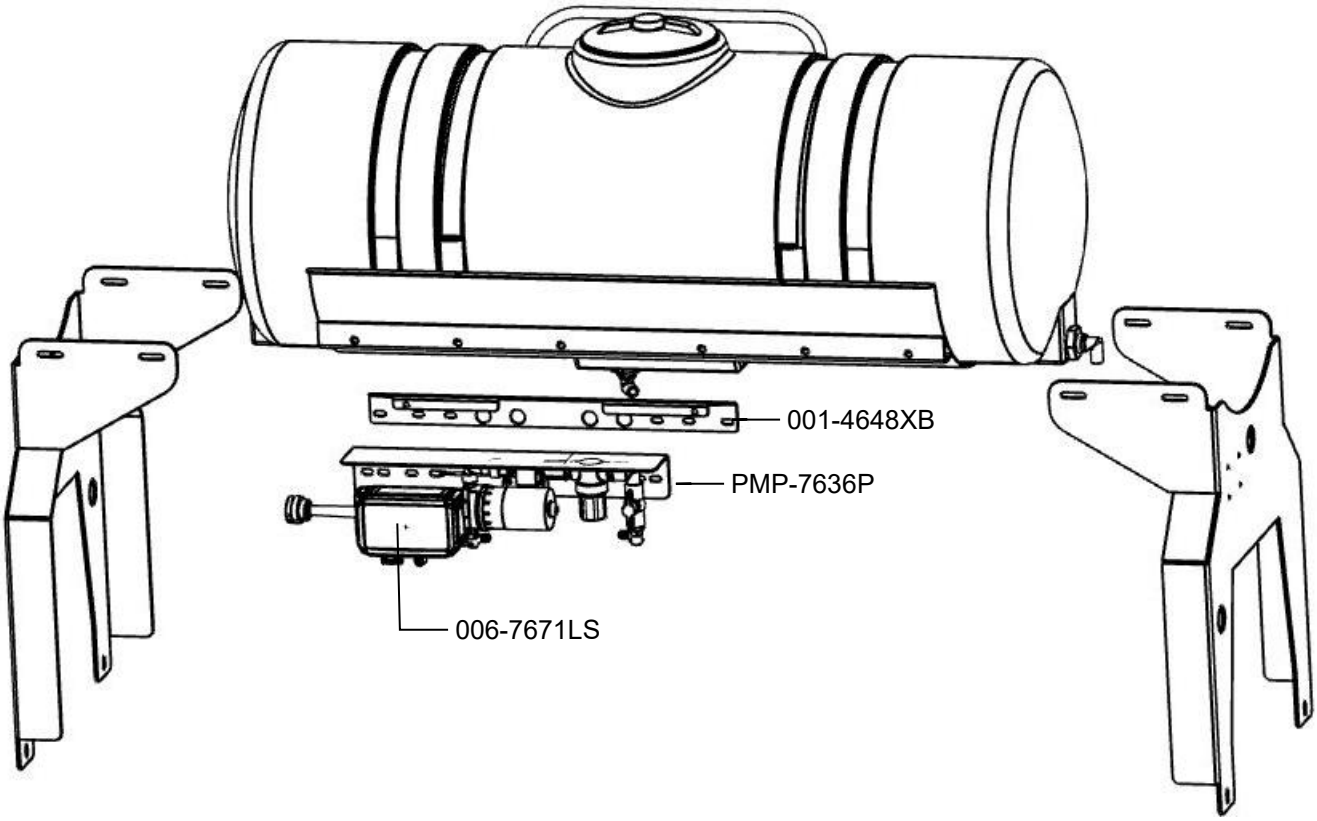

Parts Breakdown for Pump Assembly

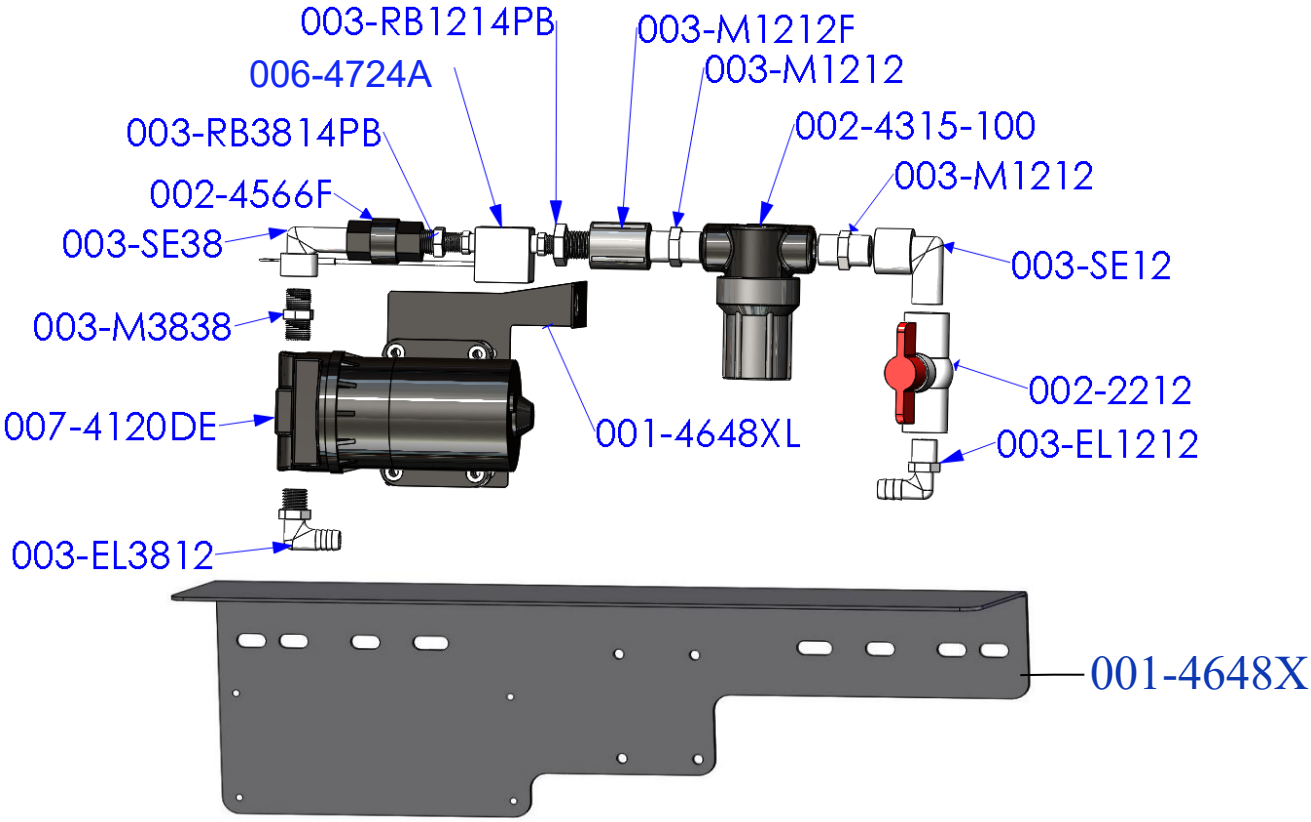

Part#	Description	Qty	Part#	Description	Qty
003-EL3812	3/8"MPT X 1/2"HB Elbow	1	003-M1212	1/2" Union	2
007-4120DE	700/300 Series Pump	1	002-4315-100	1/2" Line Strainer-100 Mesh	1
003-M3838	3/8" x 3/8" Union	1	003-SE12	1/2" Street Elbow	1
003-SE38	3/8" Street Elbow	1	002-2212	1/2" Ball Valve	1
002-4566F	3/8" Check Valve	1	003-EL1212	1/2"MPT x 1/2"HB	1
003-RB3814PB	RB 3/8" x 1/4" Reducer	1	001-4648XL	300 Pump Support	1
006-4724A	Flow Meter-Deutsch Plug	1	001-4648X	Pump Plate Mount	1
003-RB1214PB	RB 1/2" x 1/4" Reducer	1	003-A1212*	1/2" MPTx1/2"HB(Not Pictured)	1
003-M1212F	1/2" Coupler	1	003-A3812*	3/8" MPTx1/2"HB(Not Pictured)	1

*Note: Due to alternative baler designs, elbow 003-EL3812 can be replaced by straight fitting 003-A3812. Elbow 003-EL1212 can also be replaced by straight fitting 003-A1212. Both straight fittings are included.

Filter Bowl Replacement Parts

002-4315F	Filter Bowl
002-4315D	Filter Bowl Gasket
002-4315A	Replacement Screen-100 Mesh
002-4315B	Replacement Screen- 80 Mesh

Pump Plate Mounting – PMP-7636SMT

001-4648XB	Pump Plate Mount Adapter

Completed Assembly – PMP-7636P

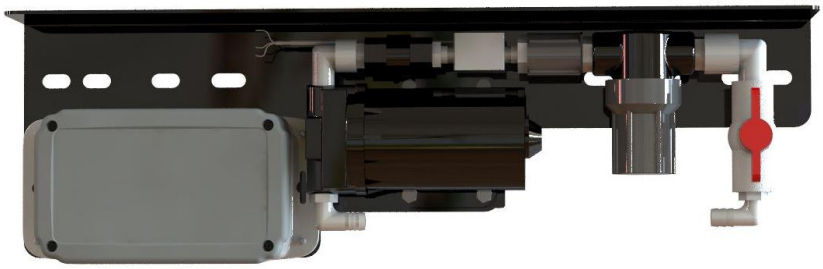

Installation of the Drain/Fill Line

1. Locate parts bag 1.
2. Thread 3/4” elbow fitting into end of tank.
3. Run hose from the elbow down the frame to the bottom of the baler.
4. Drill 1/4” (7mm) holes to accept the valve holder bracket and use 5/16” x 1” self-tapping screws.
5. Connect valve assembly to other end of hose. Place hose clamps on both ends.
6. Secure hose to frame using cable locks.
7. Install supplied safety decals (DCL-8001 & DCL-8005) next to the ball valve assembly.

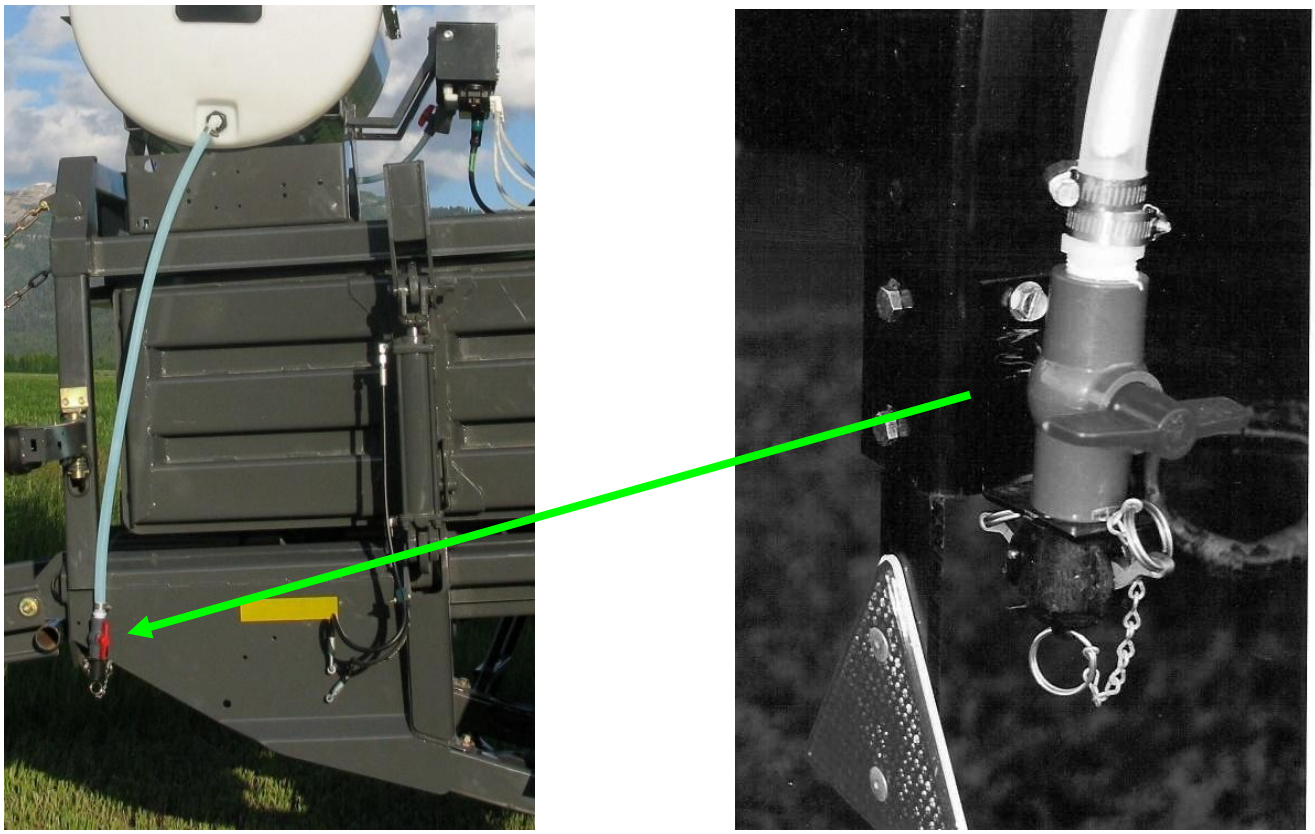

Parts Bags Breakdowns – Drain Fill Kit and Hoses

PBA-1

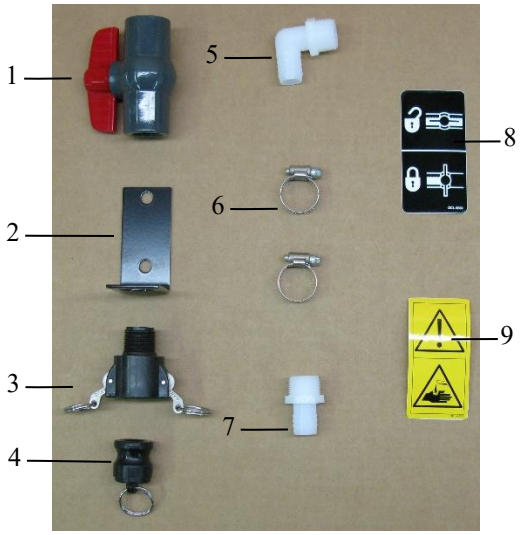

PBP-16

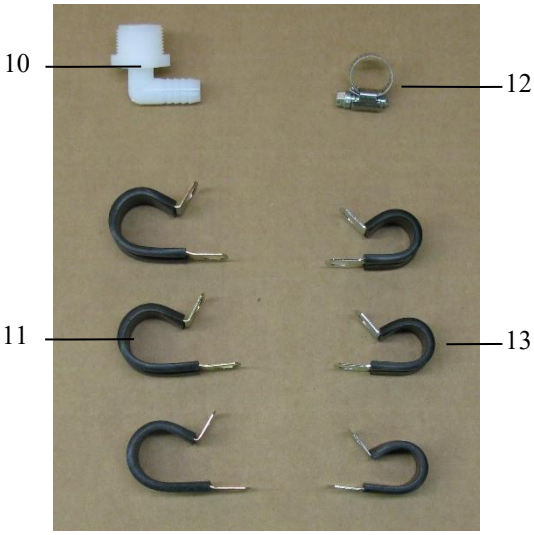

Ref	Description	Part #	Qty
1	3/4" Ball Valve	002-2200	1
2	Valve Holder	001-6702H	1
3	Female Coupler	002-2204A	1
4	Male Shut-Off Plug	002-2205G	1
5	3/4” x 3/4" Elbow	003-EL3434	1
6	#10 Hose Clamp	003-9004	2
7	3/4" x 3/4" Straight Fitting	003-A3434	1

Complete Drain Fill Kit 030-0493DFK
(Includes 3/4" tubing below)

Ref	Description	Part #	Qty
8	Valve Decal	DCL-8004	1
9	Hazard Decal	DCL-8001	1
10	3/4" x 1/2" Elbow	003-EL3412	1
11	3/4" Jiffy Clip	008-9010	3
12	#6 Hose Clamp	003-9003	1
13	Small Jiffy Clip	008-9009	3

Hoses

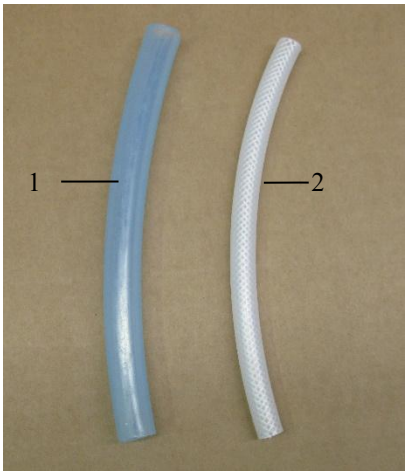

Ref	Description	Part#	Qty
1	1/2” Hose (Tank to Solenoid)	002-9001	30’
2	1/4" Hose (Solenoid to Tips)	002-9016	5’
NP	3/4" Hose (Drain/Fill Line)	002-9002	10’

Installation of the Spray Shield

The spray shield assembly is designed to spray the hay evenly as the baler picks it up. Optimal fan spray pattern will have a 50% overlap in the center of the pickup. A sketch of the spray shield nozzle holder placement and installation instructions are shown below for your baler's installation kit.

Installation Kit 4499C – Claas 2200

Install the spray shield-mounting bracket between the two flat vertical plates above the rotor as indicated in the picture to the right. Use the existing bolt holes with the hardware from the applicator kit to mount the spray shield bracket to the baler. Fasten the spray shield onto the spray shield bracket already mounted. Route hoses along the spray shield bracket towards the right side of the baler. Avoid moving parts when routing the hoses and do not fasten hoses to any hydraulic lines.

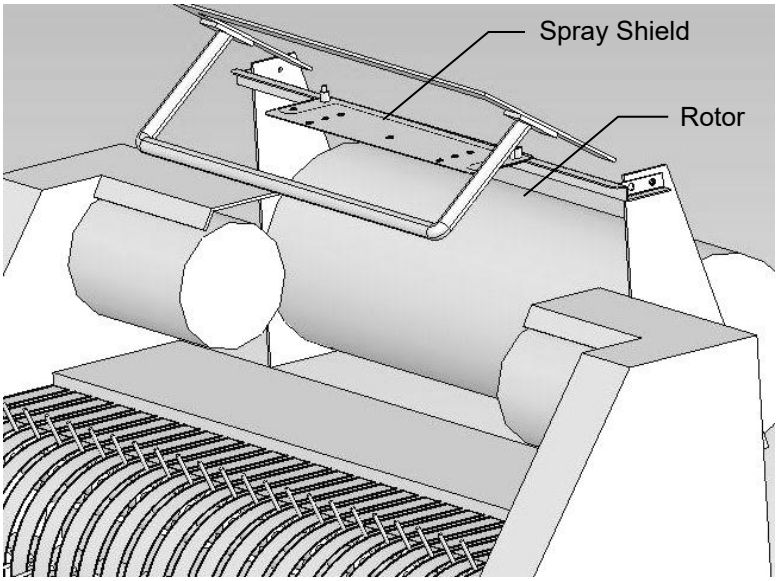

4499C Installation Kit Breakdown

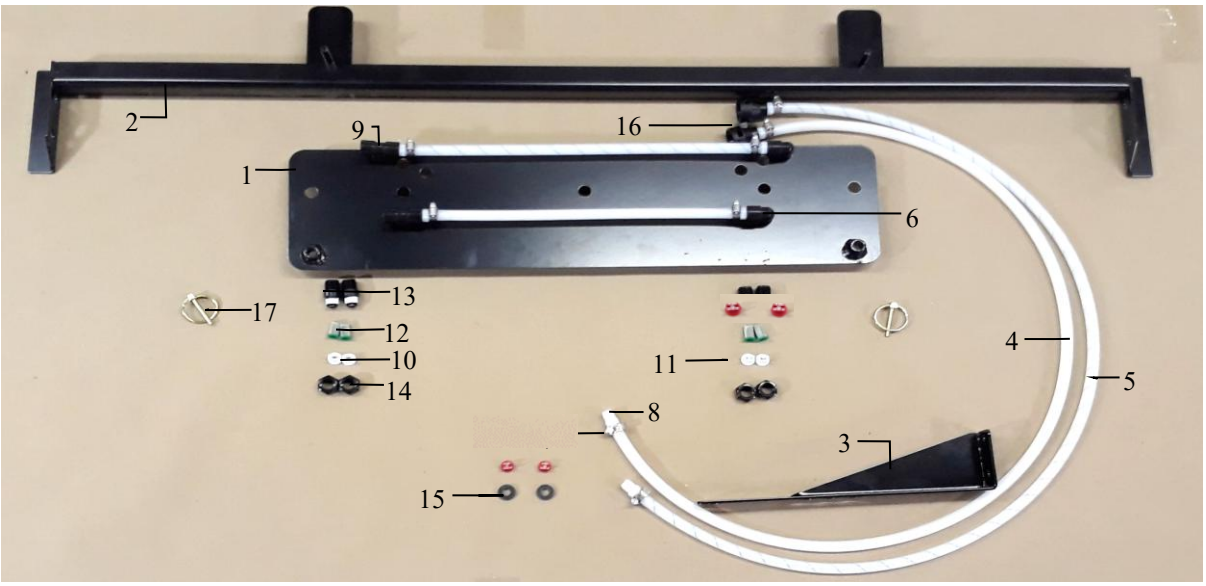

Ref	Description	Part #	Qty	Ref	Description	Part #	Qty
1	Spray Shield	001-4439A	1	10	1/4" Tip	004-XR11008VK	2
2	Spray Shield Holder	001-4440	1	11	1/4" Tip	004-XR11004VK	2
3	End of Bale Bracket	001-4648	1	12	Tip Strainer-100 Mesh	004-1203-100	4
4	1/4" Braided Hose	002-9016	5	13	Nylon Nozzle Body	004-4722	4
5	1/4" Braided Hose - Blue	002-9016B	5.5	14	Nylon Nozzle Cap	004-4723	4
6	1/4" 90 Deg. Elbow	003-SE14F	2	15	Rubber Washer	004-1207W	2
7	Mini Hose Clamp	003-9002	8	16	Female Quick Connect	004-1207H	2
8	1/4" x 1/4" Straight Fitting	003-A1414	8	17	3/16" Lynch Pin	008-4576	2
9	1/4" Tee Fitting	003-TT14SQ	2				
					Complete Installation Kit	**030-4499C**	

Installation Kit 4509C – Claas 2100

Locate the curved tube above the auger and rotary cutting system. Attach Shield holder (001-4440A) using the four supplied U-bolts, nuts, flat and lock washers. Slide shield back as far as the baler will allow and tighten down all mounting hardware. Install spray shield (001-4810) and use the two lynch pins (008-4576) to secure. Route hoses along the spray shield bracket towards the right side of the baler. Avoid moving parts when routing the hoses and do not fasten hoses to any hydraulic lines.

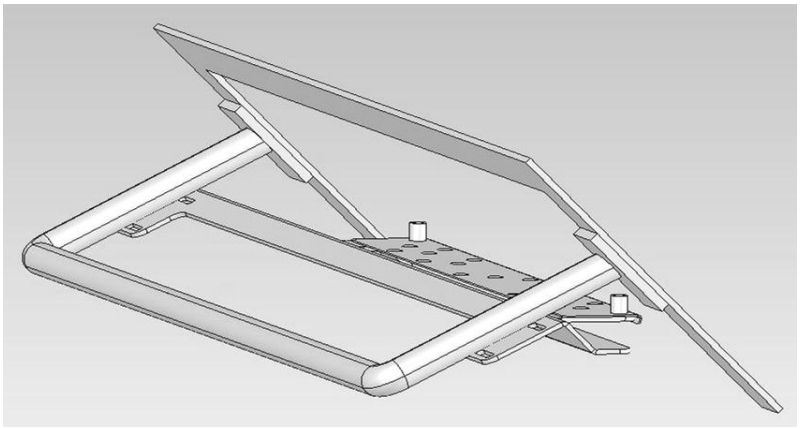

4509C Installation Kit Breakdown

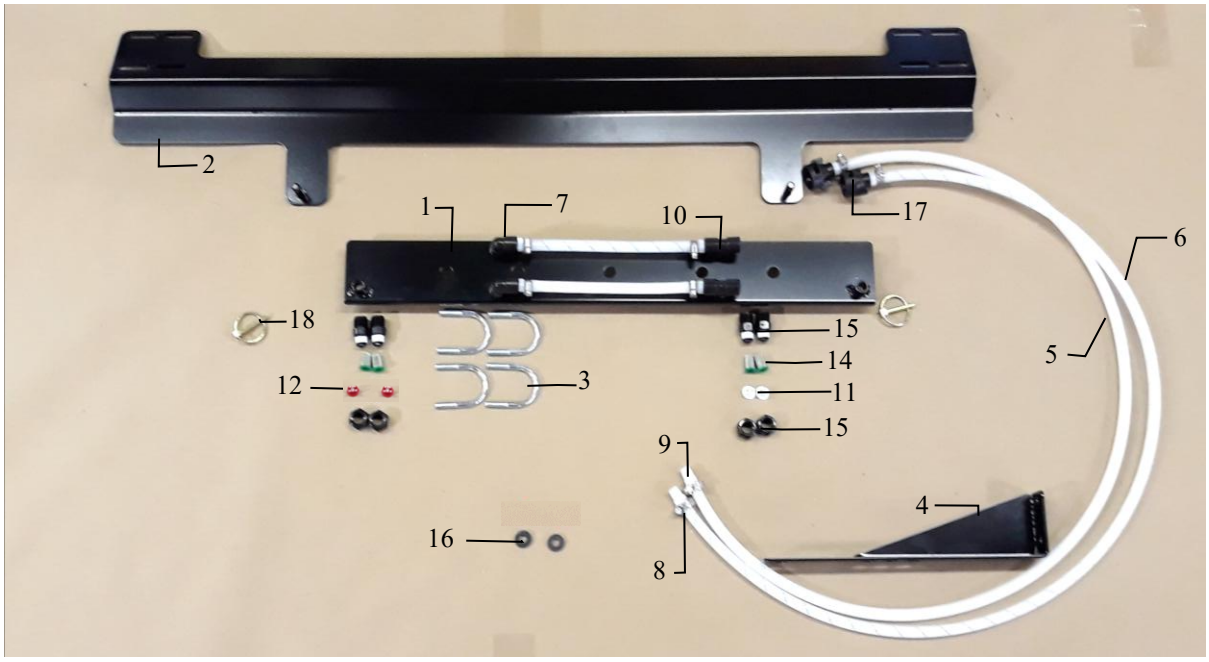

Ref	Description	Part #	Qty	Ref	Description	Part #	Qty
1	Spray Shield	001-4810	1	10	1/4” Tee Fitting	003-TT14SQ	2
2	Spray Shield Holder	001-4440A	1	11	1/4” Tip	004-XR11008VK	2
3	U Bolt	001-4714UBS	4	12	1/4” Tip	004-XR11004VK	2
4	End of Bale Bracket	001-4648	1	13	Tip Strainer-100 Mesh	004-1203-100	4
5	1/4” Braided Hose	002-9016	5	14	Nylon Nozzle Body	004-4722	4
6	1/4” Braided Hose – Blue	002-9016B	5	15	Nylon Nozzle Cap	004-4723	4
7	1/4” 90 Deg. Elbow	003-SE14F	2	16	Rubber Washer	004-1207W	2
8	Mini Hose Clamp	003-9002	6	17	Female Quick Connect	004-1207H	2
9	1/4” x 1/4” Straight Fitting	003-A1414	6	18	3/16” Lynch Pin	008-4576	2

Complete Installation Kit **030-4509C**

Installation Kit 4537C – Claas 2300-3300 and Claas 5200-5300

The spray shield holder (001-4435L) is centered on the L-shaped bracket above the rotor and secured with 3/8”x1-1/4” hex bolts, 3/8” lock washers, and 3/8” nuts (x3). The spray shield is then pinned in place with the lynch pins. Route hoses along the spray shield bracket towards the right side of the baler. Avoid moving parts when routing the hoses, and do not fasten hoses to hydraulic lines.

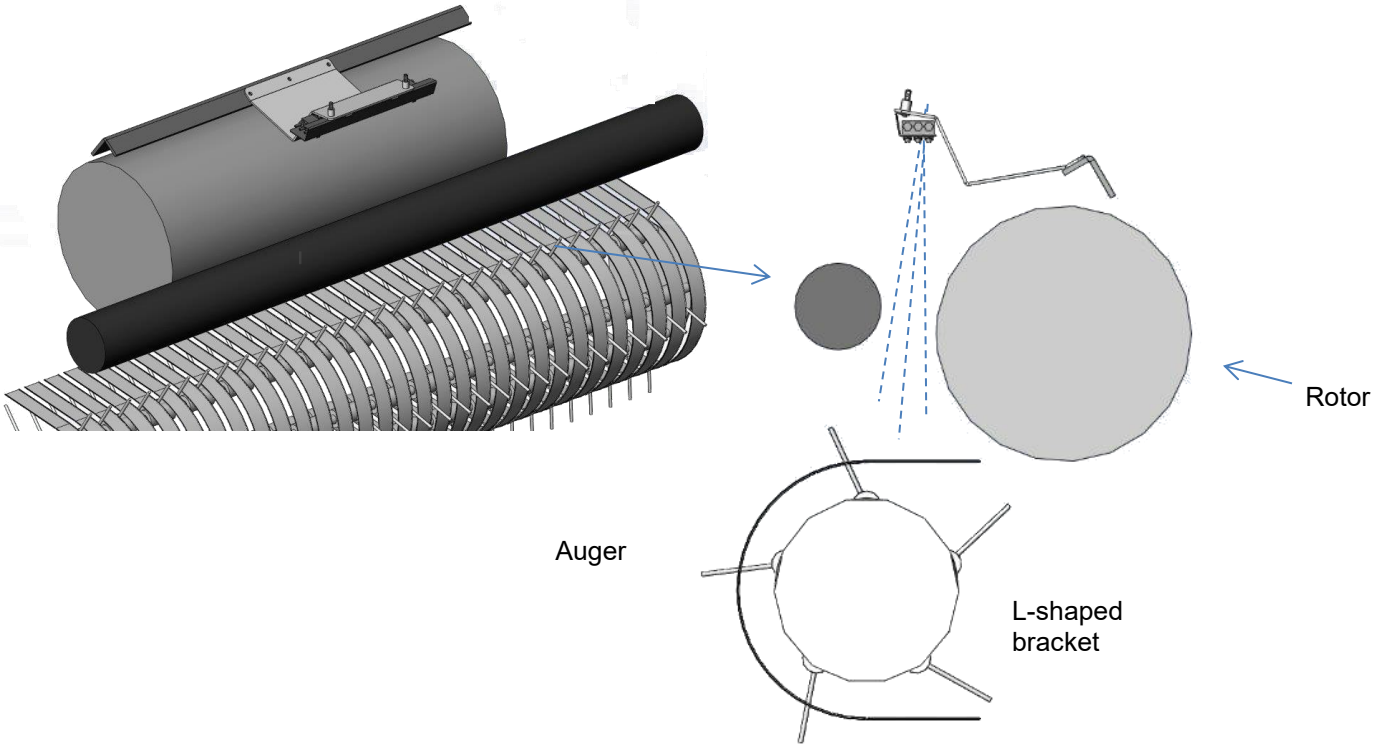

4537C Installation Kit Breakdown

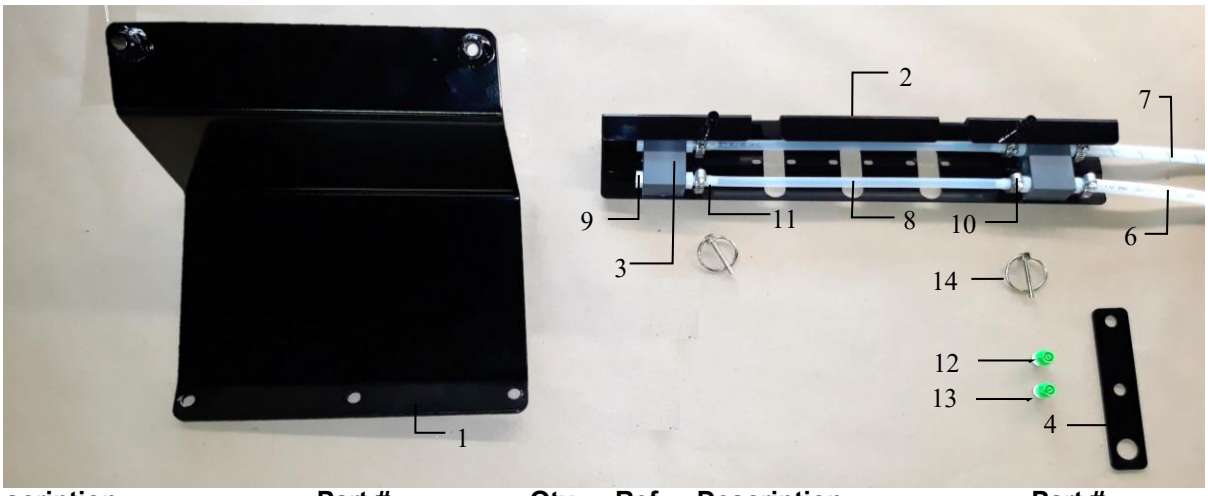

Ref	Description	Part #	Qty	Ref	Description	Part #	Qty
1	Spray Shied Holder	001-4435L	2	9	1/4” Hex Plug	003-F14	2
2	Spray Shield	001-4435NSX	1	10	Mini Hose Clamp	003-9002	4
3	Spray Shield Block	001-4435NSB	2	11	1/4” x 1/4” Straight Fitting	003-A1414	8
4	Claas End of Bale Bracket	001-4648C	1	12	1/4” NPT Tip	004-T8008-PT	2
NP	Female Quick Connect	004-1207H	2	13	1/4" NPT Tip	004-T8004-PT	2
NP	Rubber Washer	004-1207W	2	14	3/16” Lynch Pin	008-4576	2
6	1/4” Braided Hose	002-9016	4				
7	1/4” Braided Hose - Blue	002-9016B	4		**Complete Installation Kit**	**030-4537C**	
8	1/4" EVA Tubing	002-9006	3				

Installation of Solenoids and Hose Routing

A. Once Spray Shield is mounted, locate the Solenoid Kit SOL-3SP-LS. Pulsing Solenoids 002-2203F comes pre-installed on the Solenoid Mount Plate (001-4648DSH). Mount this assembly in an accessible location as close as possible (max distance 3ft) to the Spray Shield. This will ensure the most precise application of the preservative.

Pulsing Solenoids
002-2203F

Solenoid Harness
006-3650-S1

Solenoid Mount
001-4648DSH

B. Once solenoid bracket mounted, streamline solenoid harness 006-3650-S1 along baler back to connection on main baler harness 006-765B2 once installed. Ensure that the solenoid with <u>white dot</u> attaches to 'SOL 1' and solenoid with <u>blue dot</u> attaches to 'SOL 2' harness connection ports. Ensure wire routing does not interfere with any moving parts or hydraulic lines, securing harness as needed.

C. Route 1/2" hose along the path or similar, inside of the baler from the pump plate to the solenoid plate, as shown in picture above. Keep hoses away from moving parts and hydraulic hoses. When all hose connections are made to the tank, pump, solenoids, and spray shield secure with existing cable clamps or use cable ties.

D. Connect 1/4" reinforced hoses from Spray Shield to Solenoids. Note: Ensure solenoid with white dot connects to white hose/white spray shield dot. Hose with blue stripe connects to solenoid with blue dot.

Tip Connections

Dot Color	Tip	Hose Color	Position on 006-765B2
White Dot	8004 or 11004	White	Sol 1
Blue Dot	8008 or 11008	Blue Stripe	Sol 2

700 Solenoid Package for Large Square Balers

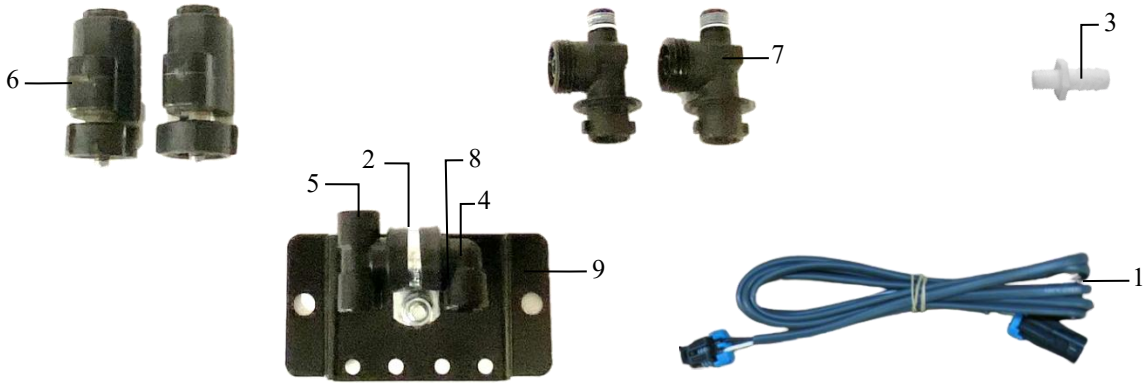

Ref	Description	Part #	Qty	Ref	Description	Part #	Qty
1	Solenoid Harness (5')	006-3650-S1	2	6	Solenoid	002-2203F	2
2	Hose Clamp #6	003-9003	1	7	Solenoid Valve Body	004-1207VF	2
3	1/4" x 1/2" Straight Fitting	003-A1412	1	8	1/4" Nipple	003-M14	1
4	1/4" Elbow	003-SE14F	1	9	Solenoid Holder	001-4648DSH	1
5	1/4" Tee Fitting	003-TT14SQ	1	NP	O-Ring Kit (Replacement)	002-2203FG	2
					Complete Assembly	SOL-3SP-LS	

Expanded View of Pulsing Solenoid (002-2203F)

Replacement Pulsing Solenoid O-Ring Kit available (002-2203FG)

(Includes EPDM O-Rings 6, 8, 9 shown below)

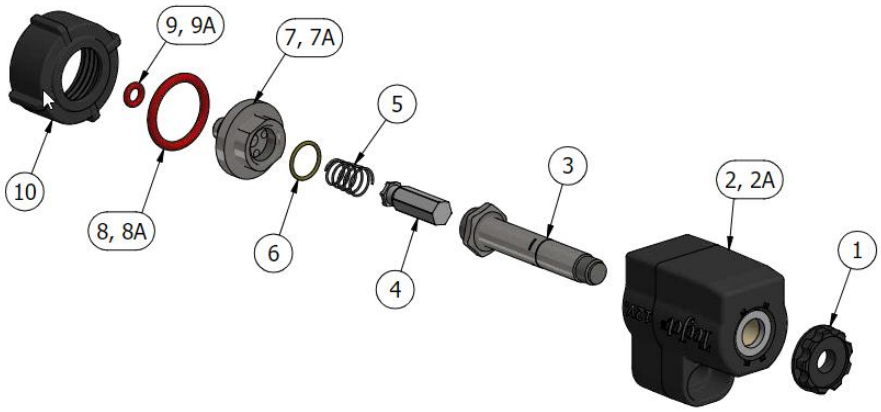

To clean solenoid valves:

The Center Section can be removed from Housing #2 by loosening #1 from #3. Once removed, use wrenches on components #3 and #7 and gently turn to loosen and separate. Soak parts #3-10 in warm soapy water, clean with a soft bristle brush, rinse with clean water to remove buildup before reassembly.

Main Wire Harness Routing and Connections

Route harness 006-765B2 along path shown above (or similar) either on top of or inside of the baler from the pump plate to the hitch of the baler. Note: the end of the harness that has the large plug with sockets and the white heat shrink label, will be at the hitch of the baler. The other end attaches to plug on pump plate. Keep harnesses away from moving parts and hydraulic hoses. Secure harness in suitable locations as needed.

Identification on plugs of Main Baler Harness 006-765B2

Sol 1 and Sol 2 Plugs attach to the solenoids with two 006-3650-S1 harnesses. Sol 1 attaches to the solenoid with a white dot. Sol 2 attaches to the solenoid with a blue dot.
EOR Plug (End of Row) is for the optional Crop Eye Forage Indicator kit. (474C)
CAN/IDM Plugs are for use with optional Moisture Dye Marking kit. (740DM), ISOBUS integration with compatible balers, future expansion, or CAN termination. Only one CAN/IDM port requires a connection for termination. Dye Marker or baler ISO integration harness has a port for terminator connection on them.
EOB Plug is for the (End of Bale) sensor that is attached by the needle arm.
Secure with existing cable clamps or use cable ties when all connections are made.

Control Modules and Wiring Harnesses

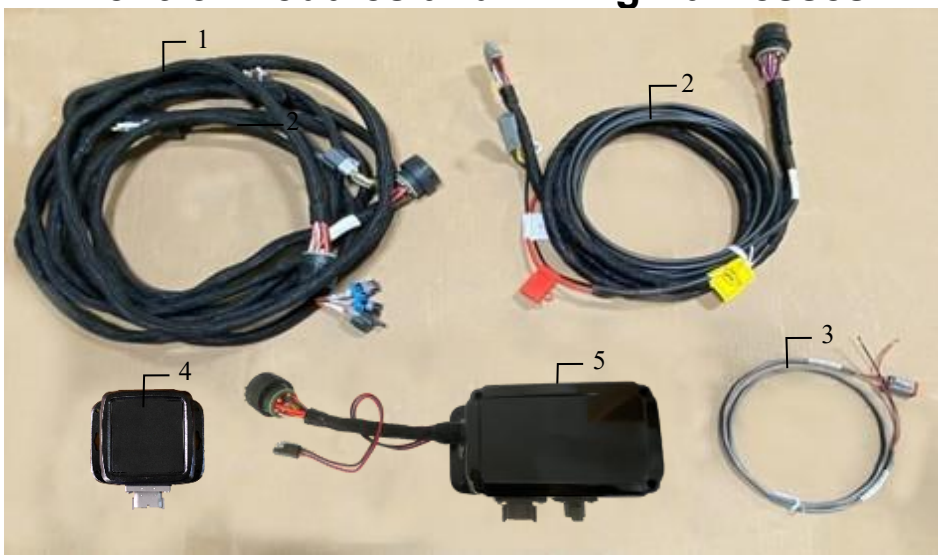

Ref	Description	Part#	Qty
1	Power Lead Baler 35'	006-765B2	1
2	Power Lead Tractor	006-765IC	1
3	Key Switch Wire	006-765CPH	1
4	ISO Pump Module (IPM)	006-7671LS	1
5	ISO Communication Module (ICM)	006-6673	1
NP	Dust Plug Kit	006-765DP	1
NP	120 Ohm Resistor (For use as non-ISO integrated units)	006-700R	

Ref	Description	Part#	Qty
NP	Baler Integration Harness	006-765VA	1
NP	Baler Integration Extension (Required only for pre-2012 Agco Balers)	006-6650VAX	1
NP	Baler Integration Harness (Krone Balers Only)	006-765VAK	1
NP	Baler Integration Harness (Krone Gen. 5 Balers Only)	006-765VAK2	1
NP	USB-C to USB-A Comm.Cable (Optional use for tablet connection)	006-6672USBX	

Star Wheel Moisture Sensor Kit

1. Locate spacer plates (001-6707ES), both star wheel moisture sensors (030-4642U / UE), twine diverters (001-4644H / 4645H) and hardware parts bag.
2. The star wheels will be placed as close to the knotter as possible. Follow installation instructions for your specific baler model.
3. Install with four (two per side) 5/16” x 3-1/4” Allen buttonhead cap screws. Make sure the Allen heads are in the bale chamber side of the star wheel.
4. The star wheel with the 6-position plug will need to be placed on the right side of the baler along with the twine diverter with two extra holes. 030-4642UE Star Wheel must rotate in the indicated clockwise direction as the bale moves thru the bale chamber. Reference the rotation indicator sticker on star wheel block.
5. The star wheel with the 2-postion plug will need to be placed on the left, or ladder side of the baler.
6. Place a spacer plate between each star wheel block and the bale chamber with twine diverter on top.
7. Secure spacer plates, star wheels and twine diverters to baler with 5/16” hex nuts and lock washers. Hand tighten with wrench or ratchet- not to exceed 13 ft-lb torque. **DO NOT USE AN IMPACT TO TIGHTEN.** Over torquing star wheel mounting hardware can cause pre-mature wear of the star wheel blocks.
8. Connect moisture harness (006-7307EM2 or 006-7307EM3) to both star wheels.
9. Route Moisture Harness (006-7303EM2 or 006-7307EM3) along top of baler, to the pump module located on the tank saddle at the back of the baler.
10. Attach rectangle plug of moisture harness to bottom of ISO pump module (IPM).

The following pages contain detailed instructions for specific baler make and models:

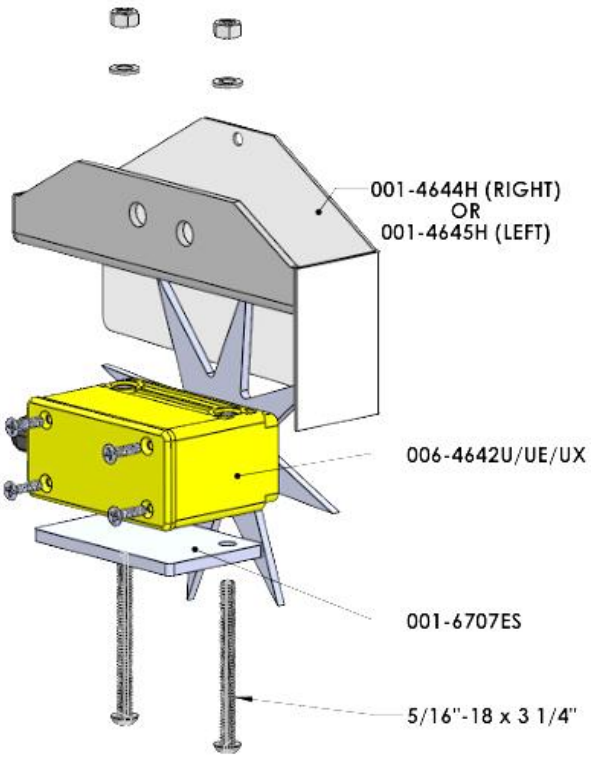

Star Wheel Sensors- 700 Series

For Large Square Balers – Reinforced Yellow Block 2026

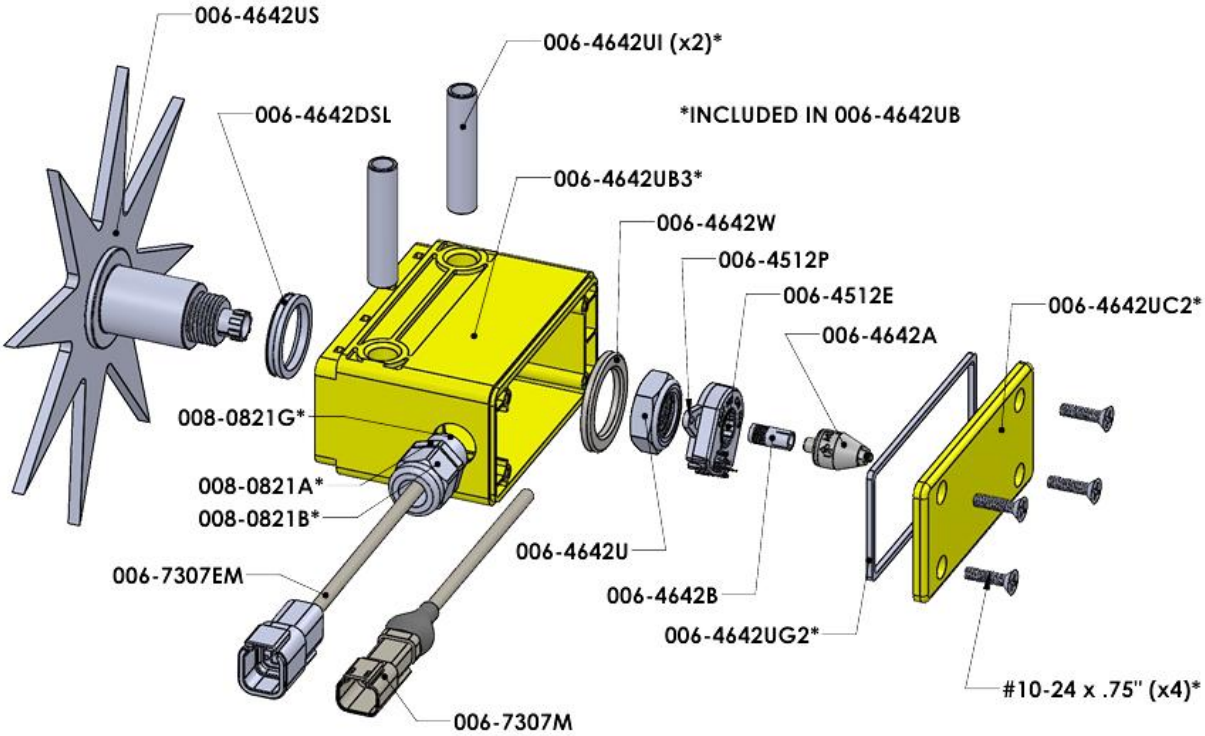

Description	Part#	Qty
Star Wheel (includes swivel insert)	006-4642US	1
Dust Seal Gasket	006-4642UG	1
Star Wheel Block Only	006-4642UB3	1
Star Wheel Block End Cap	006-4642UEC	1
Block Inserts	006-4642UI	2
Wire Compression Grommet	008-0821A	1
Grommet Locking Nut (internal)	008-0821B	1
Washer for Wire Grommet	008-0821G	1
Bearing Washer	006-4642W	1
Star Wheel Nut	006-4642U	1
Encoder Mount (030-4642UE only)	006-4512P	1
Encoder (030-4642UE only)	006-4512E	1
Swivel Insert	006-4642B	1
Swivel Insert	006-4642B	1
Electric Swivel	006-4642A	1
Electric Swivel	006-4642A	1
Star Wheel Block Gasket	006-4642UG2	1
Star Wheel Block Cover	006-4542UC2	1
Encoder Harness Plug (6 Pin) (030-4642UE only)	006-7307EM	1
Moisture Harness Plug (2 Pin) (030-4642U only)	006-7307M	1

Description	Part#	Qty
Star Wheel Spacer Plate (not pictured)	001-6707ES	1
Star Wheel Mounting Hardware (5/16" x 3-1/4" Allen Head Screws, nuts, locks and washers)		2
Twine Guard -Left	001-4645H	
Twine Guard -Right	001-4644H	
Star Wheel Drilling Template (optional)	001-4642T	
Replacement Star Wheel Block*	001-4642UB	
Complete Non-Encoder Star Wheel	**030-4642U**	
Complete Encoder Star Wheel	**030-4642UE**	
Moisture Harness- Standard (12' and 13' Section lengths)	006-7307EM2	
Moisture Harness- Long (16' and 18' section lengths)	006-7307EM3	
Complete Moisture Kit* -Standard	**MSH-LS-STD**	
Complete Moisture Kit*- Long	**MSH-LS-EXT**	

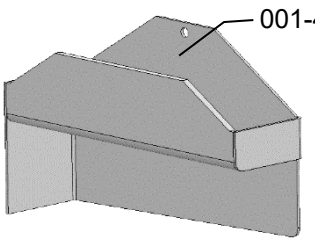

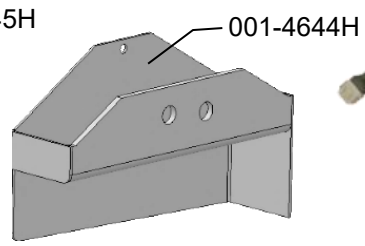

Complete Moisture Kits include encoder star wheel, non-encoder star wheel, left and right twine diverters and long or std. moisture harness.

Claas 2100 and 2200 Balers

Star Wheel Mounting – The star wheels are to be mounted on top of the baler, just behind the knotters and as far forward as possible. Remove the bale from the chute. Locate the wheels on the top outside corner angles of the bale chute, one on each side. Use the template located in the back of the manual as a guide for cutting the notch and mounting holes for the star wheels.

Mark the location of the notch 5/8” wide and 9” long (16mm x 23cm) and the location of the two 5/16” (8mm) holes for the star wheel base. After cutting the notch and drilling the hole, insert the 5/16” x 3-1/4” black Allen head bolts up through the chute. Place spacer plate and star wheel block over the bolts and install the twine guards. Secure with 5/16” lock washers and nuts. **The twine guard containing the extra two holes will be placed on the right side.**

.

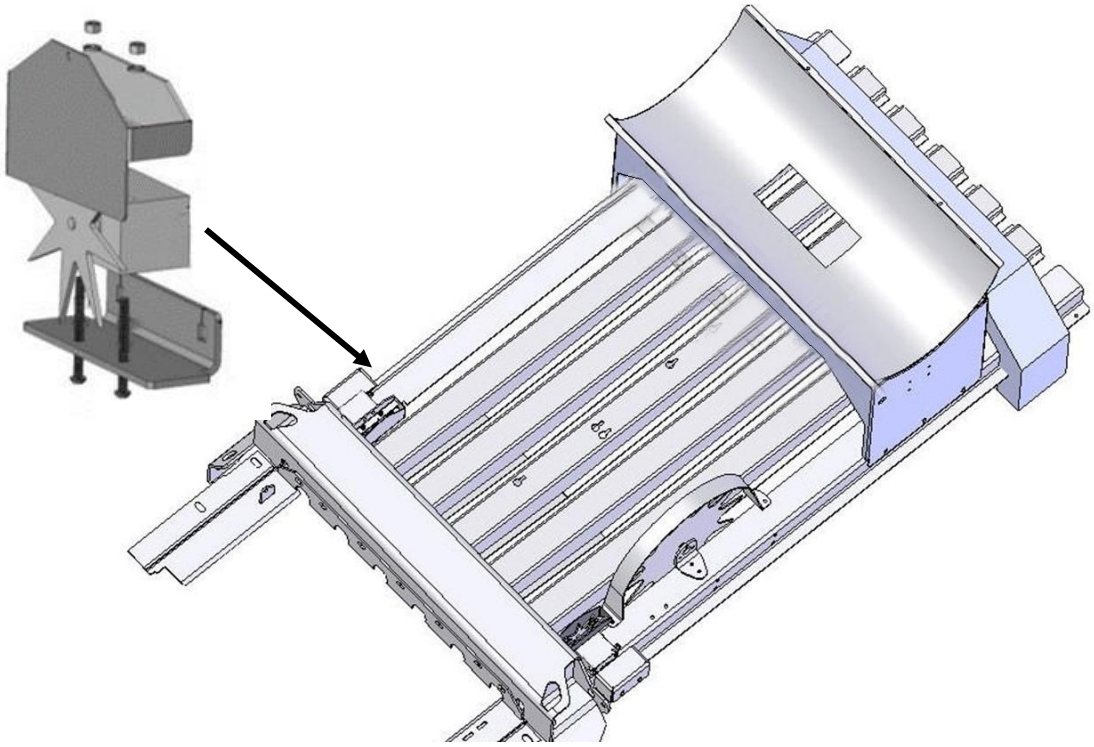

Claas 3200-3400 and 5200-5300 Balers

Star Wheel Mounting – Use the picture below as a guide for drilling the mounting holes for the star wheels. The star wheels are to be mounted on the side of the bale chamber, between the top and middle channel. Measure 10” back from the hinge between the top and middle channel. Use the star wheel template and guide for cutting the notch and mounting holes for the star wheels. Cut 1” x 9” (25mm x 23cm) slot for the star wheel. Make sure the wheel is square.

Mark the location of the two 5/16” holes for the star wheel base. After drilling the holes, insert the 5/16” x 3-1/4” allen head bolts through the chute. Place spacer plate and star wheel block over the bolts and install twine guards on each star wheel. Secure with 5/16” lock washers and nuts. **The twine guard containing the extra two holes will be placed on the right side.**

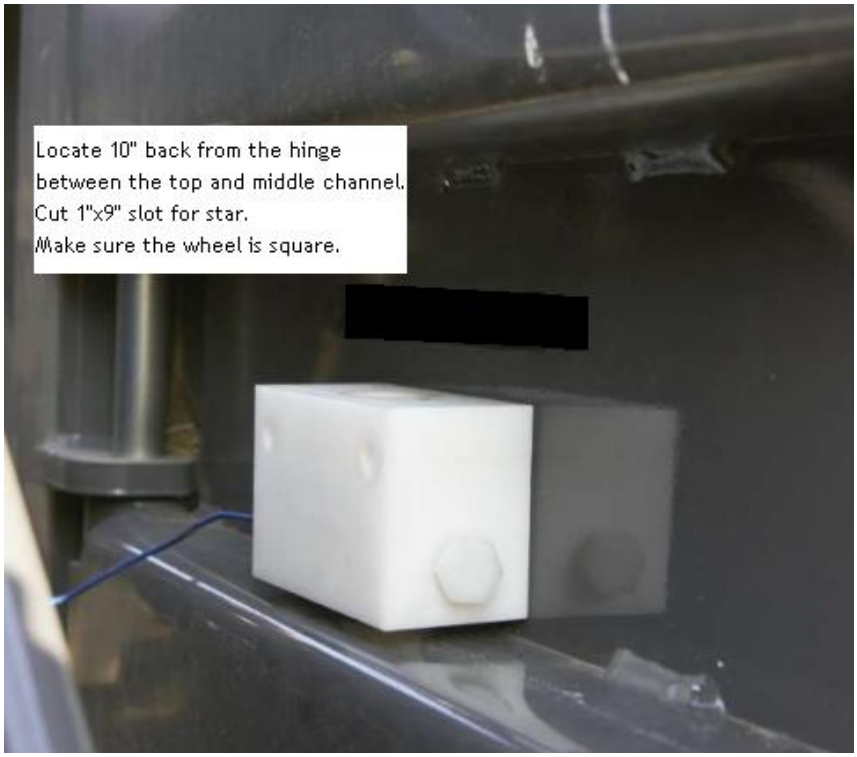

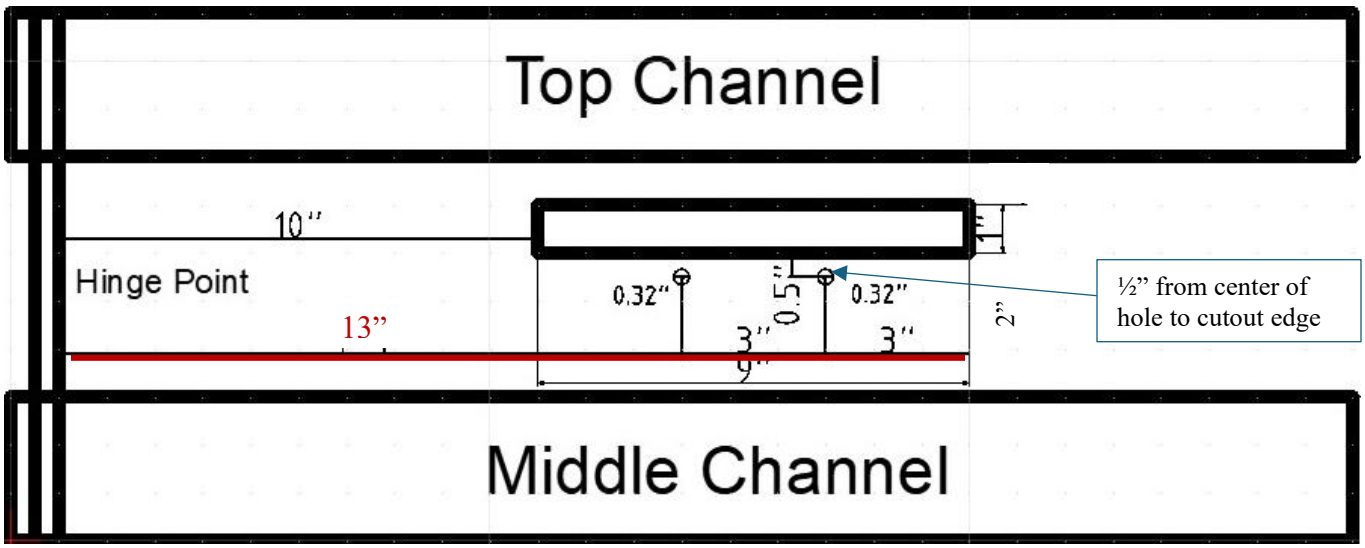

Star Wheel Installation Guide

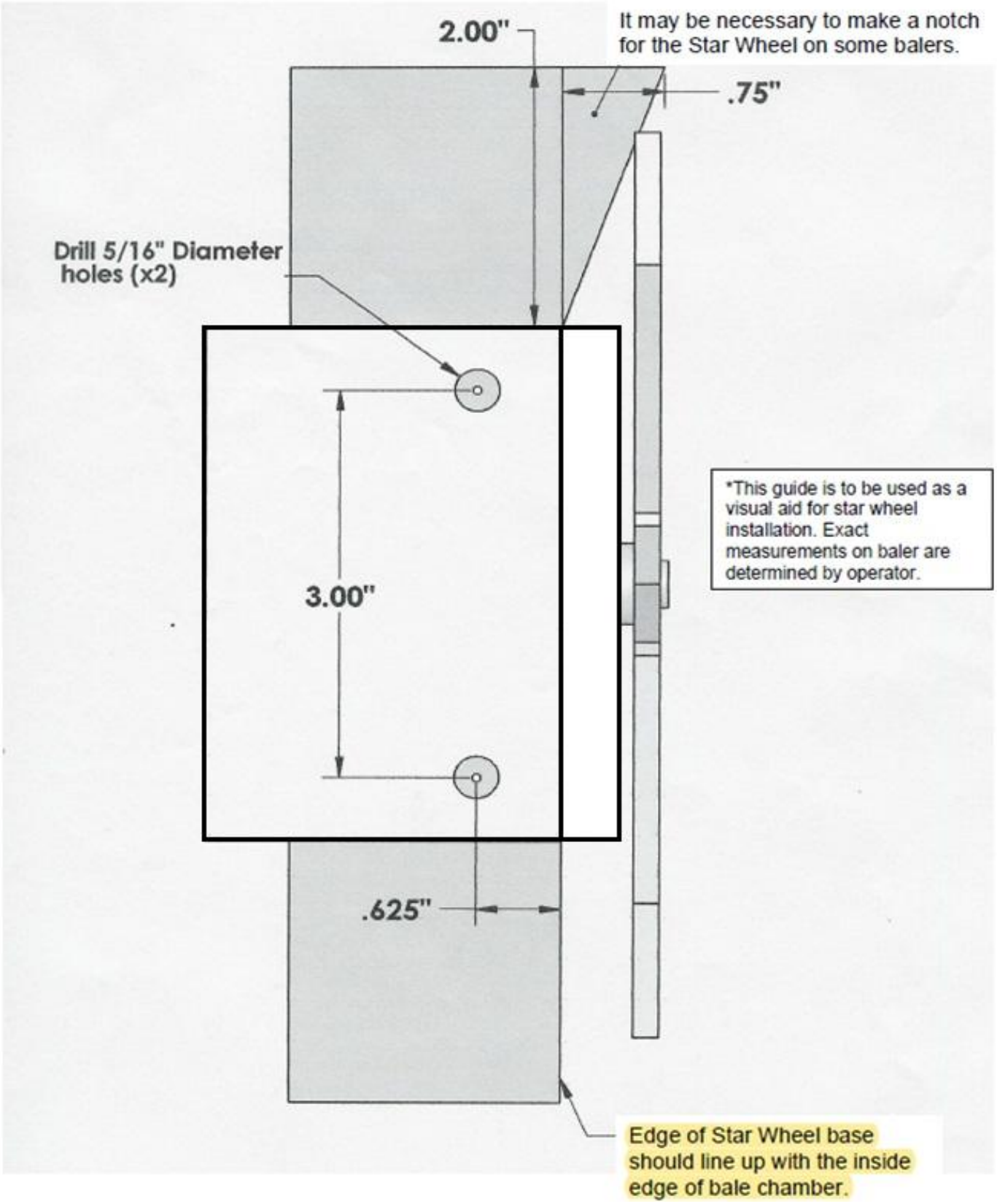

(this page left intentionally blank)

End of Bale Sensor (EOB) Installation

The End of Bale Sensor determines the position of the needles on the baler. When the needles cycle the sensor communicates this information to the controls. Installation of this sensor is required for use with the Harvest Tec job records. Reference “Sensor Settings” in Operation Manual. Follow the steps below for your baler to mount the sensor.

Claas 2100 Balers

End of bale sensor bracket (001-4648) will be used. Cutoff excess metal not used during installation.

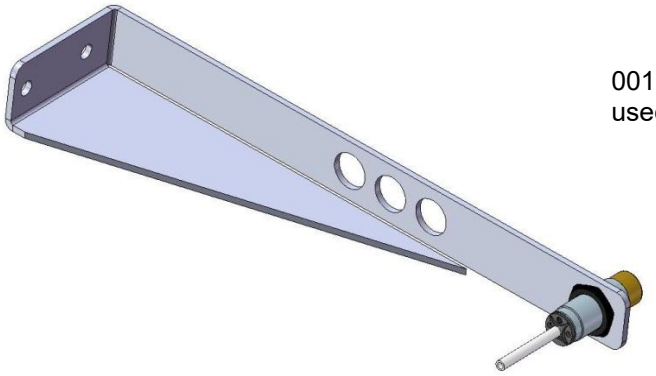

001-4648 with 12” (30cm) hole used for sensor

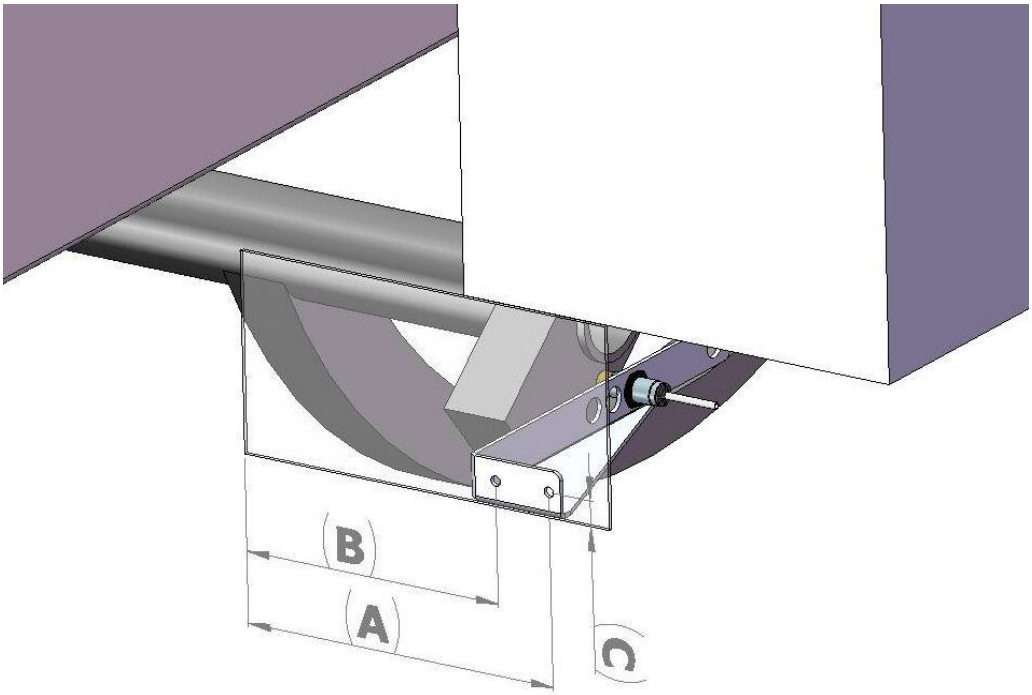

Sensor hole location	A	B	C
8” (20cm)	5-3/4” (13cm)	4” (10cm)	5/8” (16mm)

Mount the end of bale sensor bracket (001-4648) as shown. Mark and drill two 3/8” (10mm) holes and attach the bracket using two 5/16” x 1” self-tapping screws, and 5/16” flange nuts. Mount the sensor in the 8” (20cm) hole location, keep the sensor 1/4” (7mm) from the needle and tighten both nuts. Cut off excess metal past the sensor. Run the sensor cable up to the main harness (006-765B2) and attach to port labeled EOB.

Claas 3200-3400 and 5300 Balers

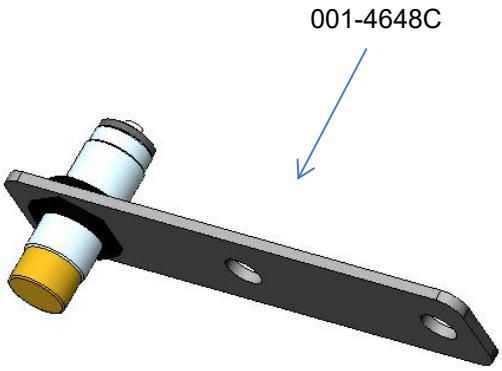

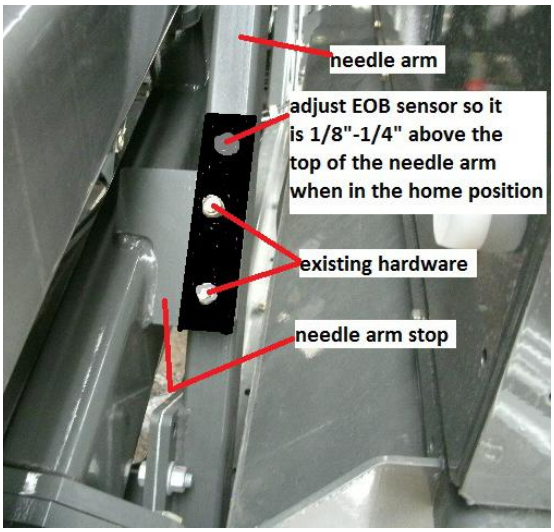

The end of bale (EOB) sensor mounts in the EOB bracket (001-4648C) as shown in the picture. The EOB bracket is mounted to the top side of the needle arm stop using the existing hardware that secures the bumper to the stop.

End of Bale Sensor

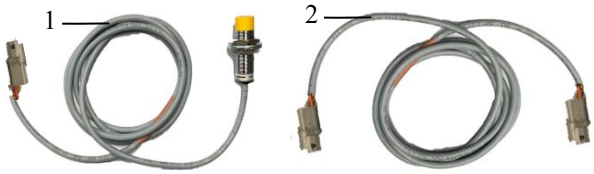

Ref	Description	Part #	Qty
1	End of Bale Sensor	006-7401	1
2	End of Bale Ext.	006-7401EXT	1

Tractor Setup

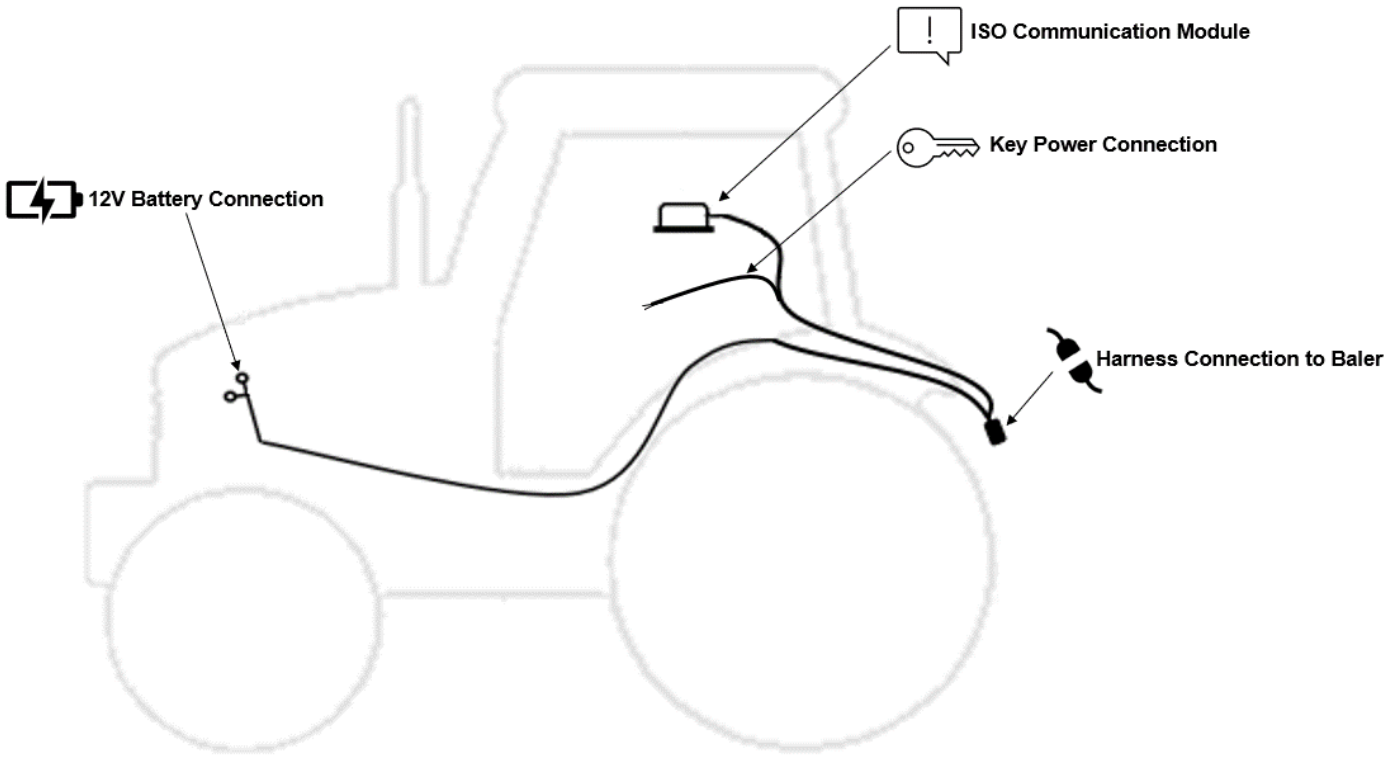

The general tractor setup of the 700 Series applicator can be seen above. The main harness of interest is the tractor power/communication harness (006-765IC). This harness will connect at the tractor battery, to the ISO Communication Module (ICM) mounted in the cab, a keyed power connection point (006-765CPH), and connect at the hitch area to the baler power/communication harness (006-765B2). View below to see highlighted installation instruction:

12V Battery Connection

The 12V battery connection must be at the tractor battery. Connection to alternative locations such as an accessory port can cause problems with applicator system.
MUST BE CONNECTED DIRECT TO TRACTOR BATTERY TERMINALS

ISO Communication Module

The ISO communication module is to be mounted inside the cab. Other mounting locations can lead to issues with weathering and operation. Once installed and the system is powered, a green light will turn on with the ICM module.

Key Power Connection

Ensure a solid keyed connection is found inside the cab and wired into. Poor keyed power connection can result in applicator system issues.

Harness Connection to Baler

The tractor harness connects at the hitch to baler power/communication harness (006-765B2). This will allow the system components to communicate with one another. Ensure connections are debris and corrosion free.

Display Options

Optional Harvest Tec Display

The 700 series Harvest Tec Display will allow you to set your real time baling parameters to ensure the most precise application to every bale. This is done by utilizing the improved touch technology to select objects, enter data, and swipe through operational screens.

The Harvest Tec Display offers easy integration by connecting to the additional CAN plug on the 006-765IC harness. Once, connected the Harvest Tec display will power up with applicator system.

Note: The Harvest Tec Display must be used as a standalone display, the baler cannot run both integrated and on the Harvest Tec Display. Must be one or the other. Removal of the 006-765VA or integration harness is required when equipped.

Optional Tablet Display

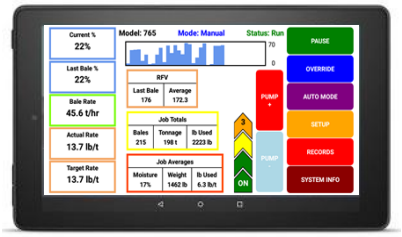

The iOS or Android Tablet displays offer the ability to communicate with the 700 series applicator system via hard-wired connection to the ISO Communication Module (ICM). Through the free Precision Baling App, the operator can set real time baling parameters to ensure the most precise application to every bale.

This provides a multi-use option while utilizing the improved app to select objects, enter data, and easily switch through operational screens. The Tablet Display offers easy integration by connecting a charging cable to the USB port on the ICM module. Once connected the Harvest Tec applicator will display upon opening the app and powering up the applicator system. Tablets can be used in addition to integrated baler VT display.

***Made for iPad®**
Required to be running the most current operating system or one version previous.
*iPad is a trademark of Apple Inc., registered in the U.S. and other countries.

Optional Harvest Tec Display Kit (030-7670DK)

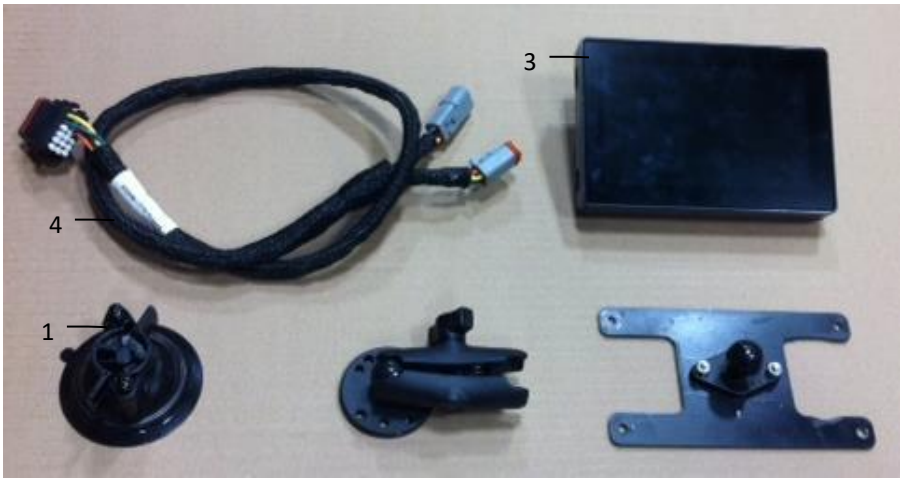

Ref	Description	Part #	Qty
1	Suction Cup Mount	001-2012SCM	1
2	Ram Mount	001-2012H	1
3	Harvest Tec Display	006-765GVT	1
4	Display Harness	006-765GH	1
5	Mounting Plate	001-700GH	1
NP	700 Series Resistor	006-700R	1

Complete HT Display Kit 030-7670DK

Installation Instructions

1. Connect 006-765GH harness connection to 006-765IC tractor harness key power plug.
2. Connect 006-765GH harness to the Harvest Tec VT Display before tightening mount in place.
3. Tighten the mounting and display. Streamline harness as necessary.
4. Once connected, power cycle the system and ensure display is working properly.

NOTE: CANNOT OPERATE APPLICATOR SYSTEM WITH HARVEST TEC DISPLAY AND BALER ISO INTEGRATION or TABLET/ iPad AT THE SAME TIME.

Optional Android Display Kit (030-1670DK)

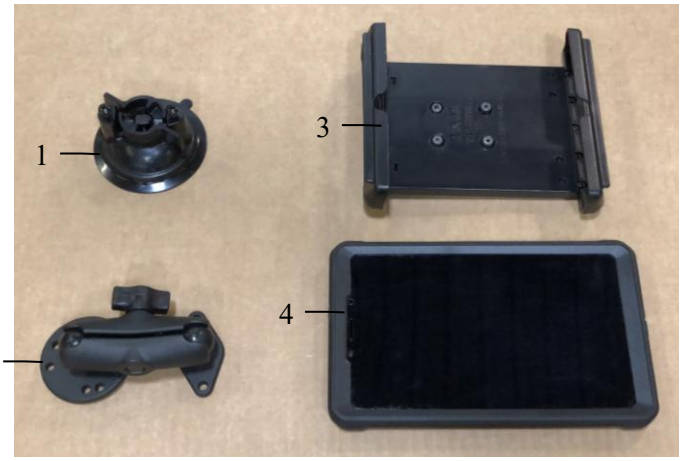

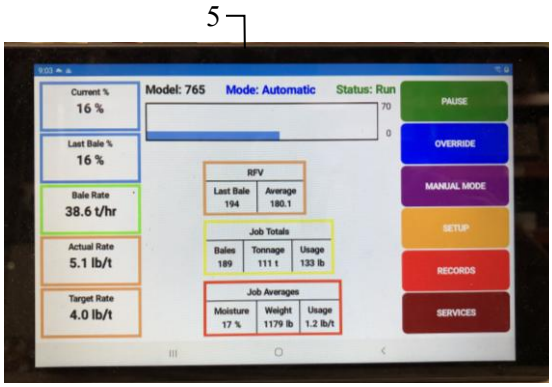

Ref	Description	Part #	Qty
1	Suction Cup Mount	001-2012SCM	1
2	Ram Mount	001-2012H	1
3	Spring Load Cradle	001-2012SLC	1
4	Android Case	001-2012A1	1
5	Android Tablet	006-1670AT	1
NP	USB-C to USB-A Cable	006-6672USBX	1

Complete Android Tablet Display Kit **030-1670DK**

Note: Use a quality communication cable ending with a USB-A connection to connect tablet to (006-765ICM) control module - plug into the USB port showing a tablet.

Optional iPad Display Kit (030-6670DK)

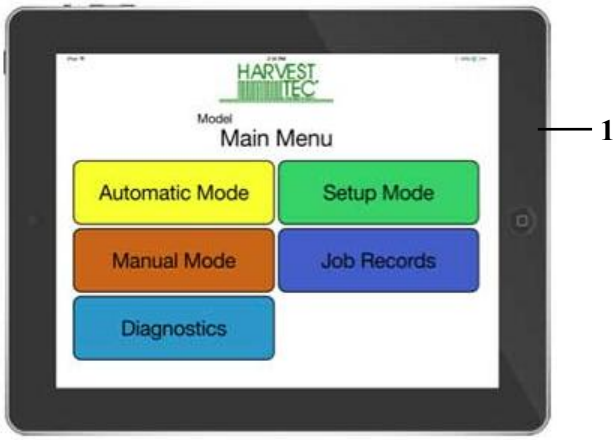

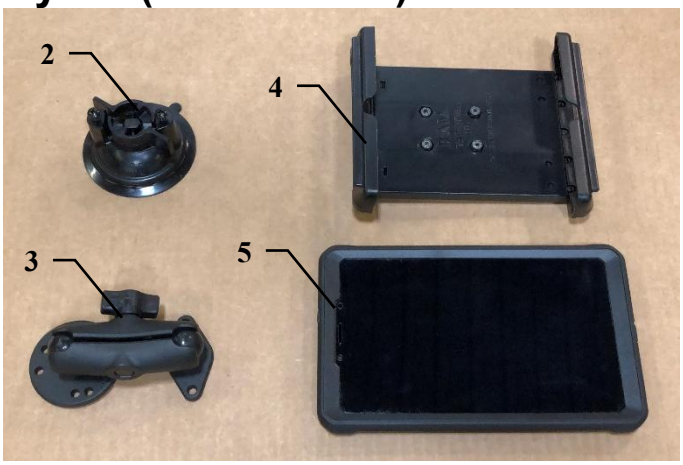

Ref	Description	Part #	Qty
1	iPad Mini 6	006-6670IP	1
2	Suction Cup Mount	001-2012SCM	1
3	Ram Mount	001-2012H	1
4	Spring Load Cradle	001-2012SLC	1
5	iPad Mini 6 Case	001-2012C6	1
NP	Power/Comm. Cable	006-6672USBX	1

Complete iPad Mini Display Kit **030-6670DK**

iPad mini is a trademark of Apple Inc., registered in the U.S. and other countries

Optional ISO Display Adapter Harness (006-7670A or 006-7670F)

For use with a dedicated ISO display

The 700 Series Applicator has the option to tie into compatible dedicated ISO monitors by utilizing the diagnostic port. When connected, the Harvest Tec System will populate as its own object pool within the ISO display. When this object pool is selected, the ISO monitor will then function as a dedicated monitor for the Harvest Tec System.

The Harvest Tec System will function as a stand-alone system when using this adapter.
System will not integrate with the baler ISO system software when using this adapter.

Any tablet connected to the ICM module must be disconnected from the ICM before the Harvest Tec Object Pool screen will activate within the ISO display.
To connect Adapter Harness (006-7670A or 006-7670F), unplug the 4-pin Key Power Plug (006-765CPH) connection from the Tractor Harness (006-765IC) and replace with the plug from the Adapter Harness. Connect the round plug end of the Adapter Harness to the Tractor ISO Display Diagnostic port.

Scan the QR code to view a short video of the
Adapter Harness for ISO Display:

For additional product and service information:
See our YouTube Channel https://www.youtube.com/@harvesttec

ISO Diagnostic Port Adapter (006-7670A)

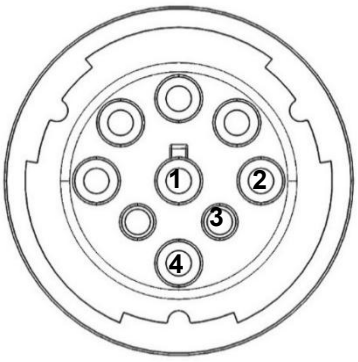

006-7670A connecting plug and pin out

Pin 1	Black	Ground
Pin 2	Yellow	CAN High
Pin 3	Green	CAN Low
Pin 4	Red	12V+ Key Power

ISO Diagnostic Port Adapter (006-7670F)

For Newer Fendt and MF Tractors with plug location in the cab ceiling

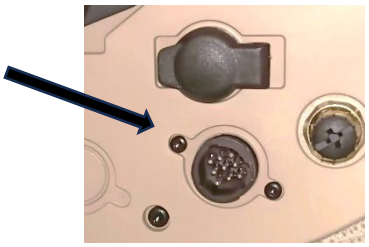

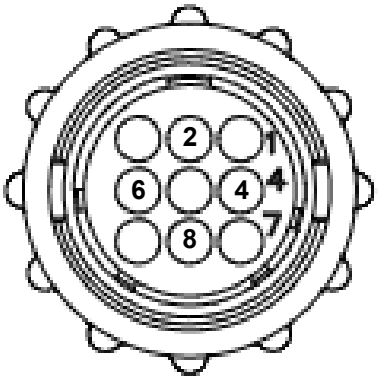

006-7670F connecting plug and pin out

Pin 8	Black	Ground
Pin 4	Yellow	CAN High
Pin 2	Green	CAN Low
Pin 6	Red	12V+ Key Power

Wiring Diagram – 700 Series

1. Connect the power harness (006-765IC) to the tractor battery (12 volt) using the red wire with fuse to the positive side and the black wire to the negative.
   A. **The power harness must be connected to the battery!**
      CONTACT HARVEST TEC BEFORE MODIFICATIONS.
      The unit will draw more amps than convenience outlets can handle. Any modifications of the power harness will void systems warranty
   B. **This unit will not function on positive ground tractors.**
   C. **If the unit loses power while operating it will not keep track of accumulated pounds of product used.**
2. The power harness on the tractor (006-765IC) will run from the tractor battery to the hitch. The power harness on the baler (006-765B2) will connect to the tractor power harness (006-765IC) at the hitch.
3. Connect the keyed power wire (006-765CPH) to a keyed power source on the tractor.
   The keyed power wire must connect to a keyed source or the unit will not power up correctly.
4. Attached the ISO Communication Module (006-6673) to the tractor power harness (006-765IC).
5. Attach the End of Bale (EOB) connection on baler harness (006-765B2) to the EOB Sensor (006-7401).
6. Attach the Solenoids (SOL 1 & 2) connections on the baler harness (006-765B2) and to the solenoids (002-2203F).
7. Attach the Flowmeter (006-4724A) to the Pump Module connection on pump plate assembly.
8. Attach the rubber molded connector on pump plate to the Pump (007-4120DE).
9. Attach star wheel (030-442U/UE) connection to the pump module
10. Connect either 006-700R terminator OR 006-765VAK integration harness (specific Krone balers only)

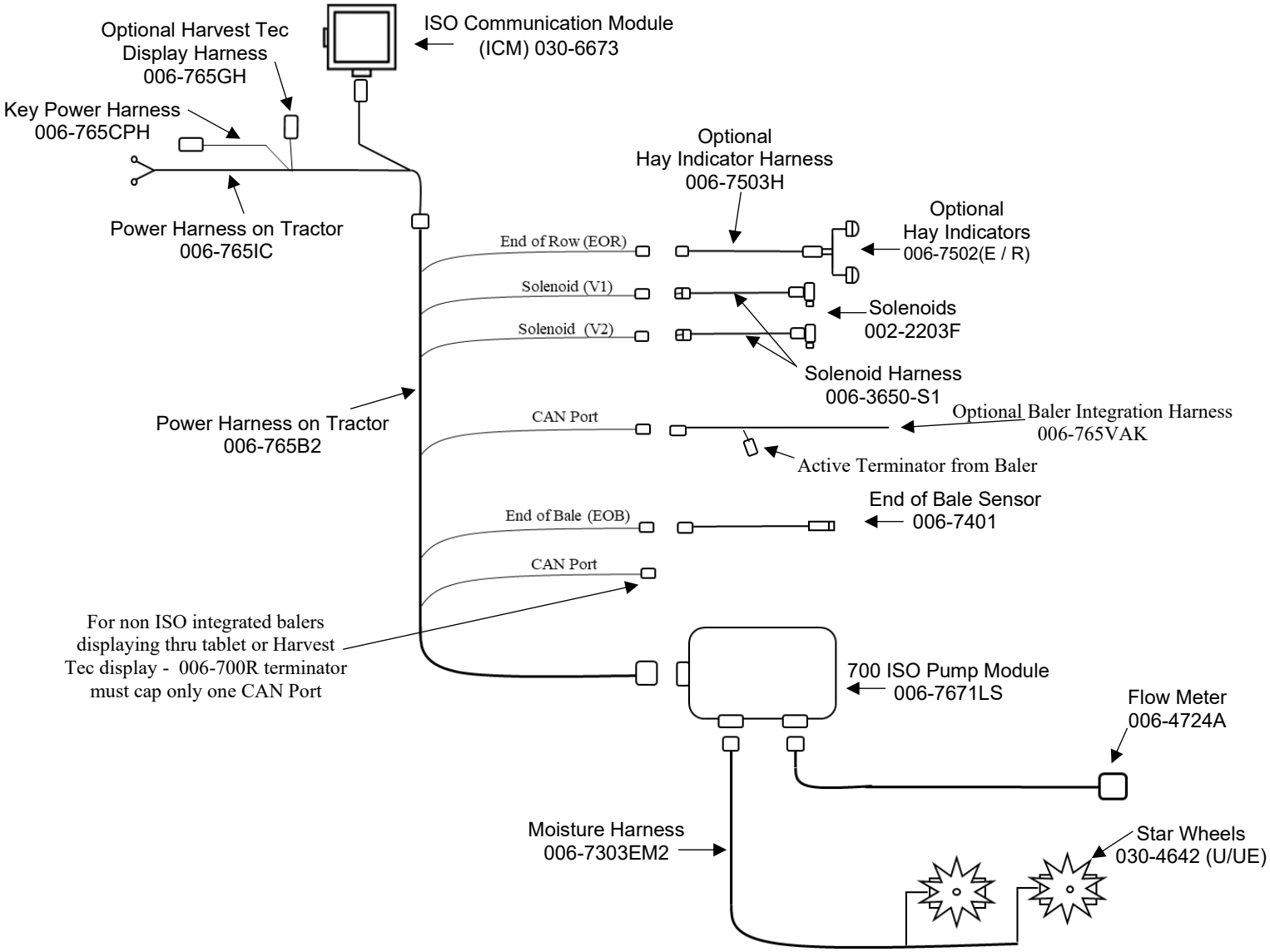

Pin Outs

Integrated Control Module (ICM) on Tractor Harness 006-765IC

(Deutsch Plug Number: DTM06-12SA)

Pin 1	Red	+12V from ECU
Pin 2	Purple	Signal Wire
Pin 3	Red/White	+12V CAN X
Pin 4	Black/White	Ground CAN X
Pin 5	Orange	CAN X Hi
Pin 6	Blue	CAN X Lo
Pin 7	Green	ISO CAN Lo
Pin 8	Yellow	ISO CAN Hi
Pin 9	White	GPS Expansion 1
Pin 10	Gray	GPS Expansion 2
Pin 11	Brown	GPS Expansion 3
Pin 12	Black	Ground from ECU

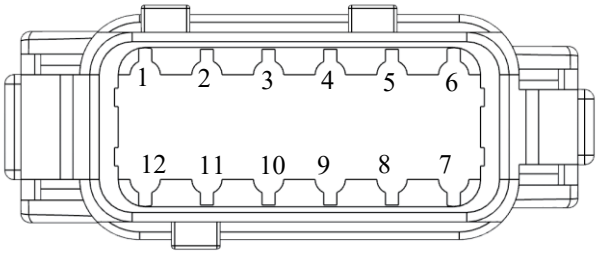

ISOBUS Plug on Tractor Harness 006-765IC

(Deutsch Plug Number: DT04-4P)

Pin 1	Red	+12V from ECU
Pin 2	Yellow	ISO CAN Hi
Pin 3	Green	ISO CAN Lo
Pin 4	Black	Ground from ECU

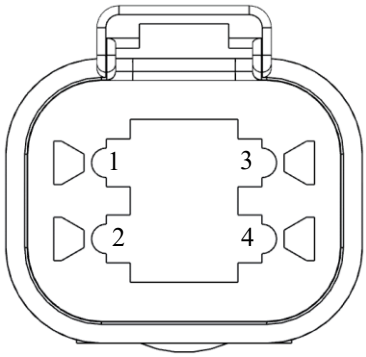

Power / Communication Tractor Harness 006-765IC at Baler Hitch

(Deutsch Plug Number: HDP24-24-18PN)

Pin 1	Not Used	----
Pin 2	Yellow	ISO CAN Hi
Pin 3	Green	ISO CAN Lo
Pin 4	Red	+12V Power to ECU
Pin 5	Black	Ground to ECU
Pin 6	Red	+12V From Battery
Pin 7	Not Used	----
Pin 8	Black	Ground From Battery
Pin 9	Not Used	----
Pin 10	Purple	Signal Wire
Pin 11	Red/White	+12V CAN X
Pin 12	Black/White	Ground CAN X
Pin 13	Orange	CAN X Hi
Pin 14	Blue	CAN X Lo
Pin 15	White	GPS Expansion 1
Pin 16	Gray	GPS Expansion 2
Pin 17	Brown	GPS Expainsion 3
Pin 18	Not Used	----

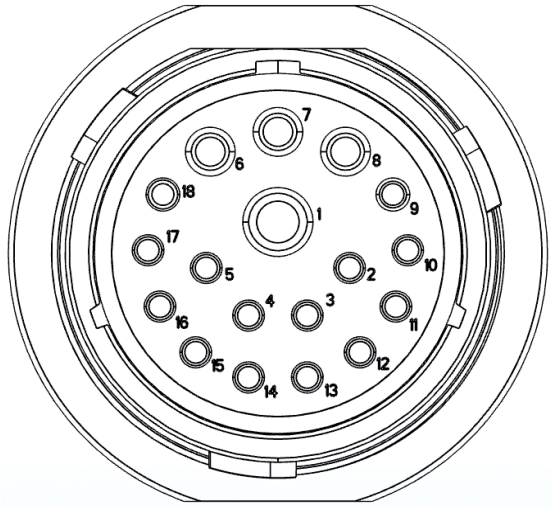

Pin Outs (continued)

Power / Communication Baler Harness 006-765B2 at Baler Hitch IPM
(Deutsch Plug Number: HDP26-24-18SN)

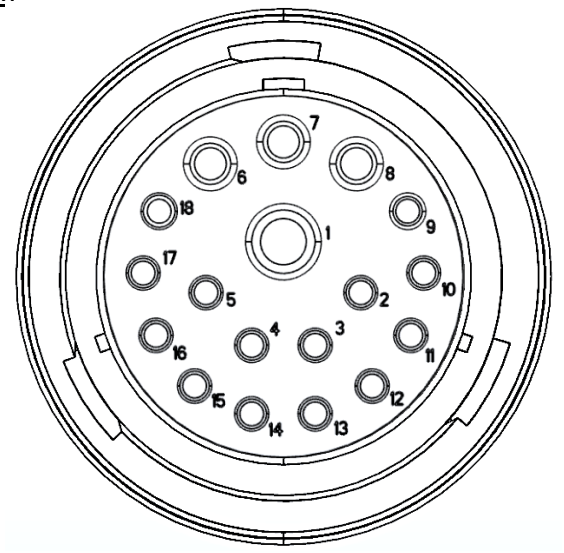

Pin 1	Not Used	----
Pin 2	Yellow	ISO CAN Hi
Pin 3	Green	ISO CAN Lo
Pin 4	Red	+12V Power to ECU
Pin 5	Black	Ground to ECU
Pin 6	Red	+12V From Battery
Pin 7	Not Used	----
Pin 8	Black	Ground From Battery
Pin 9	Not Used	----
Pin 10	Not Used	----
Pin 11	Not Used	----
Pin 12	Not Used	----
Pin 13	Not Used	----
Pin 14	Not Used	----
Pin 15	Not Used	----
Pin 16	Not Used	----
Pin 17	Not Used	----
Pin 18	Not Used	----

Power / Communication Baler Harness 006-765B2 at IPM Module
(Deutsch Plug Number: HDP24-24-18SN)

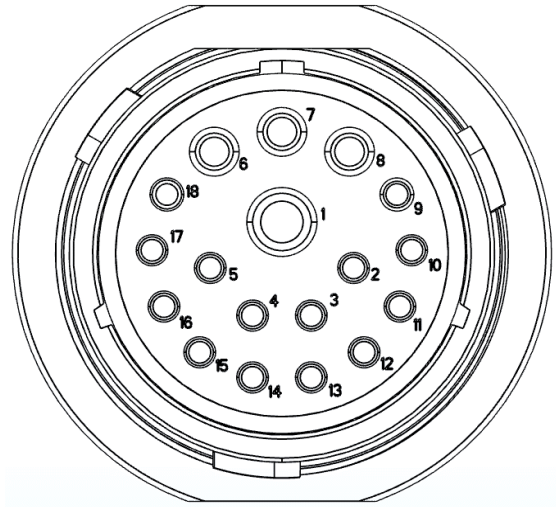

Pin 1	Not Used	----
Pin 2	Yellow	ISO CAN Hi
Pin 3	Green	ISO CAN Lo
Pin 4	Red	+12V Power to ECU
Pin 5	Black	Ground to ECU
Pin 6	Red	+12V From Battery
Pin 7	Not Used	----
Pin 8	Black	Ground From Battery
Pin 9	Not Used	----
Pin 10	Orange/White	+12V Power to EOR
Pin 11	Orange/Black	Ground to EOR
Pin 12	Purple/Green	EOR Signal
Pin 13	Blue/White	EOB Signal
Pin 14	Gray/Red	+12V Power to Solenoid 1
Pin 15	White/Black	Ground to Solenoid 1
Pin 16	Orange/Red	+12V Power to Solenoid 2
Pin 17	White/Black	Ground to Solenoid 2
Pin 18	Not Used	----

*IPM Module Whip Plug- Pin # 5 Not Used

Solenoid 1 Plug on Baler Harness 006-765B2
(Deutsch Plug Number: APTIV 12052641)

Pin B	Gray/Red	+12V to Solenoid 1
Pin A	White/Black	Ground to Solenoid 1

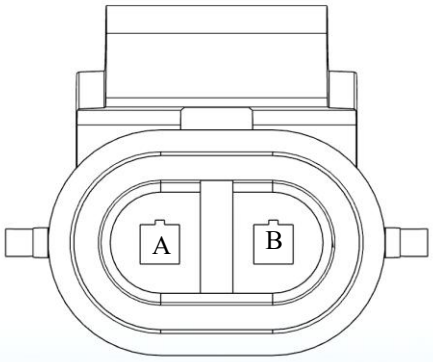

Solenoid 2 Plug on Baler Harness 006-765B2
(Deutsch Plug Number: APTIV 12052641)

Pin B	Orange/Red	+12V to Solenoid 2
Pin A	White/Black	Ground to Solenoid 2

Pin Outs (continued)

CAN / IDM on Baler Harness 006-765B2
(Deutsch Plug Number: DT06-4S)

Pin 1	Red	+12V to Solenoid 2
Pin 2	Yellow	ISO CAN Hi
Pin 3	Green	ISO CAN Lo
Pin 4	Black	Ground to Solenoid 2

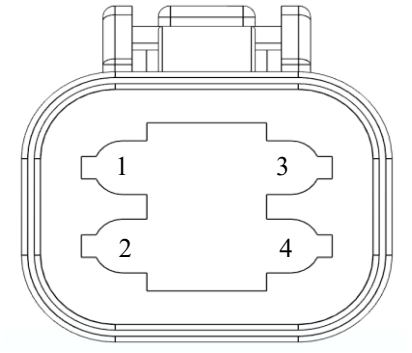

End of Bale Sensor Plug on Baler Harness 006-765B2
(Deutsch Plug Number: DT06-3S)

Pin 1	Orange/White	+12V to End of Bale Sensors
Pin 2	Orange/Black	Ground to End of Bale Sensors
Pin 3	Blue/White	Signal

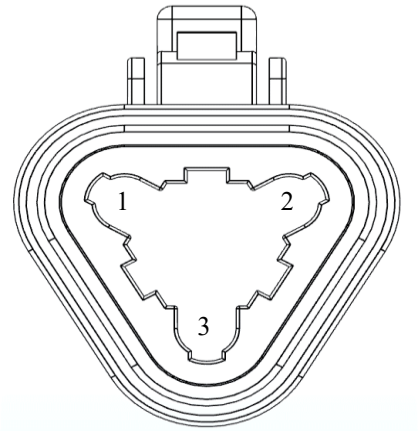

End of Row Sensors Plug on Baler Harness 006-765B2
(Deutsch Plug Number: DT06-3S)

Pin 1	Orange/White	+12V to End of Bale Sensors
Pin 2	Orange/Black	Ground to End of Bale Sensors
Pin 3	Blue/White	Signal

Integration Harness Plug on Baler Harness 006-765B2
(Plug: APTIV 12052848)

Pin A	Not Used	----
Pin B	Red	+12V Power
Pin C	Not Used	----
Pin D	Gray	Ground
Pin E	Orange	CAN Hi
Pin F	Blue	CAN Lo

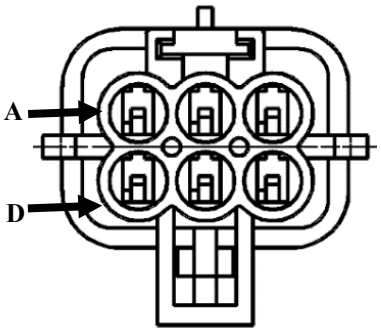

Pump Connection on 700 Controller Harness
(16 AWG Two-Wire Plug)

Pin 1	Red	Power to Pump
Pin 2	Black	Ground to Pump

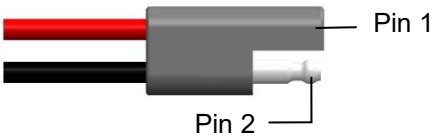

Harvest Tec LLC. Warranty and Liability Agreement

Harvest Tec, LLC. will repair or replace components that are found to be defective within 12 months from the date of manufacture. Under no circumstances does this warranty cover any components which in the opinion of Harvest Tec, LLC. have been subjected to negligent use, misuse, alteration, accident, or if repairs have been made with parts other than those manufactured and obtainable from Harvest Tec, LLC.

Our obligation under this warranty is limited to repairing or replacing free of charge to the original purchaser any part that in our judgment shows evidence of defective or improper workmanship, provided the part is returned to Harvest Tec, LLC. within 30 days of the failure. If it is determined that a non-Harvest Tec manufactured product has been used inside the Harvest Tec applicator system where the failure occurred, then Harvest Tec reserves the right to deny the warranty request at their discretion. Parts must be returned through the selling dealer and distributor, transportation charges prepaid.

This warranty shall not be interpreted to render Harvest Tec, LLC. liable for injury or damages of any kind, direct, consequential, or contingent, to persons or property. Furthermore, this warranty does not extend to loss of crop, losses caused by delays or any expense prospective profits or for any other reason. Harvest Tec, LLC. shall not be liable for any recovery greater in amount than the cost or repair of defects in workmanship.

There are no warranties, either expressed or implied, of merchantability or fitness for particular purpose intended or fitness for any other reason. This warranty cannot guarantee that existing conditions beyond the control of Harvest Tec, LLC. will not affect our ability to obtain materials or manufacture necessary replacement parts.

Harvest Tec, LLC. reserves the right to make design changes, improve design, or change specifications, at any time without any contingent obligation to purchasers of machines and parts previously sold.

Revised 1/24

HARVEST TEC, LLC.
P.O. BOX 63
2821 HARVEY STREET
HUDSON, WI 54016 USA
PHONE: 715-386-9100
FAX: 715-381-1792
Email: info@harvesttec.com