Installation Manual

Model 795BBHD

115 Gallon Preservative Applicator
New Holland & Case IH BB High Density Baler

HarvestTec®

EST. 1976

795BBHD-26-INST
9/26

Table of Contents

	Page
Introduction	**3**
Tank and Tank Saddle Kit	**4-6**
Optional Light Camera Extension Bracket Kit	6
Pump Plate and Handrail Mounting	6
Pump Plate Breakdown	**7**
Drain / Fill Kit	**8**
Parts Bags and Hoses Breakdown	9
Spray Shield	**10-11**
Wind Guard Kit	11-12
Solenoids and Hose Routing	**13-14**
Solenoid Breakdown	14
Main Wire Harness and Connections	**15-16**
Main Controls and Main Harnesses	16
Star Wheel Moisture Sensors	**17-18**
Moisture Kit Breakdown	18
End of Bale Sensor (EOB)	**19**
Tractor Setup	**20**
Display Options	**21-28**
Optional Harvest Tec Display Kit	22
Optional Android Tablet Display Kit	23
Optional iPad Display Kit	23
Optional ISO Display Adapter	24
Optional Baler VT Integration	25
ISO Baler Integration Setup	26-28
Wiring Diagram	**29**
Pin Outs	**30-32**
Warranty Statement	**33**

Introduction

Thank you for purchasing the 795BBHD Hay Preservative Applicator System. This applicator system has been designed to plug directly into the baler's ISOBUS and display on the New Holland Intelliview 3 or Intelliview 4, Case Pro 300 or Pro 700. System also has the option of operating through an Apple iPad or Android Tablet (not included) using the Harvest Tec Precision Baling App available from the Apple App or Google Play stores for free download for compatible devices. The Preservative Applicator System offers these advantages:

1. Operation coordinated with baler operation
2. Less cab clutter providing better visibility
3. Ease of use with all information on one screen
4. Records kept together
5. The system is ready for future updates

This Hay Preservative Applicator System is designed to apply Harvest Tec Baler's Choice buffered propionic acid to the forage crop as it is baled. **Use of alternative products may cause system complications and voids Harvest Tec manufacturer's warranty.** Complications may include inaccurate readings from the flow meter and damage to system components. Applicator will adjust the rate of application based on moisture and tonnage of the crop being harvested. Read this manual carefully to ensure correct steps are followed to attach the applicator to the baler. Failure to do this can result in personal injury or equipment malfunction. Contact your local authorized dealership or Harvest Tec for additional assistance or replacement part needs.

Right and Left sides are determined by facing in the direction of forward travel.

System Requirements

CNH Baler Monitor must have version 4.2.0 or higher

Made for Harvest Tec Display, Baler Integration, or Tablet
For best performance ensure all displays are running the latest operating system.

Tools Needed:

- Standard wrench set
- Crescent wrench
- Standard socket set
- Hose cutter
- Electric drill and bits
- Standard screwdriver
- Hammer
- Center punch
- Side cutter
- Standard nut driver set
- Metal cutting tools

Tank and Saddle Kit
(030-0491BBHD-TK) for CNH BB HD Balers

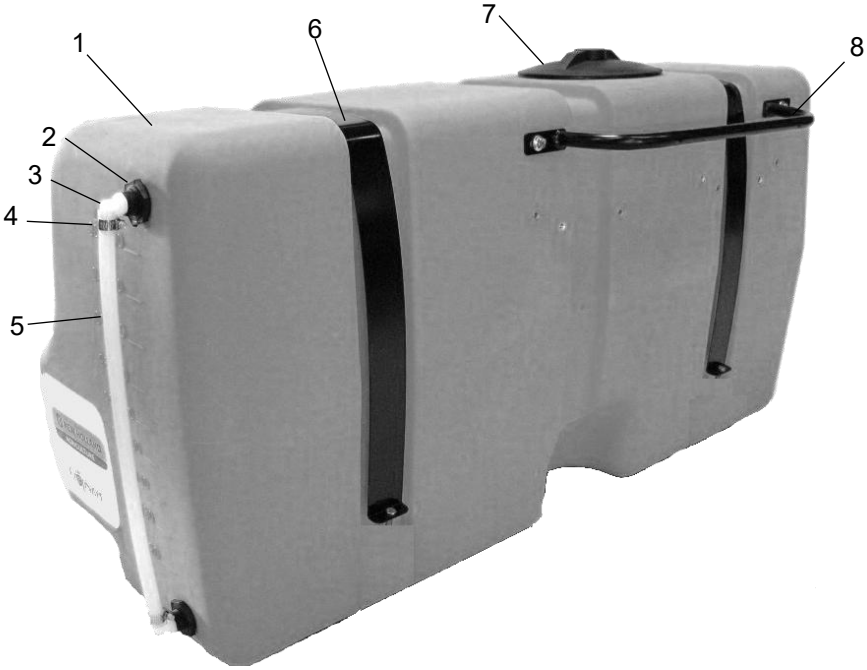

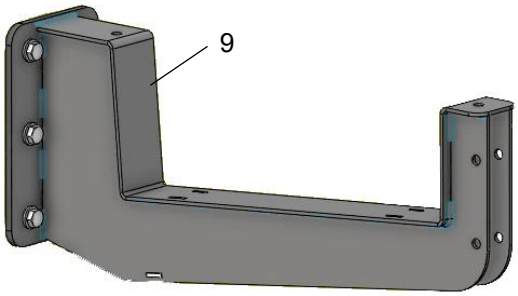

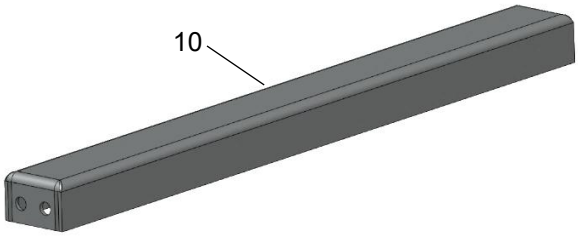

Ref	Description	Part Number	Qty
1	Tank	005-9218	1
2	1/2" tank fitting	005-9104	2
3	Elbow	003-EL1212	2
4	Hose Clamp	003-9003	2
5	1/2" Hose	002-9001	2
6	Tank Straps	001-6707P	2
7	Tank Lid	005-9022H	1
8	Handrail	001-6707HR	1
9	Tank Leg Mount	001-6707MHD1	2
10	Cross Beam	001-6707MHD2	1

Ref	Description	Part Number	Qty
NP	3/4" Elbow	003-EL3434	1
NP	3/4” x1/2” Elbow	003-EL3412	1
NP	3/4” Tank Fitting	005-9100	2
11	Cam/Light Bracket	001-67007PM	1
12	Camera/Light Mount	001-6707PMZ	1
13	Light Extension Cable	006-7303LTX	1

Camera/Light Ext. Kit (ref 11-13) **030-6707BLK**

Complete Replacement Tank 030-9218
(includes all tank fittings and lid)

Complete Tank Saddle Kit Assembly (all parts) 030-0491BBHD-TK

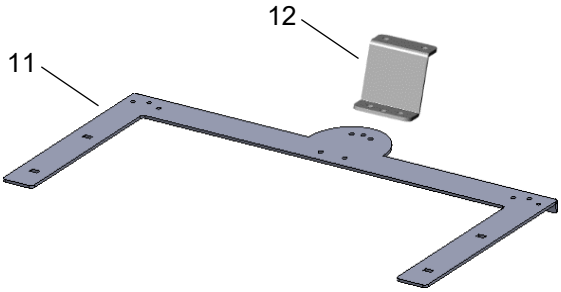

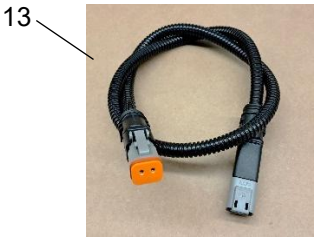

Tank and Tank Saddle Kit - Installation

1. Install the two saddle legs (001-6707MHD1) on to the rear of the bale support bracket. Locate the pre-drilled holes and hardware from parts bag 20 to mount the legs as shown (right). Do not fully tighten until cross beam is installed in next step.

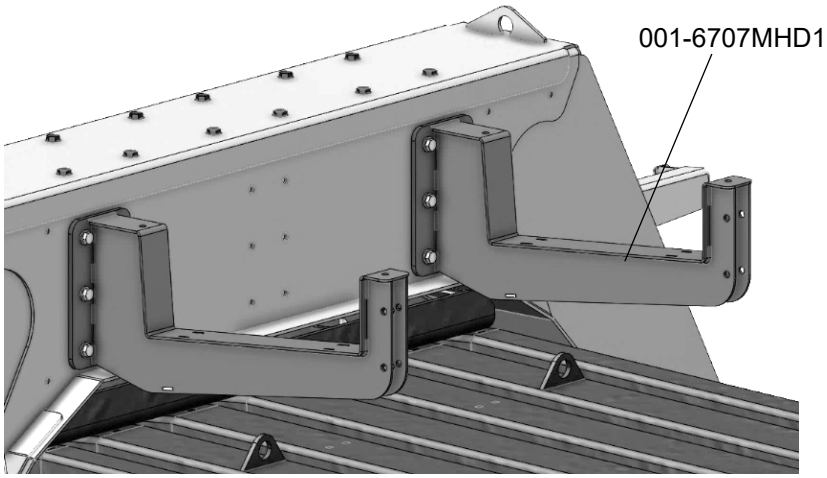

2. Locate the cross beam (001-6707HD2) and mount between the two tank legs (001-6707HD1) using the pre-drilled holes on each leg. Using the hardware in parts bag 20 secure the beam. The tank legs can now be fully tightened.

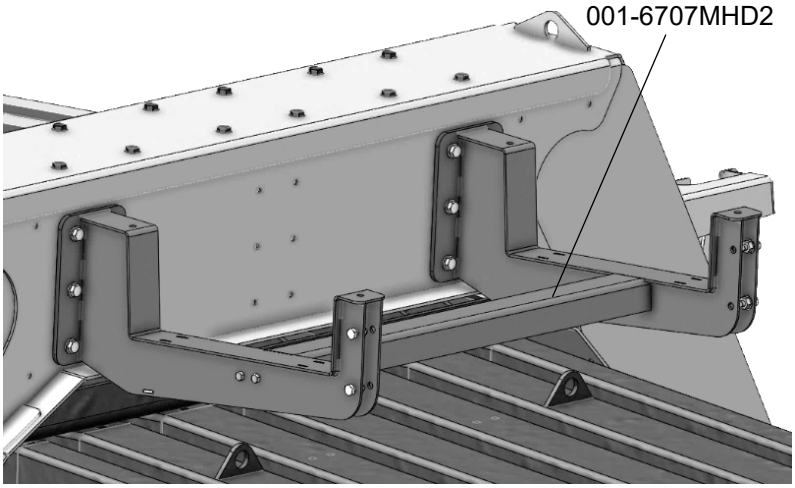

3. Position the tank assembly (030-9218) and tank straps (001-6707P). *Do not tighten tank straps prior to installing the Rear Light Camera Bracket in the next step.

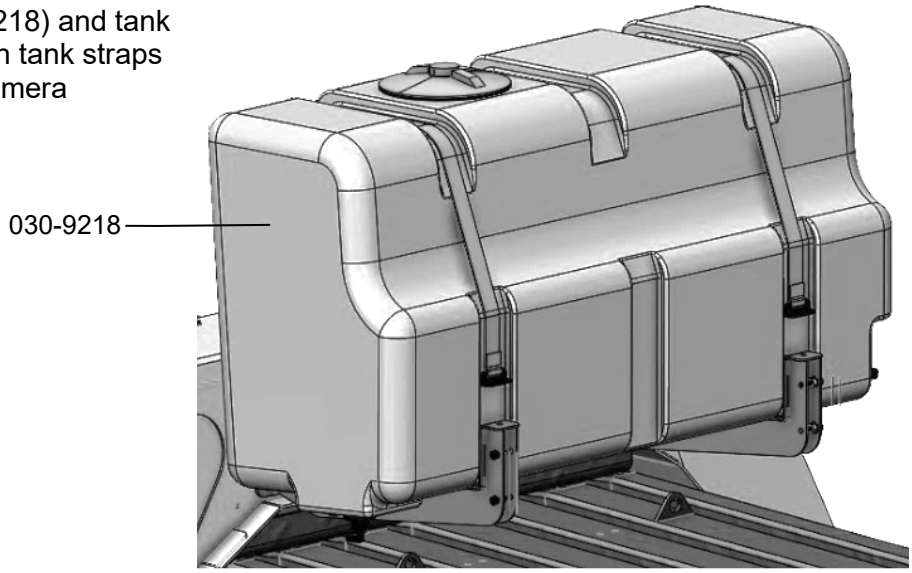

Installation of Tank (continued)

4. Rear Light Camera Brackets Installation
   (Camera Light Extension Kit 030-6707BLK)

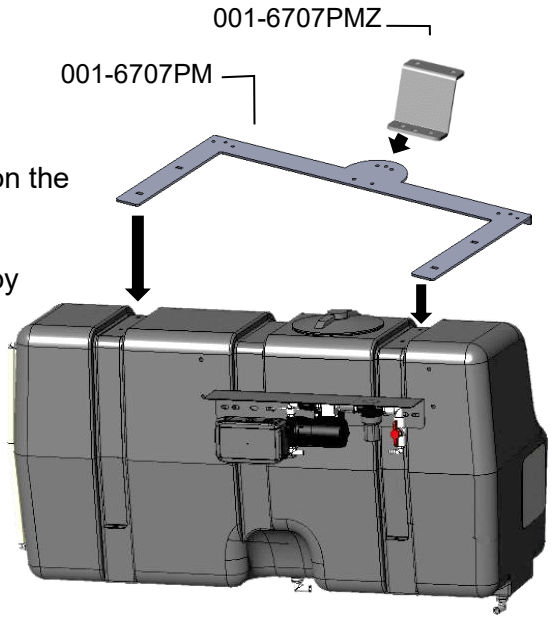

There is now an optional rear light extension bracket available for the NH330+ & NH340+ and LB334XL & 434XL baler models. To reposition the lights, camera, and beacon light to the back of the preservative tank.

Install the camera/light bracket (001-6707PM) as shown on the right by lining up two holes in the arms of the bracket with the holes on the tank straps. Using the supplied elevator bolts install the bolt with the head on the tank side with threads pointing upward.

Install the camera mounting brackets (001-6707PMZ) to the camera light bracket as shown on right. Move the lights and camera as needed using the light extension harness (006-7303LTX).

Note:
The straps will need to be loosened to allow room for placement of the bolts. Retighten after bolts are installed.

Pump Plate and Hand Rail – Installation
Pump Mounting Kit (PMP-7636SMT)

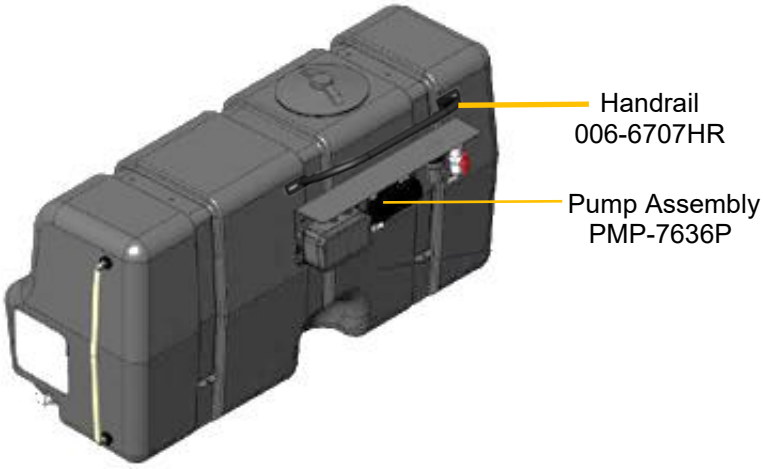

1. Attach handrail (001-6707HR) to tank with two 3/8” x 3/4” flange bolts.
2. Locate pump control (006-7671LS) and attached to pump plate with #10 x 3/4" flat head machine screws. Choose fittings and install them into valve and pump discharge.
3. Attach pump plate holder (001-4648XB) to tank and just below handrail with two 3/8” x 3/4" flange bolts.
4. Attach pump plate to the pump holder with 3/8” hardware.
5. Connect 1/2" hose between elbow fitting on bottom of tank and valve on pump plate. Secure with supplied hose clamps.

The Pump Controller and pump heads must be pointing down. Failure to mount the pump plate assembly in this specified direction will void all warranty of the Pump Controller and pumps

Parts Breakdown for Pump Assembly

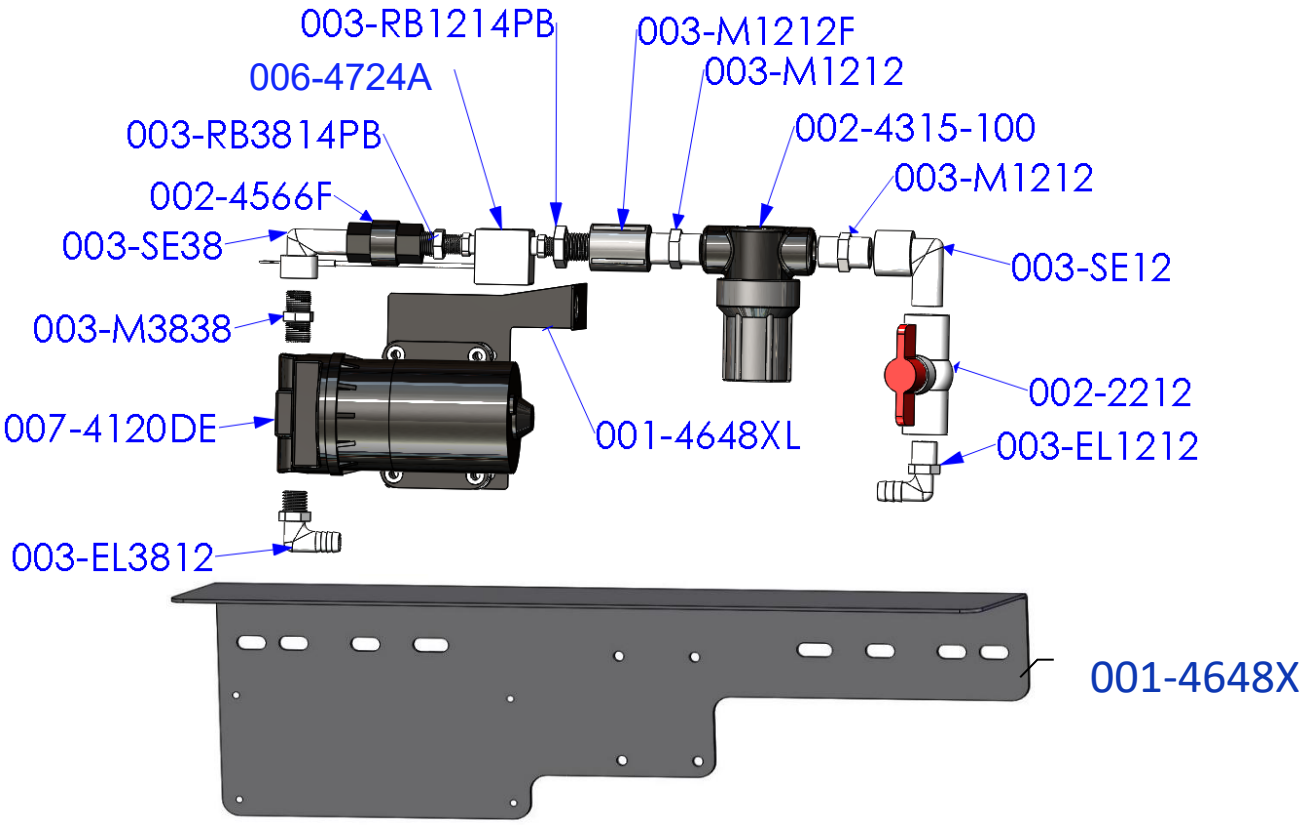

Part#	Description	Qty	Part#	Description	Qty
003-EL3812	3/8”MPT X 1/2"HB Elbow	1	003-M1212	1/2" Union	2
007-4120DE	700/300 Series Pump	1	002-4315-100	1/2" Line Strainer-100 Mesh	1
003-M3838	3/8” x 3/8” Union	1	003-SE12	1/2" Street Elbow	1
003-SE38	3/8” Street Elbow	1	002-2212	1/2" Ball Valve	1
002-4566F	3/8” Check Valve	1	003-EL1212	1/2"MPT x 1/2"HB	1
003-RB3814PB	RB 3/8” x 1/4” Reducer	1	001-4648XL	300 Pump Support	1
006-4724A	Flow Meter-Deutsch Plug	1	001-4648X	Pump Plate Mount	1
003-RB1214PB	RB 1/2" x 1/4" Reducer	1	003-A1212*	1/2" MPTx1/2”HB(Not Pictured)	1
003-M1212F	1/2" Coupler	1	003-A3812*	3/8" MPTx1/2”HB(Not Pictured)	1

*Note: Due to alternative baler designs, elbow 003-EL3812 can be replaced by straight fitting 003-A3812. Elbow 003-EL1212 can also be replaced by straight fitting 003-A1212. Both straight fittings are included.

Filter Bowl Replacement Parts

002-4315F	Filter Bowl
002-4315D	Filter Bowl Gasket
002-4315A	Replacement Screen-100 Mesh
002-4315B	Replacement Screen- 80 Mesh

Pump Plate Mounting – PMP-7636SMT

001-4648XB	Pump Plate Mount Adapter

Completed Assembly – PMP-7636P

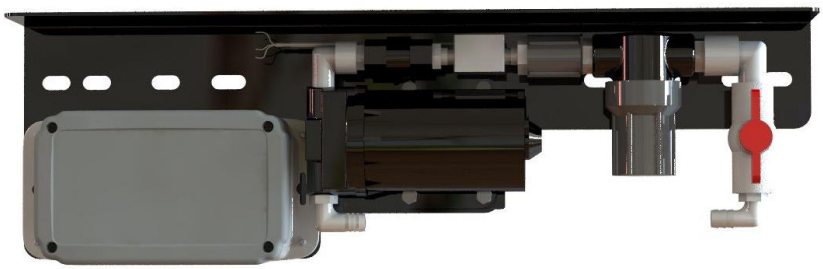

Drain & Fill Line

1. Thread 3/4” elbow fitting into end of tank.
2. Run hose from the elbow down the frame to the bottom of the baler.
3. Drill 1/4” (7mm) holes to accept the valve holder bracket and use 5/16” x 1” self-tapping screws.
4. Connect valve assembly to other end of hose. Place hose clamps on both ends.
5. Secure hose to frame using cable locks.

Parts Bags Breakdowns

PBA-1

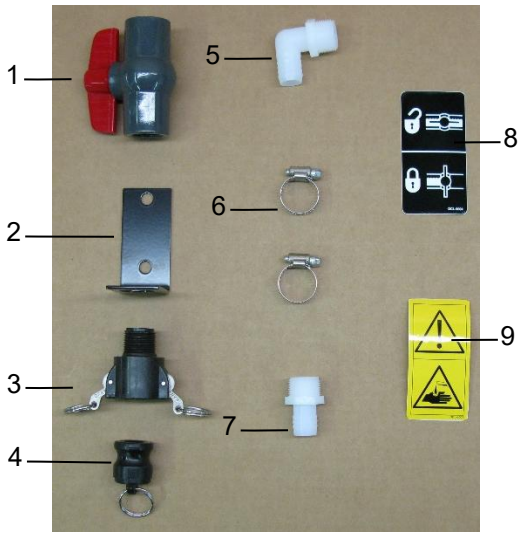

Ref	Description	Part #	Qty
1	3/4" Ball Valve	002-2200	1
2	Valve Holder	001-6702H	1
3	Female Coupler	002-2204A	1
4	Male Shut-Off Plug	002-2205G	1
5	3/4” x 3/4" Elbow	003-EL3434	1
6	#10 Hose Clamp	003-9004	2
7	3/4" x 3/4" Straight Fitting	003-A3434	1

Complete Drain Fill Kit 030-0493DFK
(Includes 3/4" tubing below)

PBP-16

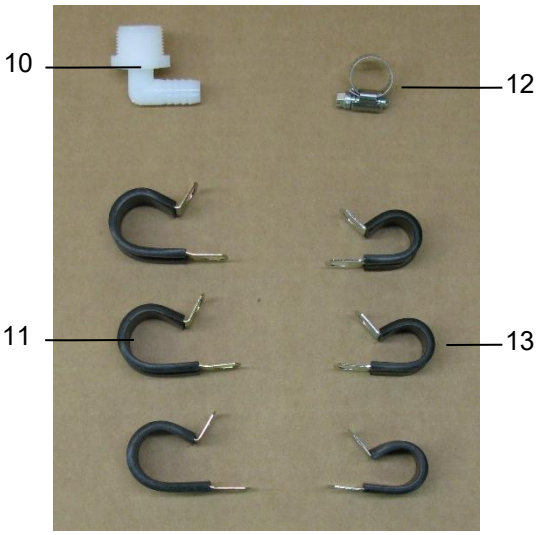

Ref	Description	Part #	Qty
8	Valve Decal	DCL-8004	1
9	Hazard Decal	DCL-8001	1
10	3/4" x 1/2" Elbow	003-EL3412	1
11	3/4" Jiffy Clip	008-9010	3
12	#6 Hose Clamp	003-9003	1
13	Small Jiffy Clip	008-9009	3

Hoses

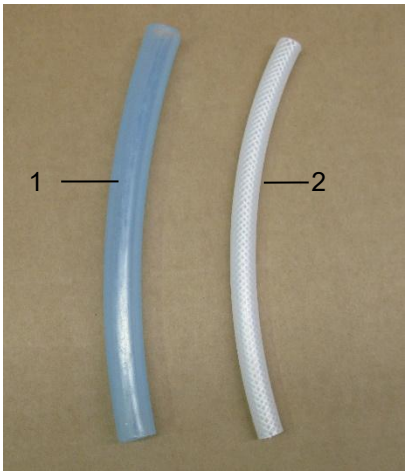

Ref	Description	Part#	Qty
1	1/2” Hose (Tank to Solenoid)	002-9001	30’
2	1/4" Hose (Solenoid to Tips)	002-9016	5’
NP	3/4" Hose (Drain/Fill Line)	002-9002	10’

<u>Spray Shield</u> - Install Kit 4636C

For HD Roto-Cut Balers:

1. Locate the baler cross member directly above the rotor (below point A).
2. Locate the four pre-drilled holes on the cross member (point B).
3. Install spray shield holder (001-4435NC) to baler using three 5/16” x 1” bolts, lock washers, hex nuts.
4. Install the spray shield (001-4435NSX) to the the shield holder (001-4435NC) and secure with lynch pins.

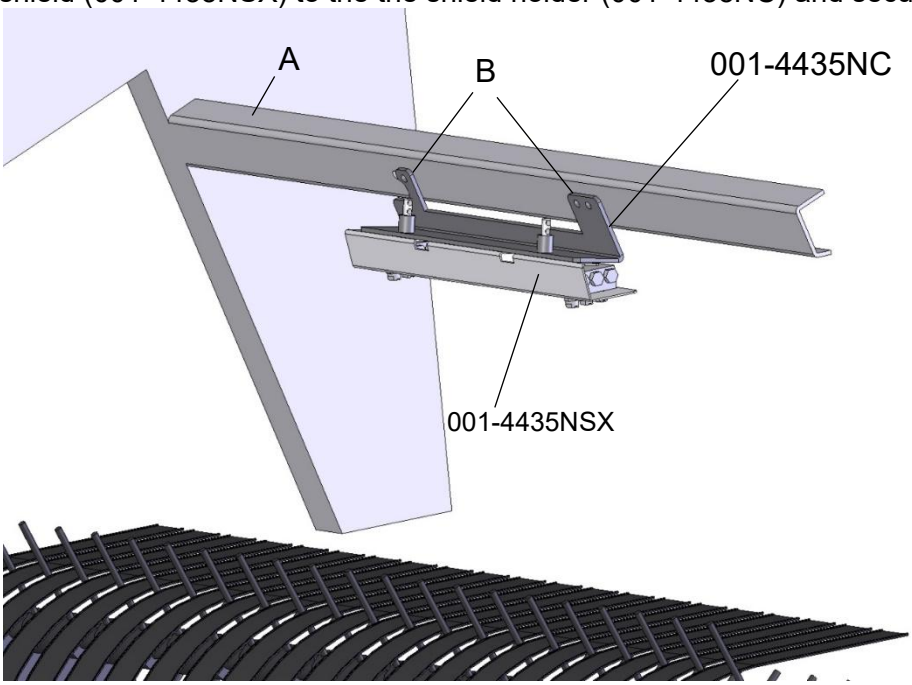

For HD Packer Balers:

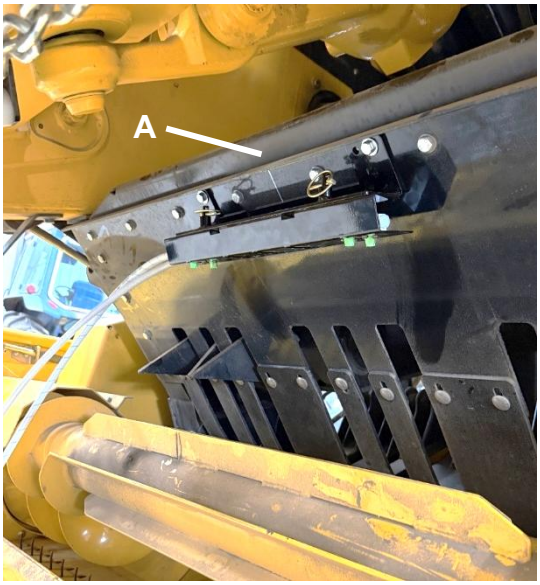

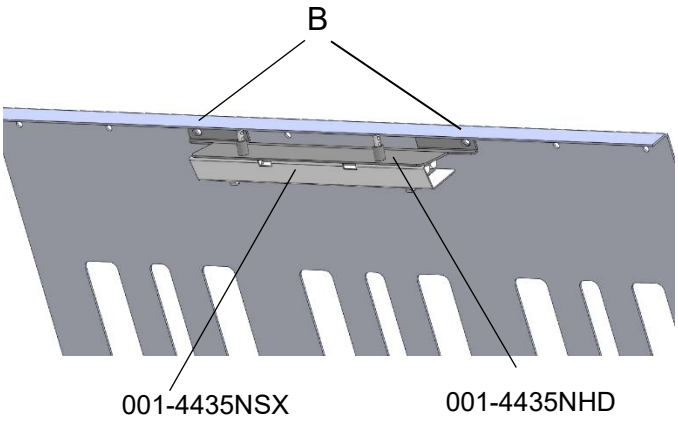

1. Locate the center of the packer shield (below point A).
2. Center the Shiled Holder Bracket (001-4435NHD) on the very top of the packer shield; mark and drill holes (point B). One hole on each side of holder is sufficient.
3. Install spray shield holder to baler using supplied 5/16” x 1” bolts, lock washers, hex nuts.
4. Set proper spray angle by clamping onto spray shiled holder with a wrench or pliers and bending downward, so spray will be applied between the packer shiled and roller.
5. Install the spray shield (001-4435NSX) to the the shield holder and secure with supplied lynch pins.
6. Raise and lower pickup to ensure roller does not contact the spray shield or spray tips.

Installation Kit 4636C

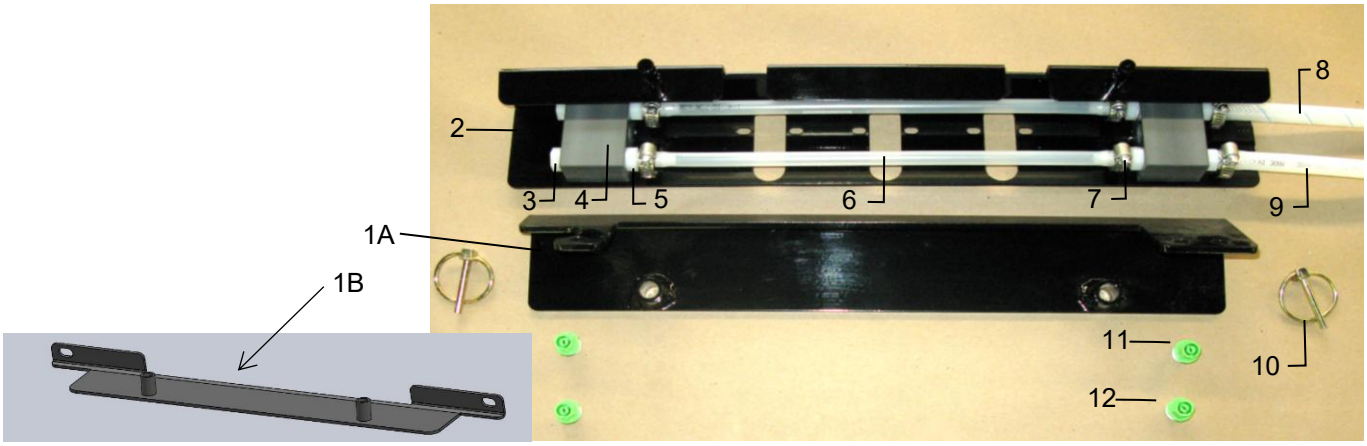

Ref	Description	Part #	Qty	Ref	Description	Part #	Qty
1A	Shield Holder	001-4435NC	1	8	¼" Braided Hose- Blue	002-9016B	4 ft
1B	Shield Holder	001-4435NHD	1	9	¼" Braided Hose	003-9016	4 ft
2	Spray Shield	001-4435NSX	1	10	Lynch Pin	008-4576	2
3	¼" Hex Plug	003-F14	2	11	Tip	004-T8008-PT	2
4	Manifold Blk	001-4435NSB	2	12	Tip	004-T8004-PT	2
5	¼" HB Straight Fit.	003-A1414F	8	NP	Female Quick Connect	004-1207H	2
6	¼" EVA Tubing	002-9006	2ft	NP	Rubber Washer	001-1207W	2
7	Mini Hose Clamp	003-9002	8		*Tip colors subject to change		

Spray Shield Only Assembly **030-4536C**
(does not include holder 1A or 1B)

Wind Guard Kit 030-6707WG4
(for 4ft Roto-Cutter balers only)

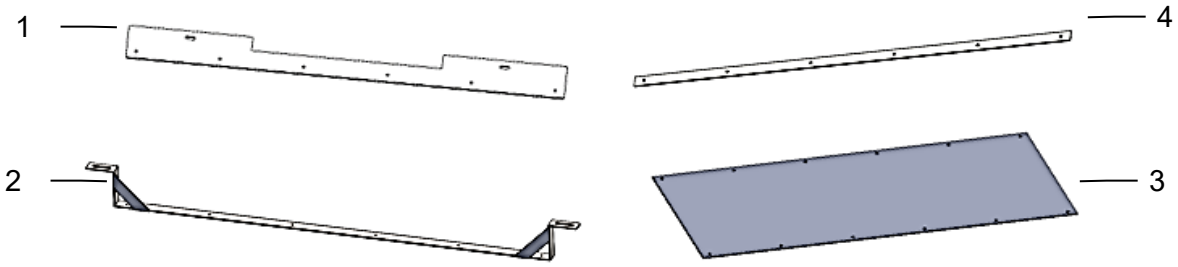

Ref	Description	Part Number	Qty
1	Wind Guard Top Brkt.	001-6707MA	1
2	Wind Guard Bottom Brkt.	001-6707MC	1
3	4' Wind Guard Flap	001-6707GM4	1
4	Backing Plate	001-6707MB	2

Complete Wind Guard Kit **030-6707WG4**

Wind Guard Kit (030-6707WG4)

Installation
The wind guard is not required to be installed on the 436 HD balers with Roto-Cut pickup.

3x4 Baler

Step 1: Locate the ledge near the spray shield (1) and with 001-6707MA in hand, mark out drill locations for the two slots of the 6707MA bracket. Bracket should be as centered about the spray shield. If you're confident with drill locations, drill the two holes and move to step 2. Also note the factory drilled holes on the tongue of the baler (2), locate part 001-6707MC and ensure holes align on both sides.

Step 2: Assemble the wind guard (030-6707WG4). Start by locating all the materials listed above. Using the 1''x 1/4'' bolts and washers place the guard material (001-6707GM4) on the top bracket. Guard material should now be held in place with only the bolts. Locate part (001-6707MB) and place over protruding bolts, secure with flat washers and nuts. Note: Ensure the rubber guard material is placed on the top side of the of the 6707MA bracket.

Step 3: Again, using the same hardware from step 2 fasten the guard material to the bottom bracket (001-6707MC) utilizing the remaining 001-6707MB backing bracket to clamp down the material.

Step 4: Bring assembled wind guard to the baler, it is recommended that you get another person to assist here. Start by securing the top bracket to the ledge where holes were previously drilled. Secure with 5/16 x 1'' hardware. Now locate the 5/16 x 1.5'' bolts. Use the bolts, flat washers, and nuts to secure the bottom bracket to the baler factory drilled holes. Refer to finished install side view shown on the right.

Note: If installed correctly, the wind guard should not make contact with the fly wheel or center feed roll when the pick-up head is fully lifted.

Solenoids and Hose Routing

A. Once Spray Shield is mounted, locate the Solenoid Kit SOL-3SP-LS. Pulsing Solenoids (002-2203F) come pre-installed on the Solenoid Mount Plate (001-4648DSH). Mount this assembly in an accessible location as close as possible (max distance 3ft) to the Spray Shield. This will ensure the most precise application of the preservative.

Solenoids
002-2203F

Solenoid Mount
001-4648DSH

Solenoid Harness
006-3650-S1

B. Once solenoids are mounted, streamline solenoid harness 006-3650-S1 along baler back to connection on main baler harness 006-765B2. Solenoid with white dot attaches to SOL 1 and Solenoid with blue dot attaches to SOL 2. Connect harnesses and ensure they are secure.

C. Route hoses along the path or similar inside of the baler, as shown in picture above. Keep hoses away from moving parts and hydraulic hoses. When all connections are made to the tank, solenoids, and spray shield secure with existing cable clamps or use cable ties.

D. Connect hoses from spray shield to solenoids. Note: Make sure solenoid with white dot attaches to spray shield with white dot. Follow same procedure for blue dots.

Tip Connections

Dot color	Tip	Hose color	Position on 765B2 wire
White Dot	8004 or 11004	White	Sol 1
Blue Dot	8008 or 11008	Blue tracer	Sol 2

700 Solenoid Package for Large Square Balers

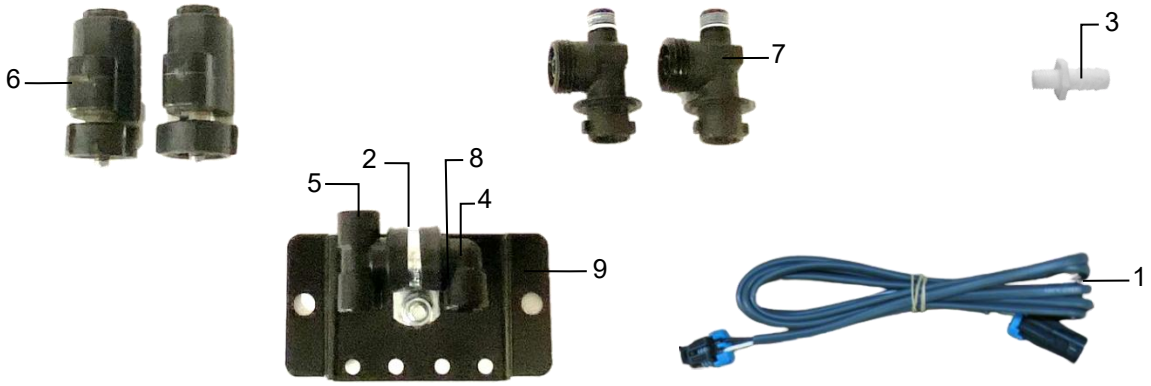

Ref	Description	Part #	Qty	Ref	Description	Part #	Qty
1	Solenoid Harness (5')	006-3650-S1	2	6	Solenoid	002-2203F	2
2	Hose Clamp #6	003-9003	1	7	Solenoid Valve Body	004-1207VF	2
3	1/4" x 1/2" Straight Fitting	003-A1412	1	8	1/4" Nipple	003-M14	1
4	1/4" Elbow	003-SE14F	1	9	Solenoid Holder	001-4648DSH	1
5	1/4" Tee Fitting	003-TT14SQ	1	NP	O-Ring Kit (Replacement)	002-2203FG	2
					Complete Assembly	SOL-3SP-LS	

Expanded View of Pulsing Solenoid (002-2203F)

Replacement Pulsing Solenoid O-Ring Kit available (002-2203FG)
(Includes EPDM O-Rings 6, 8, 9 shown below)

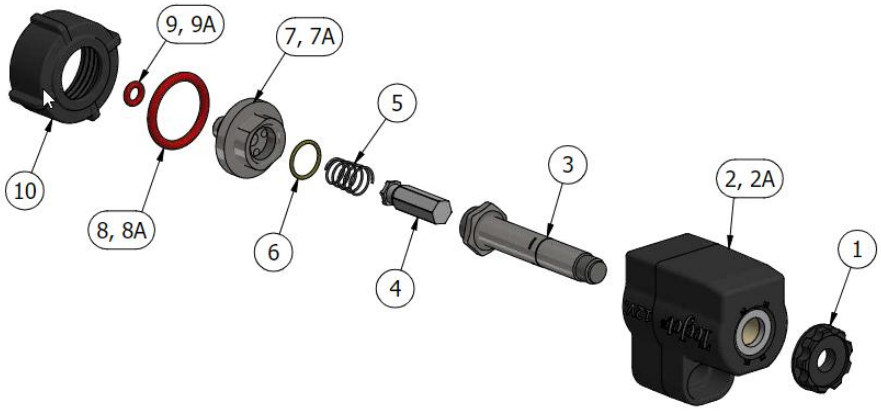

To clean solenoid valves:

The Center Section can be removed from Housing #2 by loosening #1 from #3. Once removed, use wrenches on components #3 and #7 and gently turn to loosen and separate. Soak parts #3-10 in warm soapy water, clean with a soft bristle brush, rinse with clean water to remove buildup before reassembly.

Main Wire Harness and Connections

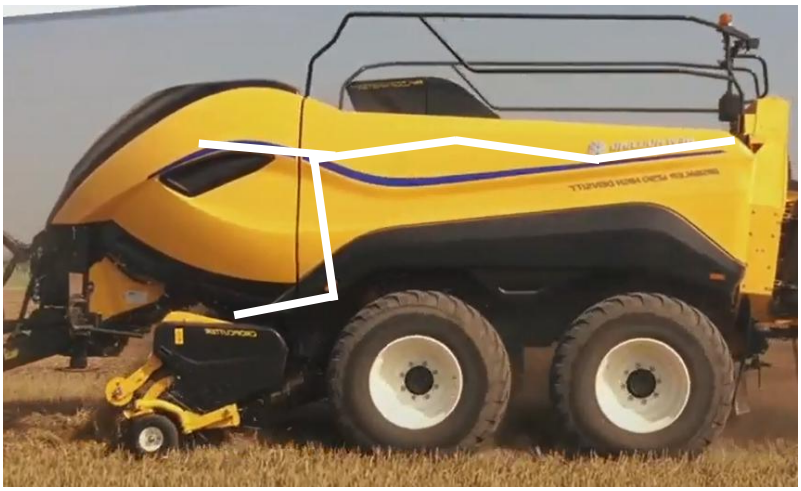

Route harness (006-765B2) along inside of the baler (left hand side). Keep harnesses away from moving parts and hydraulic hoses. Secure with existing cable clamps or use cable ties. Once all connections are made on the harness, connect to the IPM module and secure all harness wires.

Locate and remove the Active Terminator of baler (below). Attach Baler Interface Harness (006-765VA) to that location on baler.

Reconnect the baler Active Terminator to the open port near the end of the 006-765VA harness. This terminator may be located on the plate that is behind the baler's main ECM processor.

A. Route harness 006-765B2 along this path or similar inside of the baler. Keep harnesses away from moving parts and hydraulic hoses. Secure with existing cable clamps or use cable ties. When all connections are made to the ISO Pump Module (IPM) secure wires to allow for water to be shed away from the IPM.

B. The Baler Power/Communication Harness (006-765B2) will attach to the open port of the Tractor Harness (006-765IC) and run back to the ISO Pump Module (006-7671LS). Connect the large plug of the Baler Power/Communication Harness (006-765B2) to the plug of the IPM.

C. Attach Baler Interface Harness (006-765VA) to the additional CAN port at front of baler. Make sure Active Terminator is removed from the back underside of the baler is attached to the Baler Interface Harness (006-765VA).

D. Once Baler Interface Harness is connected to the CAN plug, power up the applicator system and setup baler display settings to allow Harvest Tec applicator to communicate. See ISO DISPLAY SETUP pages for further instruction on how to setup baler display settings.

Main Control Modules and Wiring Harnesses

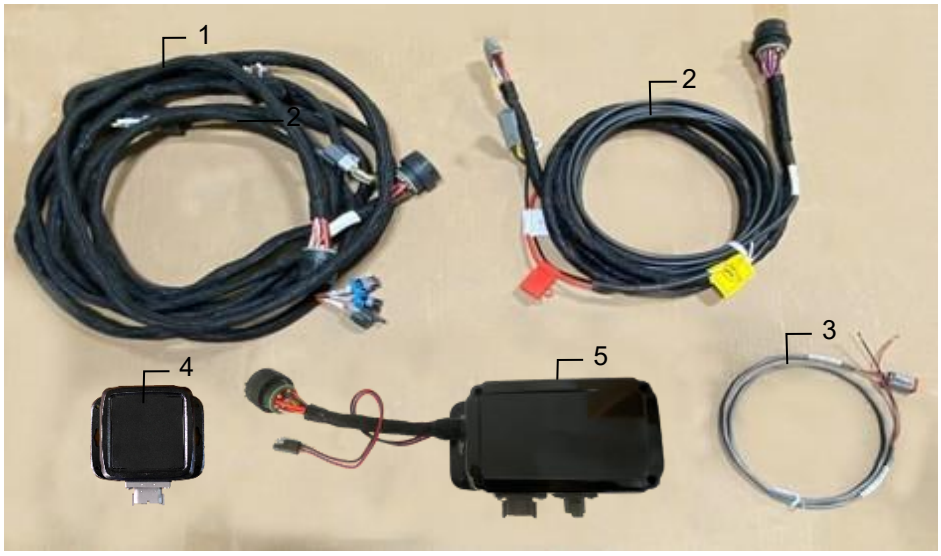

Ref	Description	Part#	Qty
1	Power Lead Baler 35’	006-765B2	1
2	Power Lead Tractor	006-765IC	1
3	Key Switch Wire	006-765CPH	1
4	ISO Pump Module (IPM)	006-7671LS	1
5	ISO Communication Module (ICM)	006-6673	1
NP	Dust Plug Kit	006-765DP	1
NP	120 Ohm Resistor (For use as non-ISO integrated units)	006-700R	

Ref	Description	Part#	Qty
NP	Baler Integration Harness	006-765VA	1
NP	Baler Integration Extension (Required only for pre-2012 Agco Balers)	006-6650VAX	1
NP	Baler Integration Harness (Krone Balers Only)	006-765VAK	1
NP	Baler Integration Harness (Krone Gen. 5 Balers Only)	006-765VAK2	1
NP	USB-C to USB-A Comm.Cable (Optional use for tablet connection)	006-6672USBX	

Star Wheel Moisture Sensors (MSH-LS-BBHD)

001-4644BBHD

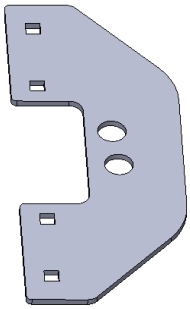

1. Locate both star wheel moisture sensors (030-4642U and 030-4642UE) and star wheel reinforcement brackets (001-4644BBHD, shown right) and hardware parts bag.

2. The two pre-drilled mounting holes for the star wheels are located past the knotters on the side of the top support bar running the length of the bale chute (Figure 1).

3. Position the star wheel mounting holes and mark the width of the star wheel 4” (112mm). As well as the depth of the star wheel of 2” (50mm). This piece will need to be removed from the baler bracket in order for star wheel to fit flush with baler bracket (Figure 2). After cutting touch up with paint to prevent rusting.

4. Mount star wheel with two position plug on right side of baler when looking at the back. Mount star wheel with six position plug to left side or ladder side of baler. Ensure that the encoder star wheel turns in a clockwise rotation when bale is moving through the baler. See rotation diagram sticker on star wheel as reference. Hand tighten with wrench or ratchet- not to exceed 13 ft-lb torque. **DO NOT USE AN IMPACT TO TIGHTEN.** Over torquing star wheel mounting hardware can cause pre-mature wear of the star wheel blocks.

5. Position reinforcement brackets (001-4644BHD) around the star wheel. Shown mounted in Figure 3. Repeat mounting the star wheel and installation of the reinforcement bracket on the right side of baler. Used supplied 3/8” x 3/4” Carriage bolts and flange nuts to secure

6. Attach harness (006-7307EM2) wires to star wheels and route to (IPM) module and connect to the square plug on it.

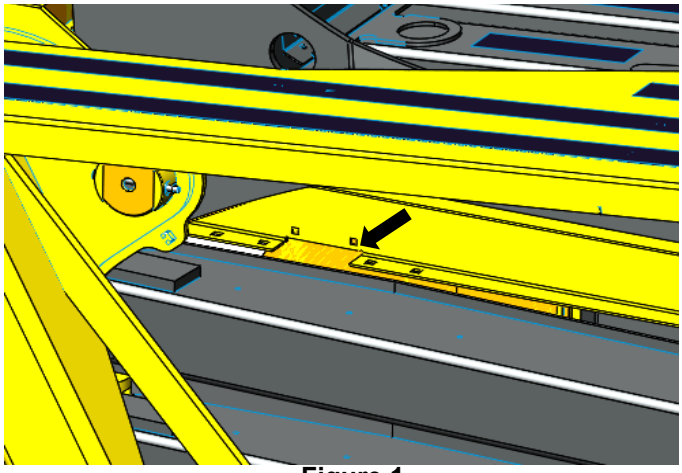

Figure 1

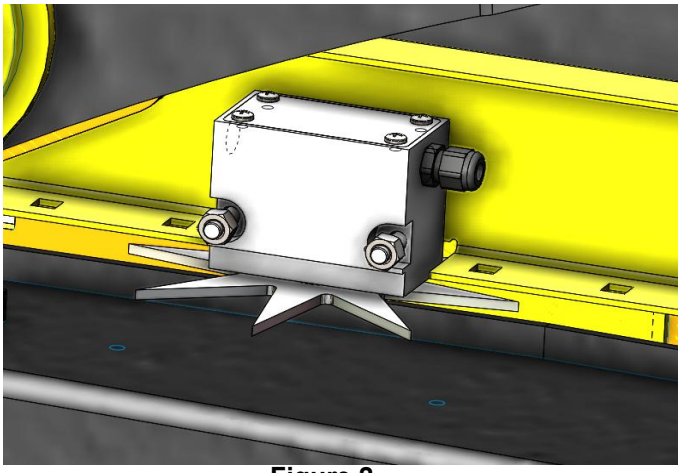

Figure 2

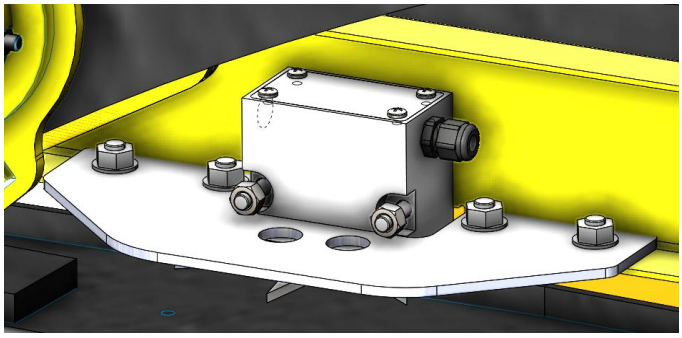

Figure 3

Star Wheel Sensors- 700 Series

For CNH HD Large Square Balers – Reinforced Yellow Block 2026

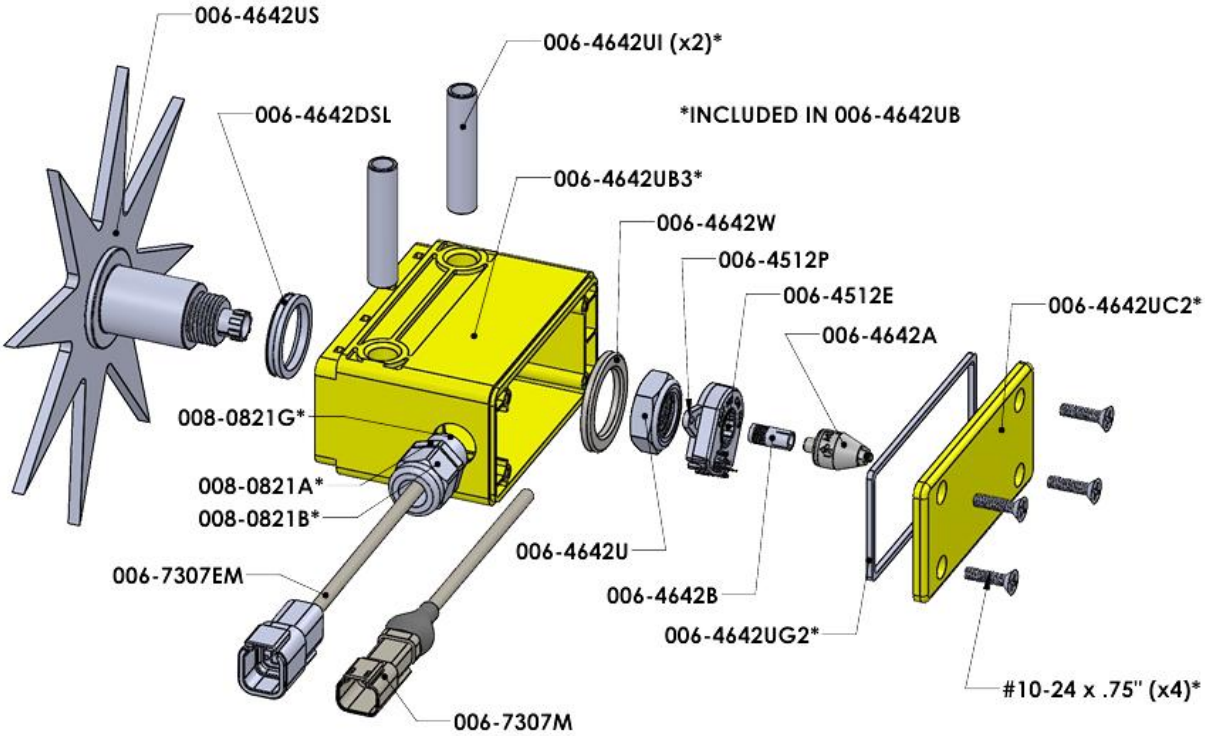

Description	Part#	Qty
Star Wheel (includes swivel insert)	006-4642US	1
Dust Seal Gasket	006-4642UG	1
Star Wheel Block Only	006-4642UB3	1
Star Wheel Block End Cap	006-4642UEC	1
Block Inserts	006-4642UI	2
Wire Compression Grommet	008-0821A	1
Grommet Locking Nut (internal)	008-0821B	1
Washer for Wire Grommet	008-0821G	1
Bearing Washer	006-4642W	1
Star Wheel Nut	006-4642U	1
Encoder Mount (030-4642UE only)	006-4512P	1
Encoder (030-4642UE only)	006-4512E	1
Swivel Insert	006-4642B	1
Swivel Insert	006-4642B	1
Electric Swivel	006-4642A	1
Electric Swivel	006-4642A	1
Star Wheel Block Gasket	006-4642UG2	1
Star Wheel Block Cover	006-4542UC2	1

Description	Part#	Qty
Encoder Harness Plug (6 Pin) (030-4642UE only)	006-7307EM	1
Moisture Harness Plug (2 Pin) (030-4642U only)	006-7307M	1
Star Wheel Reinforcement Brackets	001-464BBHD	2

Star Wheel Drilling Template (optional)	001-4642T
Replacement Star Wheel Block (includes asterisked parts in picture above)	001-4642UB
Complete Non-Encoder Star Wheel	**030-4642U**
Complete Encoder Star Wheel	**030-4642UE**
Moisture Harness- Standard (12' and 13' Section lengths)	006-7307EM2
Complete Moisture Kit*- HD Balers	**MSH-LS-BBHD**

* complete moisture kit includes one of each star wheel, two reinforcement brackets and one moisture harness

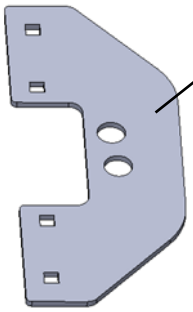

Star Wheel Reinforcement Bracket

Moisture Harness

End of Bale Sensor (EOB)
CNH BBHD Balers

The End of Bale sensor determines the position of the needles on the baler. When the needles cycle the sensor communicates this information to the ISO Communication Module (ICM). Installation of this sensor is required for use with the Harvest Tec job records. Reference “Sensor Settings” in Operation Manual.

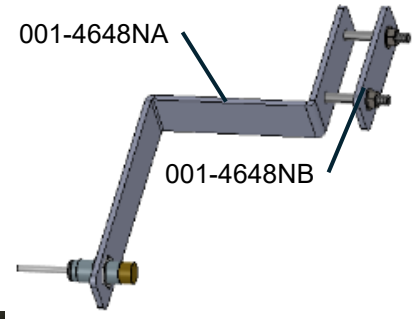

Mount the end of bale sensor bracket (001-4648NA and 001-4648NB) as shown on the back right of the baler (opposite of the ladder). This bracket will clamp to the diagonal support using the backing plate and supplied hardware (5/16” x 1 ½” hex bolt with flat washer, lock washer, and nut). There is no exact placement, the sensor just needs to see the needle arm when in the home position. Adjust sensor in or out so that it is about ¼” away from the needle arm and tighten both nuts. Be sure it is not making contact, causing damage, or not too far away from the needle arm, preventing it from reading.

Run the sensor cable (006-7401) and extension cable (006-7401BBEXT) up to main harness (006-765B2) and attach to EOB plug.

End of Bale Sensor

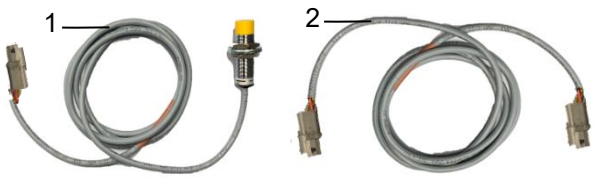

Ref	Description	Part #	Qty
1	End of Bale Sensor	006-7401	1
2	End of Bale Ext.	006-7401EXT	1

Tractor Setup

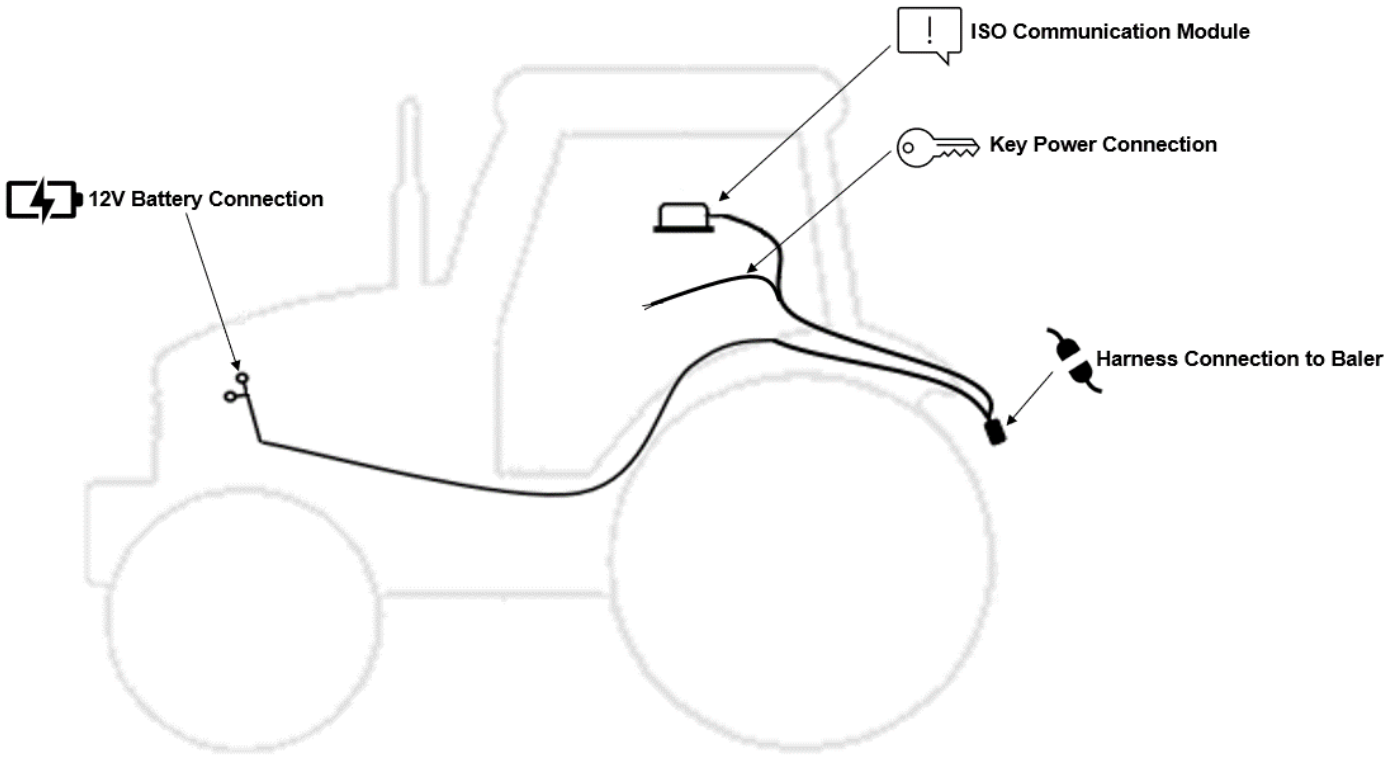

The general tractor setup of the 700 Series applicator can be seen above. The main harness of interest is the tractor power/communication harness (006-765IC). This harness will connect at the tractor battery, to the ISO Communication Module (ICM) mounted in the cab, a keyed power connection point, and connect at the hitch area to the baler power/communication harness (006-765B2). View below to see highlighted installation instruction:

12V Battery Connection

The 12V battery connection must be at the tractor battery. Connection to alternative locations such as an accessory port can cause problems with applicator system.
MUST BE CONNECTED DIRECT TO TRACTOR BATTERY TERMINALS

ISO Communication Module

The ISO communication module is to be mounted inside the cab. Other mounting locations can lead to issues with weathering and operation. Once installed and the system is powered, a green light will turn on with the ICM module.

Key Power Connection

Ensure a solid keyed connection is found inside the cab and wired into. Poor keyed power connection can result in applicator system issues.

Harness Connection to Baler

The tractor harness connects at the hitch to baler power/communication harness (006-765B2). This will allow the system components to communicate with one another. Ensure connections are debris and corrosion free.

Display Options

Optional Harvest Tec Display

The 700 series Harvest Tec Display will allow you to set your real time baling parameters to ensure the most precise application to every bale. This is done by utilizing the improved touch technology to select objects, enter data, and swipe through operational screens.

The Harvest Tec Display offers easy integration by connecting to the additional CAN plug on the 006-765IC harness. Once, connected the Harvest Tec display will power up with applicator system.

Note: The Harvest Tec Display must be used as a standalone display, the baler cannot run both integrated and on the Harvest Tec Display. Must be one or the other. Removal of the 006-765VA or integration harness is required when equipped.

Optional Tablet Display

Precision Baling App

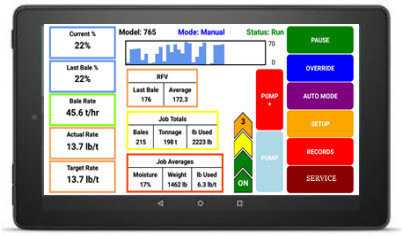

The iOS or Android Tablet displays offer the ability to communicate with the 700 series applicator system via hard-wired connection to the ISO Communication Module (ICM). Through the free Precision Baling App, the operator can set real time baling parameters to ensure the most precise application to every bale. This provides a multi-use option while utilizing the improved app to select objects, enter data, and easily switch through operational screens. The Tablet Display offers easy integration by connecting a charging cable to the USB port on the ICM module. Once connected the Harvest Tec applicator will display upon opening the app and powering up the applicator system. Tablets can be used in addition to integrated baler VT display.

***Made for iPad®**
Required to be running the most current operating system or one version previous.
*iPad is a trademark of Apple Inc., registered in the U.S. and other countries.

Optional Harvest Tec Display Kit (030-7670DK)

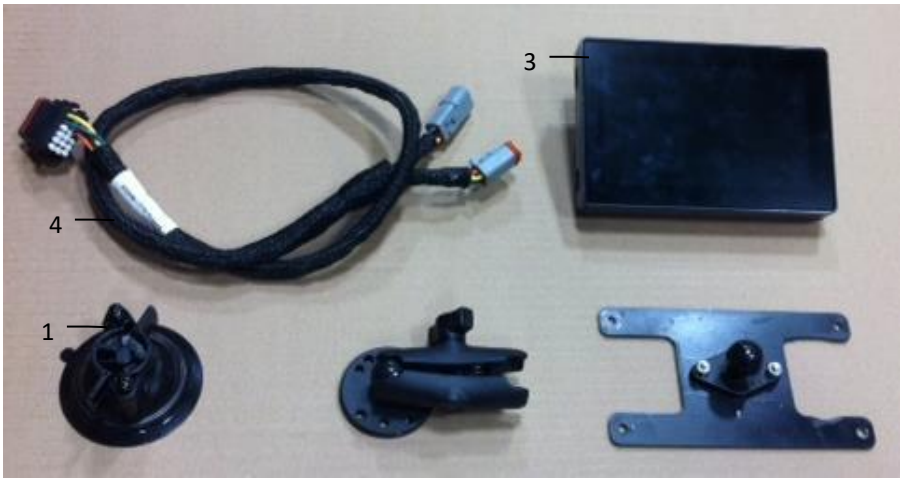

Ref	Description	Part #	Qty
1	Suction Cup Mount	001-2012SCM	1
2	Ram Mount	001-2012H	1
3	Harvest Tec Display	006-765GVT	1
4	Display Harness	006-765GH	1
5	Mounting Plate	001-700GH	1
NP	700 Series Resistor	006-700R	1

Complete HT Display Kit 030-7670DK

Installation Instructions

1. Connect 006-765GH harness connection to 006-765IC tractor harness key power plug.
2. Connect 006-765GH harness to the Harvest Tec VT Display before tightening mount in place.
3. Tighten the mounting and display. Streamline harness as necessary.
4. Once connected, power cycle the system and ensure display is working properly.

NOTE: CANNOT OPERATE APPLICATOR SYSTEM WITH HARVEST TEC DISPLAY AND BALER ISO INTEGRATION or TABLET/ iPad AT THE SAME TIME.

Optional Android Display Kit (030-1670DK)

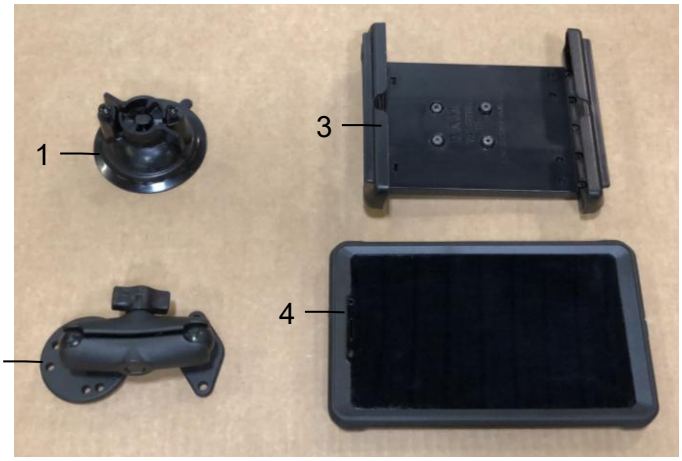

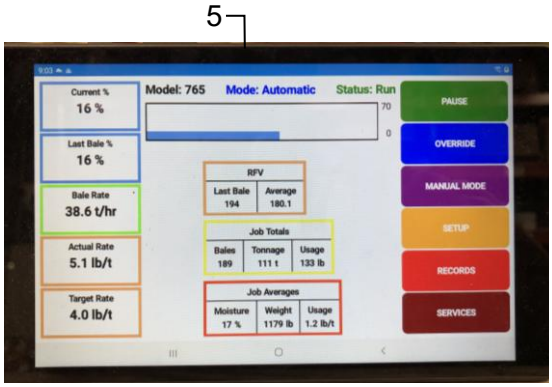

Ref	Description	Part #	Qty
1	Suction Cup Mount	001-2012SCM	1
2	Ram Mount	001-2012H	1
3	Spring Load Cradle	001-2012SLC	1
4	Android Case	001-2012A1	1
5	Android Tablet	006-1670AT	1
NP	USB-C to USB-A Cable	006-6672USBX	1

Complete Android Tablet Display Kit **030-1670DK**

Note: Use a quality communication cable ending with a USB-A connection to connect tablet to (006-765ICM) control module - plug into the USB port showing a tablet.

Optional iPad Display Kit (030-6670DK)

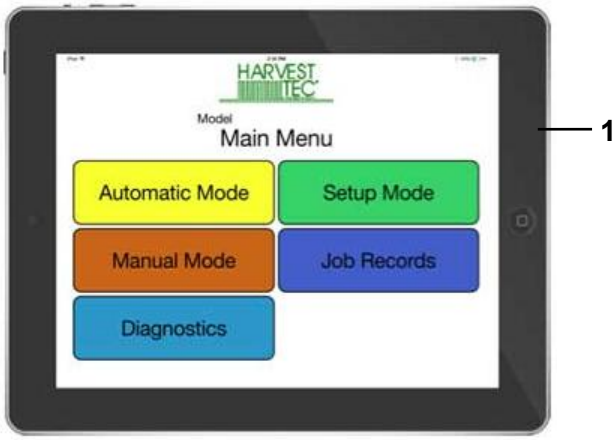

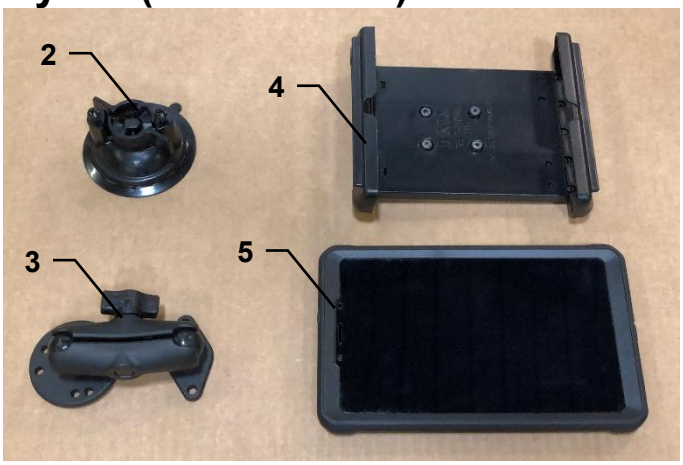

Ref	Description	Part #	Qty
1	iPad Mini 6	006-6670IP	1
2	Suction Cup Mount	001-2012SCM	1
3	Ram Mount	001-2012H	1
4	Spring Load Cradle	001-2012SLC	1
5	iPad Mini 6 Case	001-2012C6	1
NP	Power/Comm. Cable	006-6672USBX	1

Complete iPad Mini Display Kit **030-6670DK**

iPad mini is a trademark of Apple Inc., registered in the U.S. and other countries

Optional ISO Display Adapter Harness (006-7670A or 006-7670F)

For use with a dedicated ISO display

The 700 Series Applicator has the option to tie into compatible dedicated ISO monitors by utilizing the diagnostic port. When connected, the Harvest Tec System will populate as its own object pool within the ISO display. When this object pool is selected, the ISO monitor will then function as a dedicated monitor for the Harvest Tec System.

The Harvest Tec System will function as a stand-alone system when using this adapter.
System will not integrate with the baler ISO system software when using this adapter.

Any tablet connected to the ICM module must be disconnected from the ICM before the Harvest Tec Object Pool screen will activate within the ISO display.
To connect Adapter Harness (006-7670A or 006-7670F), unplug the 4-pin Key Power Plug (006-765CPH) connection from the Tractor Harness (006-765IC) and replace with the plug from the Adapter Harness. Connect the round plug end of the Adapter Harness to the Tractor ISO Display Diagnostic port.

Scan the QR code to view a short video of the
Adapter Harness for ISO Display:

For additional product and service information:
See our YouTube Channel https://www.youtube.com/@harvesttec

ISO Diagnostic Port Adapter (006-7670A)

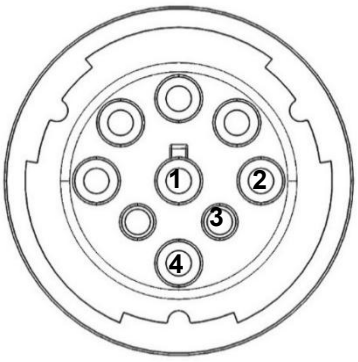

006-7670A connecting plug and pin out

Pin 1	Black	Ground
Pin 2	Yellow	CAN High
Pin 3	Green	CAN Low
Pin 4	Red	12V+ Key Power

ISO Diagnostic Port Adapter (006-7670F)

For Newer Fendt and MF Tractors with plug location in the cab ceiling

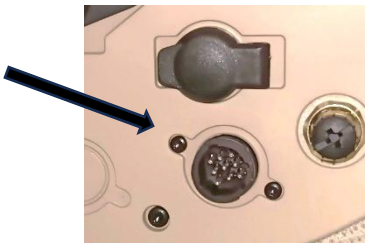

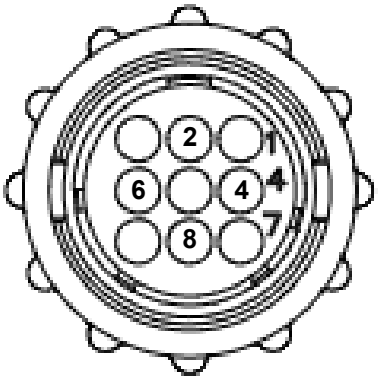

006-7670F connecting plug and pin out

Pin 8	Black	Ground
Pin 4	Yellow	CAN High
Pin 2	Green	CAN Low
Pin 6	Red	12V+ Key Power

Optional Baler VT Integration (for compatible CNH ISO balers)

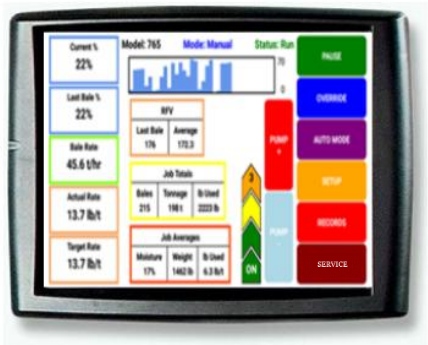

The 700 series integration to the Baler VT allows for the ability to set your real time baling though the baler VT and monitor both baler settings and Harvest Tec system parameters on one screen to ensure the most precise application to every bale.

The 700 series offers easy integration by connecting to the additional CAN plug on the 006-765B2 harness. Once connected the Harvest Tec system will display with power up of the baler and applicator system.

Baler Display Integration

The ISOBUS Monitor utilizes touch screen options to make selections. Selections are made by finding the desired selection and pressing the touch screen icon. All buttons are labeled and color coded.

ISO Baler Integration Setup – CNH balers

Follow the steps below to setup the integration of the 700 Series into the Pro 1200 Series Monitor.

1. Select the baler Setup Tab in the top right corner of the baler run screen.

2. Open the Diagnostics Tab by selecting the (stethoscope icon) and then the System Information Tab.

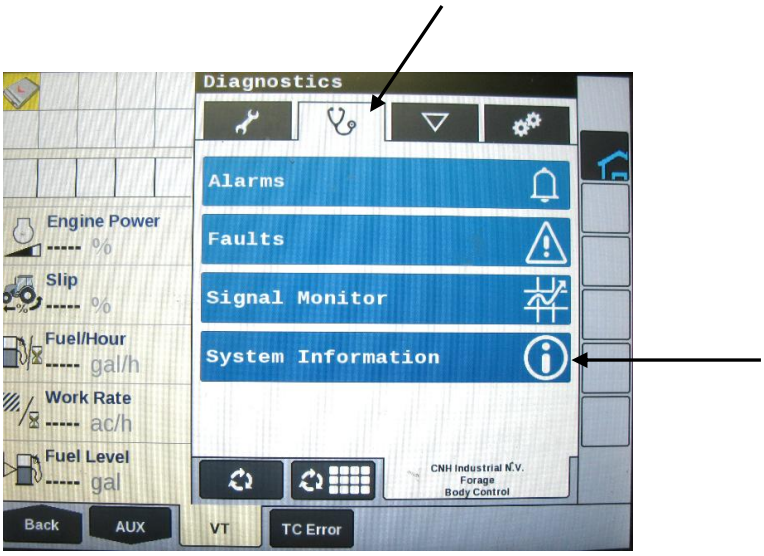

3. On the System Information page, activate Dealer Mode by pressing and holding the first blank square box under the down arrow on the right side of the screen for 10 seconds.

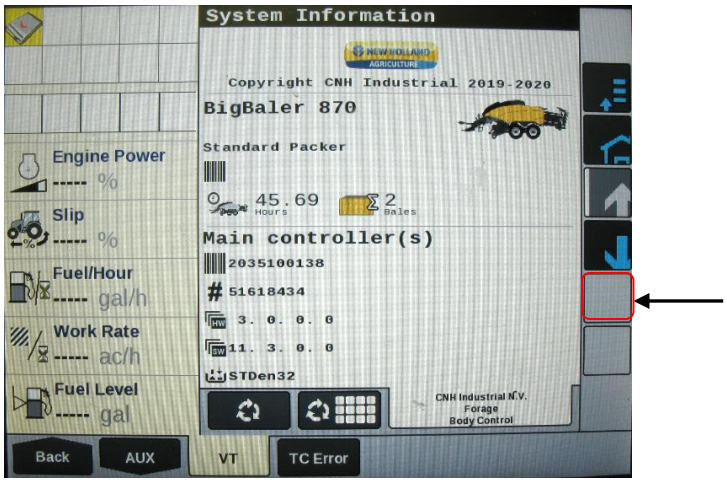

700BBHD Integration Instructions (continued)

4. After 10 seconds the first screen below will appear prompting you for a code.
   Press the ‘0’ and enter the Code 1379 when the numbers appear.

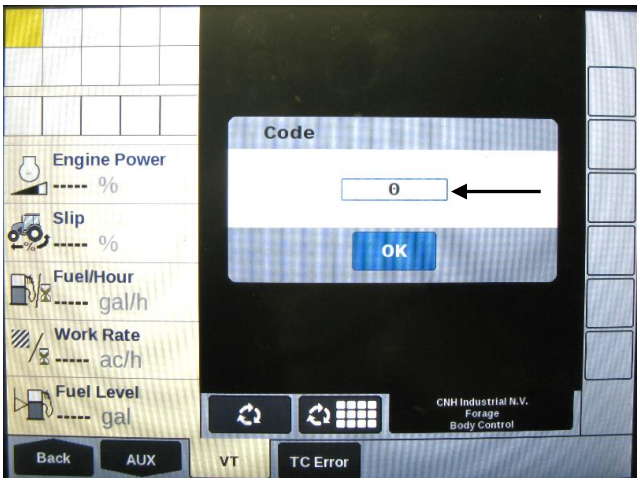

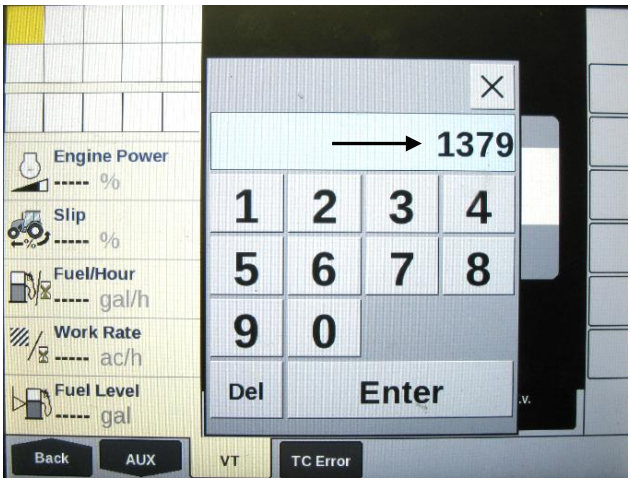

The screen below will appear alerting you ‘Dealer Mode Activated’. Press OK and go back to the balers home screen.

5. Select the baler Setup tab in the top right corner of the baler run screen. Then press Machine Configuration from the baler setup page (wench icon at top).

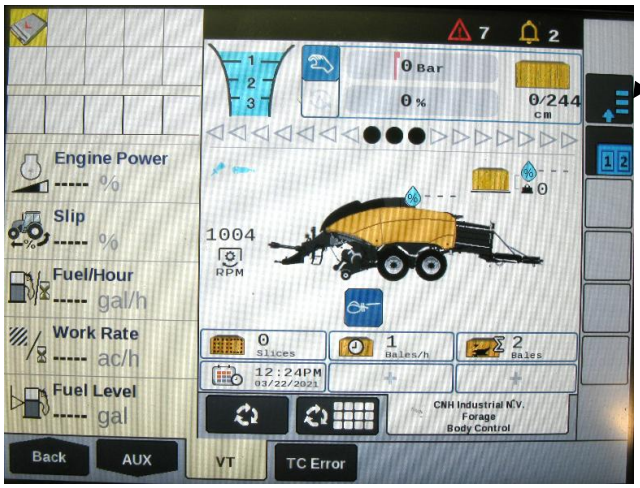

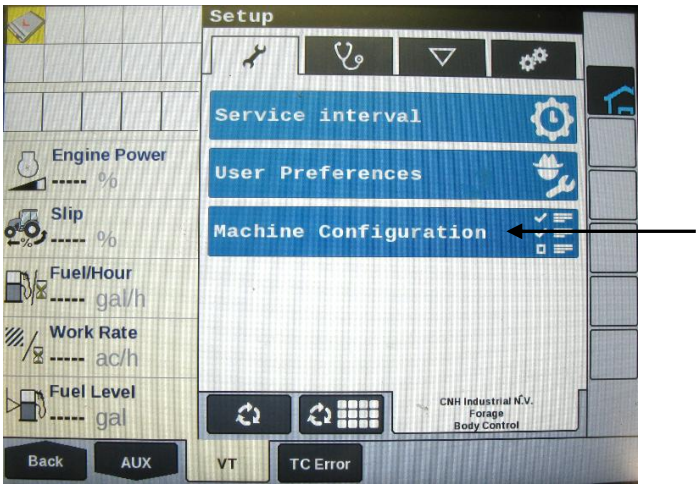

CNH ISO Integration Instructions (continued)

6. Select the Moisture Sensor line on the Machine Configuration screen. On the next screen that appears select ‘Starwheel Extension’ from the drop down for Harvest Tec 700 Series Preservative Applicator and 700 Moisture Only systems. ‘Starwheel Moisture’ refers factory installed starwheel moisture system kits.

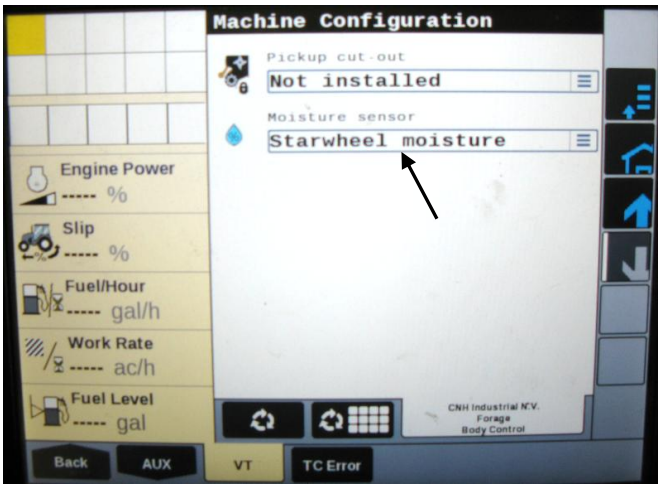

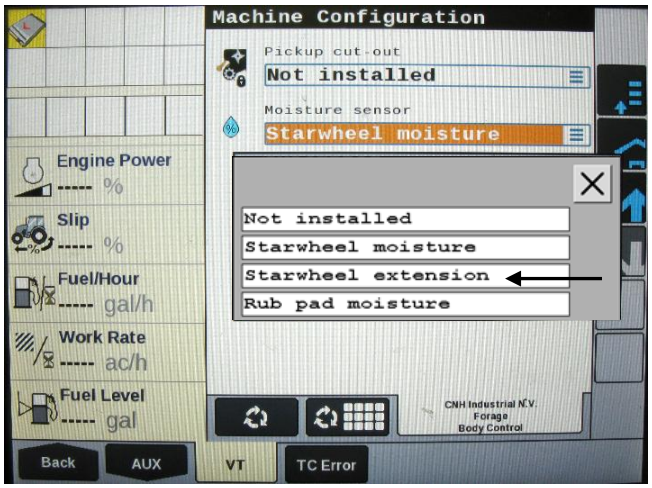

The moisture sensor selection will now read Starwheel Extension on the Machine Configuration page.

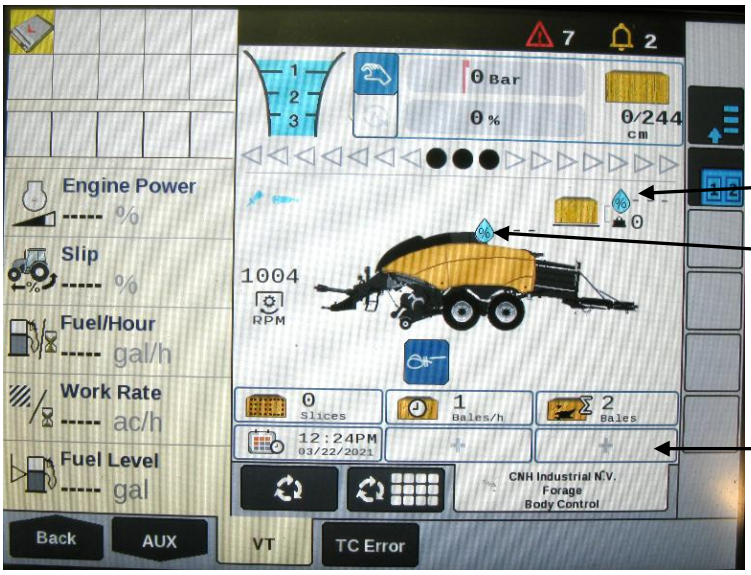

The current bale moisture content will now display above the baler next to the water droplet and the previous bale moisture will display next to the bale in above the are above the bale chute (below).

Previous Bale Moisture

Current Bale Moisture

Use the (+) signs to add any other Harvest Tec Options that you would like to have show on your baler run screen.

Refer to the 700 Series Large Square Baler Operation Manual to view the operation details

Wiring Diagram – 700 Series

1. Connect the power harness (006-765IC) to the tractor battery (12 volt) using the red wire with fuse to the positive side and the black wire to the negative.
   A. **The power harness must be connected to the battery!**
   CONTACT HARVEST TEC BEFORE MODIFICATIONS.
   The unit will draw more amps than convenience outlets can handle. Any modifications of the power harness will void systems warranty
   B. **This unit will not function on positive ground tractors.**
   C. **If the unit loses power while operating it will not keep track of accumulated pounds of product used.**
2. The power harness on the tractor (006-765IC) will run from the tractor battery to the hitch. The power harness on the baler (006-765B2) will connect to the tractor power harness (006-765IC) at the hitch.
3. Connect the keyed power wire (006-765CPH) to a keyed power source on the tractor.
   The keyed power wire must connect to a keyed source or the unit will not power up correctly.
4. Attached the ISO Communication Module (006-7671) to the tractor power harness (006-765IC).
5. Attach the End of Bale (EOB) connection on baler harness (006-765B2) to the EOB Sensor (006-7401).
6. Attach the Flowmeter (006-4724A) to ISO Pump Module connection on pump plate assembly.
7. Attach the rubber molded connector on pump plate to the Pump (007-4120DE).
8. Attach star wheel (030-4642 U/UE) connection to ISO Pump Module on pump plate assembly.

System Wiring Diagram

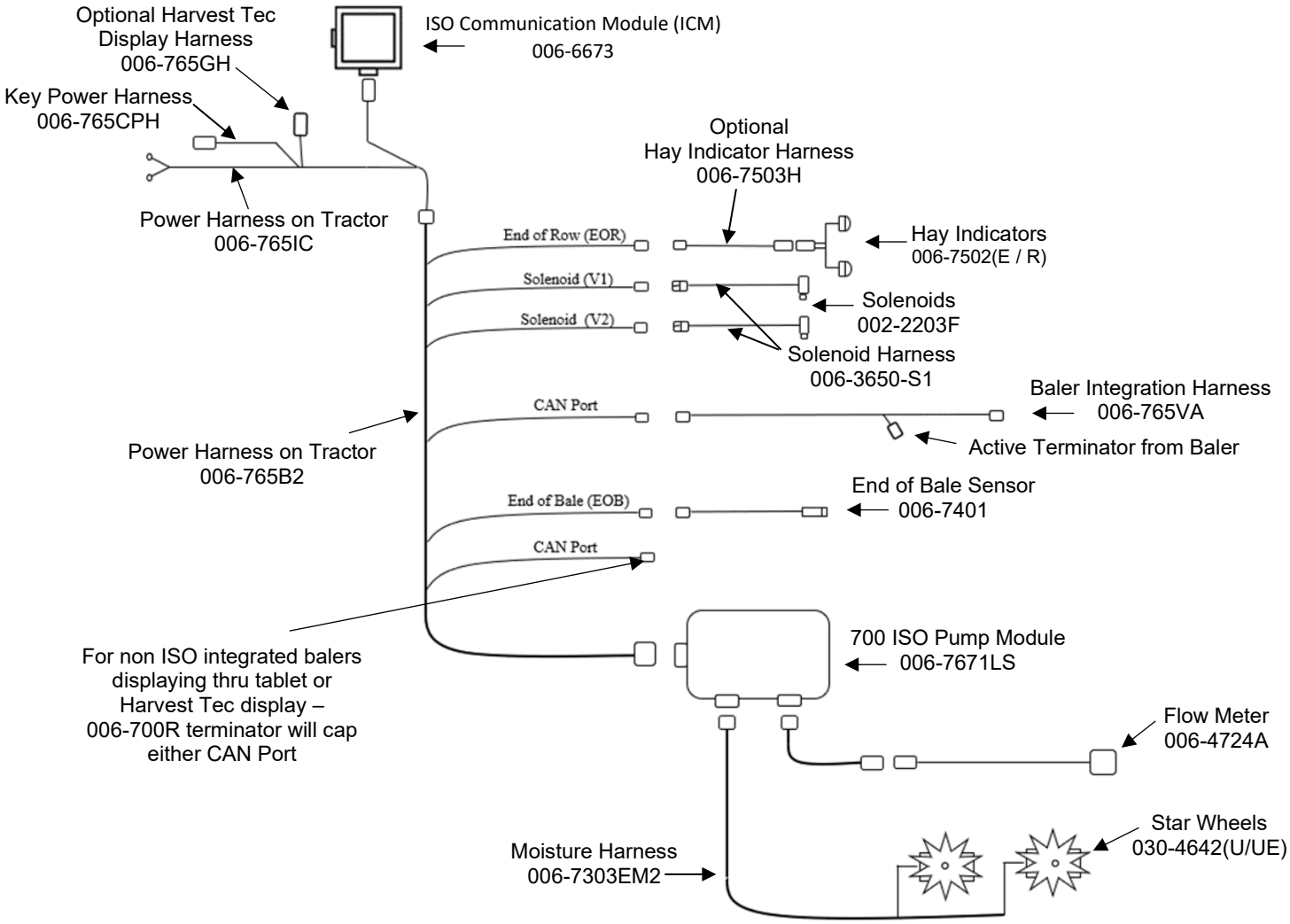

Pin Outs

Integrated Control Module (ICM) on Tractor Harness 006-765IC

(Deutsch Plug Number: DTM06-12SA)

Pin 1	Red	+12V from ECU
Pin 2	Purple	Signal Wire
Pin 3	Red/White	+12V CAN X
Pin 4	Black/White	Ground CAN X
Pin 5	Orange	CAN X Hi
Pin 6	Blue	CAN X Lo
Pin 7	Green	ISO CAN Lo
Pin 8	Yellow	ISO CAN Hi
Pin 9	White	GPS Extension 1
Pin 10	Gray	GPS Extension 2
Pin 11	Brown	GPS Extension 3
Pin 12	Black	Ground from ECU

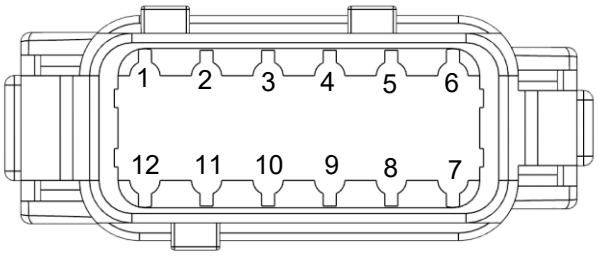

ISOBUS Plug on Tractor Harness 006-765IC

(Deutsch Plug Number: DT04-4P)

Pin 1	Red	+12V from ECU
Pin 2	Yellow	ISO CAN Hi
Pin 3	Green	ISO CAN Lo
Pin 4	Black	Ground from ECU

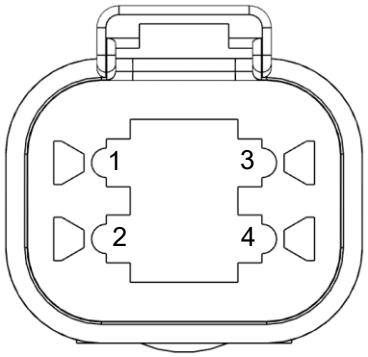

Power / Communication Tractor Harness 006-765IC at Hitch

(Deutsch Plug Number: HDP24-24-18PN)

Pin 1	Not Used	----
Pin 2	Yellow	ISO CAN Hi
Pin 3	Green	ISO CAN Lo
Pin 4	Red	+12V Power to ECU
Pin 5	Black	Ground to ECU
Pin 6	Red	+12V From Battery
Pin 7	Not Used	----
Pin 8	Black	Ground From Battery
Pin 9	Not Used	----
Pin 10	Purple	Signal Wire
Pin 11	Red/White	+12V CAN X
Pin 12	Black/White	Ground CAN X
Pin 13	Orange	CAN X Hi
Pin 14	Blue	CAN X Lo
Pin 15	White	GPS Extension 1
Pin 16	Gray	GPS Extension 2
Pin 17	Brown	GPS Extension 3
Pin 18	Not Used	----

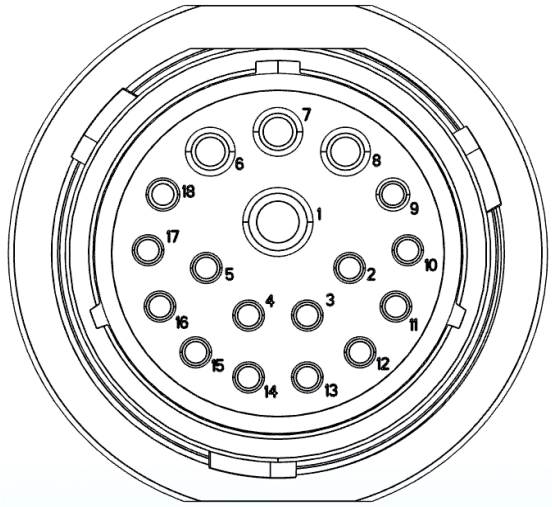

Power / Communication Baler Harness 006-765B2 at Hitch

(Deutsch Plug Number: HDP26-24-18SN)

Pin 1	Not Used	----
Pin 2	Yellow	ISO CAN Hi
Pin 3	Green	ISO CAN Lo
Pin 4	Red	+12V Power to ECU
Pin 5	Black	Ground to ECU
Pin 6	Red	+12V From Battery
Pin 7	Not Used	----
Pin 8	Black	Ground From Battery
Pin 9	Not Used	----
Pin 10	Not Used	----
Pin 11	Not Used	----
Pin 12	Not Used	----
Pin 13	Not Used	----
Pin 14	Not Used	----
Pin 15	Not Used	----
Pin 16	Not Used	----
Pin 17	Not Used	----
Pin 18	Not Used	----

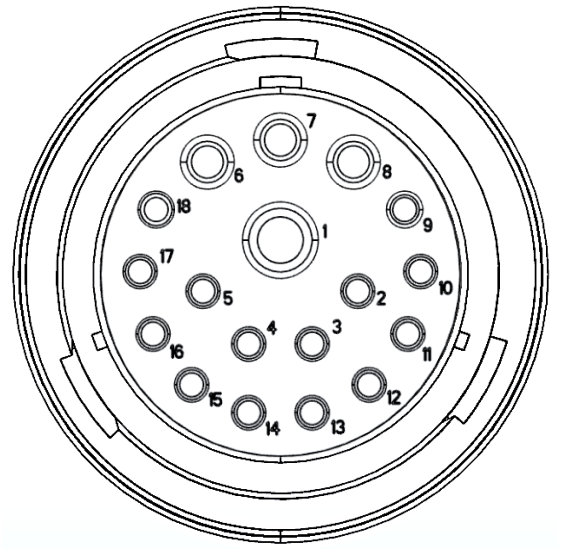

Power / Communication Baler Harness 006-765B2 at IPM Module

(Deutsch Plug Number: HDP24-24-18SN)

Pin 1	Not Used	----
Pin 2	Yellow	ISO CAN Hi
Pin 3	Green	ISO CAN Lo
Pin 4	Red	+12V Power to ECU
Pin 5	Black	Ground to ECU
Pin 6	Red	+12V From Battery
Pin 7	Not Used	----
Pin 8	Black	Ground From Battery
Pin 9	Not Used	----
Pin 10	Orange/White	+12V Power to EOR
Pin 11	Orange/Black	Ground to EOR
Pin 12	Purple/Green	EOR Signal
Pin 13	Blue/White	EOB Signal
Pin 14	Gray/Red	+12V Power to Solenoid 1
Pin 15	White/Black	Ground to Solenoid 1
Pin 16	Orange/Red	+12V Power to Solenoid 2
Pin 17	White/Black	Ground to Solenoid 2
Pin 18	Not Used	----

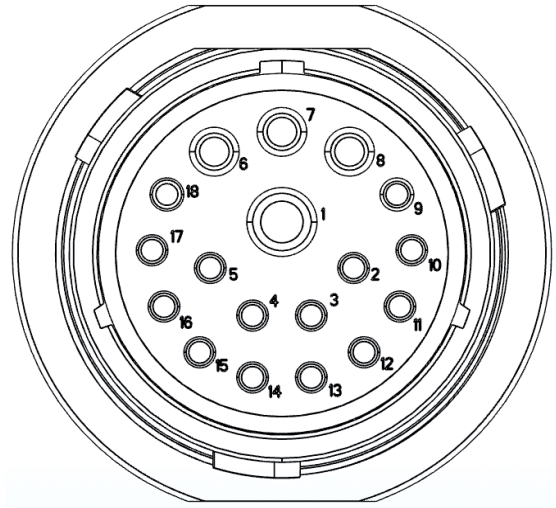

Solenoid 1 Plug on Baler Harness 006-765B2

(Deutsch Plug Number: APTIV 12052641)

Pin B	Gray/Red	+12V to Solenoid 1
Pin A	White/Black	Ground to Solenoid 1

Solenoid 2 Plug on Baler Harness 006-765B2

(Deutsch Plug Number: APTIV 12052641)

Pin B	Orange/Red	+12V to Solenoid 2
Pin A	White/Black	Ground to Solenoid 2

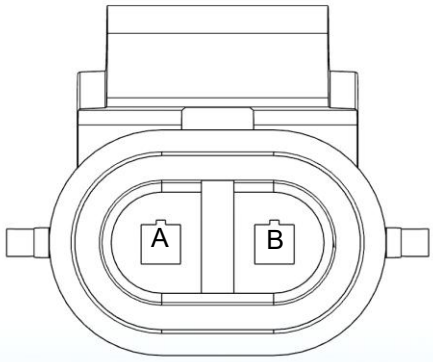

CAN / IDM on Baler Harness 006-765B2

(Deutsch Plug Number: DT06-4S)

Pin 1	Red	+12V to ECU
Pin 2	Yellow	ISO CAN Hi
Pin 3	Green	ISO CAN Lo
Pin 4	Black	Ground to ECU

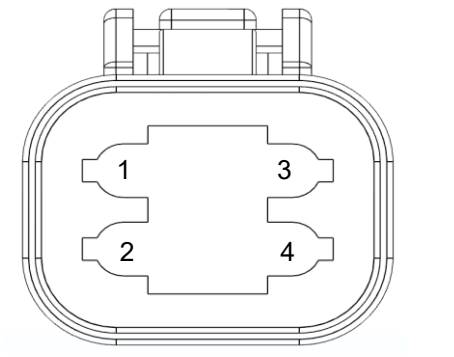

End of Bale Sensor Plug on Baler Harness 006-765B2

(Deutsch Plug Number: DT06-3S)

Pin 1	Orange/White	+12V to End of Bale Sensors
Pin 2	Orange/Black	Ground to End of Bale Sensors
Pin 3	Blue/White	Signal

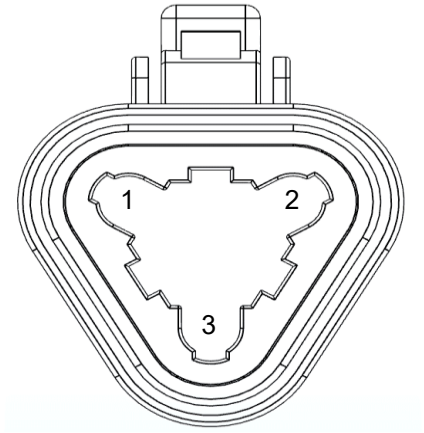

End of Row Sensors Plug on Baler Harness 006-765B2

(Deutsch Plug Number: DT06-3S)

Pin 1	Orange/White	+12V to End of Bale Sensors
Pin 2	Orange/Black	Ground to End of Bale Sensors
Pin 3	Blue/White	Signal

Integration Harness Plug on Baler Harness 006-765VA

(Plug: APTIV 12052848)

Pin A	Not Used	----
Pin B	Red	TBC Power
Pin C	Not Used	----
Pin D	Gray	TBC Ground
Pin E	Orange	CAN Hi
Pin F	Blue	CAN Lo

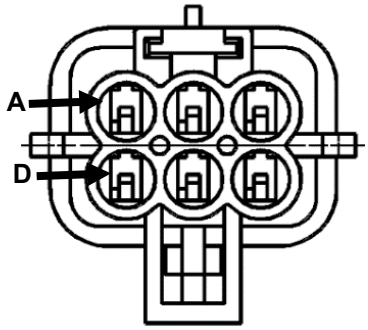

Pump Connection on 700 IPM Controller Harness

(16 AWG Two-Wire Plug)

Pin 1	Red	Power to Pump
Pin 2	Black	Ground to Pump

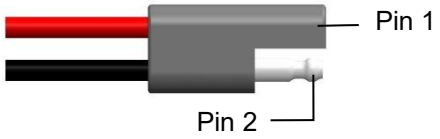

Harvest Tec LLC. Warranty and Liability Agreement

Harvest Tec, LLC. will repair or replace components that are found to be defective within 12 months from the date of manufacture. Under no circumstances does this warranty cover any components which in the opinion of Harvest Tec, LLC. have been subjected to negligent use, misuse, alteration, accident, or if repairs have been made with parts other than those manufactured and obtainable from Harvest Tec, LLC.

Our obligation under this warranty is limited to repairing or replacing free of charge to the original purchaser any part that in our judgment shows evidence of defective or improper workmanship, provided the part is returned to Harvest Tec, LLC. within 30 days of the failure. If it is determined that a non-Harvest Tec manufactured product has been used inside the Harvest Tec applicator system where the failure occurred, then Harvest Tec reserves the right to deny the warranty request at their discretion. Parts must be returned through the selling dealer and distributor, transportation charges prepaid.

This warranty shall not be interpreted to render Harvest Tec, LLC. liable for injury or damages of any kind, direct, consequential, or contingent, to persons or property. Furthermore, this warranty does not extend to loss of crop, losses caused by delays or any expense prospective profits or for any other reason. Harvest Tec, LLC. shall not be liable for any recovery greater in amount than the cost or repair of defects in workmanship.

There are no warranties, either expressed or implied, of merchantability or fitness for particular purpose intended or fitness for any other reason. This warranty cannot guarantee that existing conditions beyond the control of Harvest Tec, LLC. will not affect our ability to obtain materials or manufacture necessary replacement parts.

Harvest Tec, LLC. reserves the right to make design changes, improve design, or change specifications, at any time without any contingent obligation to purchasers of machines and parts previously sold.

Revised 1/24

HARVEST TEC, LLC.
P.O. BOX 63
2821 HARVEY STREET
HUDSON, WI 54016 USA
PHONE: 715-386-9100
FAX: 715-381-1792
Email: info@harvesttec.com