Installation Manual

Model 742M, 744,745,750 & 751

25 & 55 gallon Automatic Preservative Applicator for Small Square Balers

HarvestTec®

EST. 1976

742M-744-745-750-751-26-INST-Imp&Metric
9/26

Harvest Tec 742M, 744, 745, 750 & 751 Installation Table of Contents

	Page
Introduction, Model Reference, & Tools Needed	**3**
Installation of Applicator	**4-33**
Tank Saddle Kit	**4-12**
Model 742M	4-5
Model 744	6-8
Model 745	9
Model 750	10
Model 751	11-12
Drain Fill Line Kit	**13-14**
Pump Plate Assembly	**15**
Pump Plate Mounting	16-18
Main Controls and Wiring Harnesses	**19**
Main Harness Routing and Connections	19
Placement of Spray Nozzle Assembly	**20-24**
Install kit 4409C	20
Install kit 4410C	20
Install kit 4412C	20
Install kit 4415C	21-22
Install kit 4416C, 4416-SO, 4417C, 4418C & 4485C	23
Install kit 4502C	23
Install kit 4506C	24
Install kit 4507C	24
Plumbing Routing and Solenoid	**25-26**
End of Bale Sensor	**27**
Optional Stroke/Flake Counter Kit	**28-29**
Moisture Star Wheel Sensors	**30-34**
Tractor Set Up	**35**
Display Options	**36-39**
Optional HT VT Display Kit	**37**
Optional Tablet Display Kits	**38**
Optional ISO Display Adapter	**39**
Wiring Diagram	**40**
Pin Outs	**41-43**
Installation Kit Parts Breakdowns	**44-54**
Warranty Statement	**55**

Introduction

Congratulations and thank you for purchasing a Harvest Tec model 700 Series Automatic Preservative Applicator system. Read this manual carefully to ensure correct steps are followed to attach the applicator to the baler. This applicator is designed to apply Harvest Tec buffered propionic acid. **Use of alternative products may cause system complications and voids the Harvest Tec manufacturer's warranty.** Complications may include inaccurate readings from the flow meter and damage to system components.

Harvest Tec applicators can be installed on many baler models when using the proper tank model number and installation kit. Before installing on your baler, make sure you have the proper model & installation kit. Please contact your local authorized dealer or Harvest Tec directly for specifications if you are unsure about the correct installation kit for your baler model.

Left and Right sides are determined by facing in the direction of forward travel.

Model Kit Reference – Small Square Balers *(Non-Double Baler/High-Capacity Models)*

Baler Make	Baler Model	Model Number	Installation Kit	Tank Size
AGCO	7105, 7110, 7115, 7120, 1835, 1837, 1837, 1841	744	4416C	55 Gallon
Case IH	8500 Series	744	4416C	55 Gallon
	SBX 520, 521	745	4409C	25 Gallon
	SBX 530, 540, 550, SB531, SB541, SB551	745	4415C	25 Gallon
	SBX 530, 540, 550, SB531, SB541, SB551	751	4415C	55 Gallon
Challenger	SB 34, 36, 44	744	4416C	55 Gallon
Freeman	270, 370	750	4506C	55 Gallon
Hesston	4550, 4570, 4590, 4600, 4655	744	4416C	55 Gallon
	4690N, 4690S	750	4502C	55 Gallon
John Deere	328, 336, 338, 346, 347, 348	745	4410C	25 Gallon
Massey Ferguson	1835, 1836, 1837, 1838, 1839, 1840, 1841, 1842, 1842S (Top Mount)	744	4416C	55 Gallon
	1835, 1836, 1837, 1838, 1839, 1840, 1841, 1842, 1842S (Side Mount)	742M	4416C-SO	25 Gallon
	1835, 1836, 1837, 1838, 1839, 1840, 1841, 1842 (Side Mount)	744	4417C	55 Gallon
	1842S (Side Mount)	744	4418C	55 Gallon
	1843N, 1843S	750	4502C	55 Gallon
	1844N, 1844S	750	4485C	55 Gallon
New Holland	200, 300 Series, 565 & BC5050	745	4409C	25 Gallon
	570, 575, 580, BC5060, BC5070, BC5080	745	4415C	25 Gallon
	570, 575, 580, BC5060, BC5070, BC5080	751	4415C	55 Gallon
	585, BB900	750	4507C	55 Gallon
New Idea	7205, 7210, 7215	744	4416C	55 Gallon
Welger	AP630, AP730, AP830	745	4412C	25 Gallon

Tools Needed

Standard wrench and socket set
Hose cutter
Metal drilling and cutting tools
Straight edge
Standard screwdriver set
Crescent wrench
Tape measure
1-1/2" hole saw (4415C only)
Side cutter
Hammer
Center punch

Tank Saddle Kit (030-044225-TK)
742M or 442M Applicator Kits

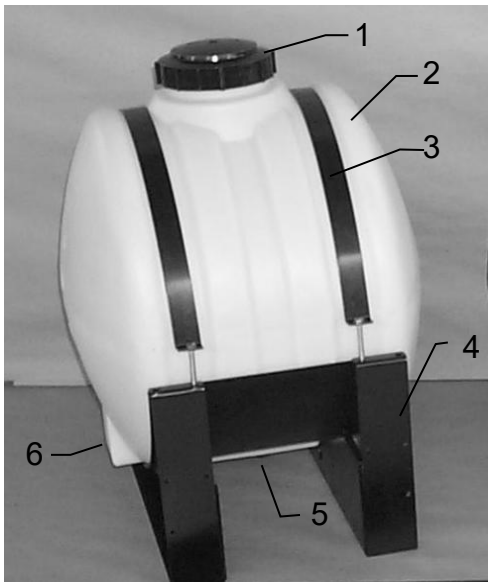

Ref	Description	Part #	Qty
1	Tank Cap	005-9022C	1
	Tank Cap Gasket	005-9022CG	1
	Tank Cap Breather	005-9022B5	1
2	Replacement Tank*	005-9022	1
	*Includes Bottom Fitting Only		
3	Tank Strap	001-4402	2
4	Tank Saddle	001-4442	1
5	Tank Fitting	005-9100	1
6	Plug for Side Fitting	003-F34	1
NP	Side Mount Brackets	001-4442SM	2
1-5	**Tank Saddle Kit**	**030-044225-TK**	

Tank Mounting
Model 742M or 442M – Tank Saddle Kit (030-044225-TK)
Using Side Mount Brackets (001-4442SM)

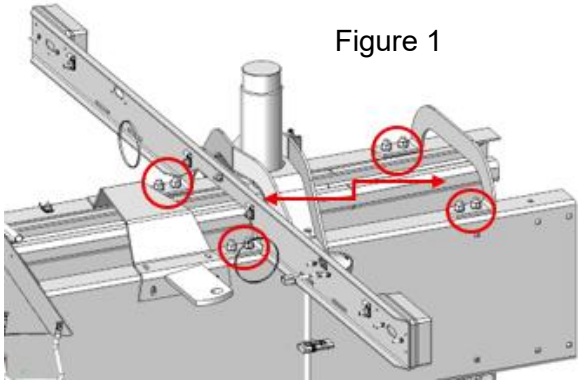

Figure 1

Light Rack Relocation
If baler is equipped with the rear light rack, it will need to be relocated to the rear mounting location on the bale chamber. Unbolt the bolts securing the entire light mounting bracket to the bale chamber and reinstall at the rearward set of factory holes on the bale chamber (Figure 1).

Side Mount Brackets (001-4442SM)
Side Mount Brackets (001-4442SM) will be mounted under the bale chamber with approx. 20” protruding out the RH side of the bale chamber to allow for tank and pump plate mounting (Figure 2).

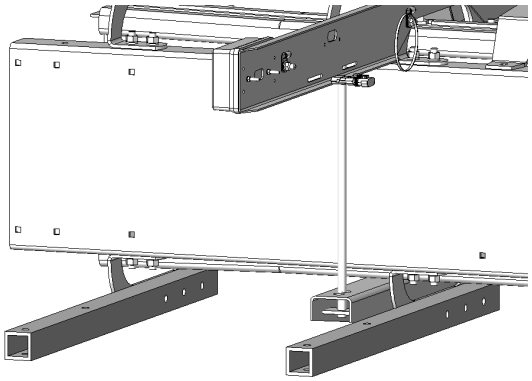

Figure 2

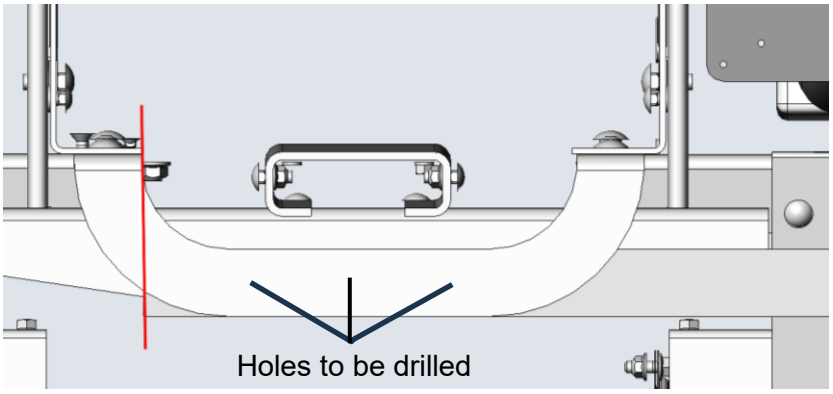

Figure 3

Using side mount brackets as the template, align the three holes to the front side of the U-shaped chamber support brackets, making sure the end of the bracket tubing is flush with the inside edge of the camber support bracket (Figure 3). Clamp brackets in place, then mark and drill the three 1/2" holes through chamber support. Attach mount brackets to chamber supports using six 3-1/2” x 1/2" bolts, washers and nuts.

Tank Saddle Mounting (030-044225-TK)

Mount the tank saddle (001-4442) to the side mount brackets (001-442SM) aligning the predrilled slots/holes (Figure 4) using four 3-1/2” x 1/2” bolts, washers, locks and nuts. Tank saddle may already have the tank mounted onto it. ***Note for 1842S balers:*** *New Holes will have to be drilled to attach tank saddle (001-4442) due to the narrower placement of the side mount brackets (001-4442) on this baler.*

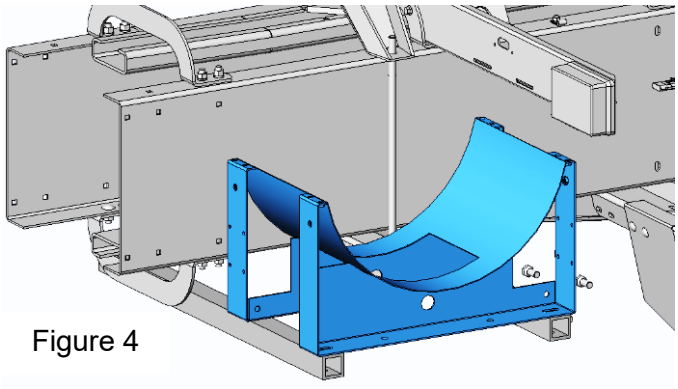

Figure 4

Loosen the tank straps and rotate the tank so the lid is as close to parallel as possible with the ground when baler is in field ready position (Figure 5).

Figure 5

Tank Saddle Kit (030-0432-TK)

744 or 434 Base Kits- Top Mounted Tank (4416C or 4416 Install Kits)

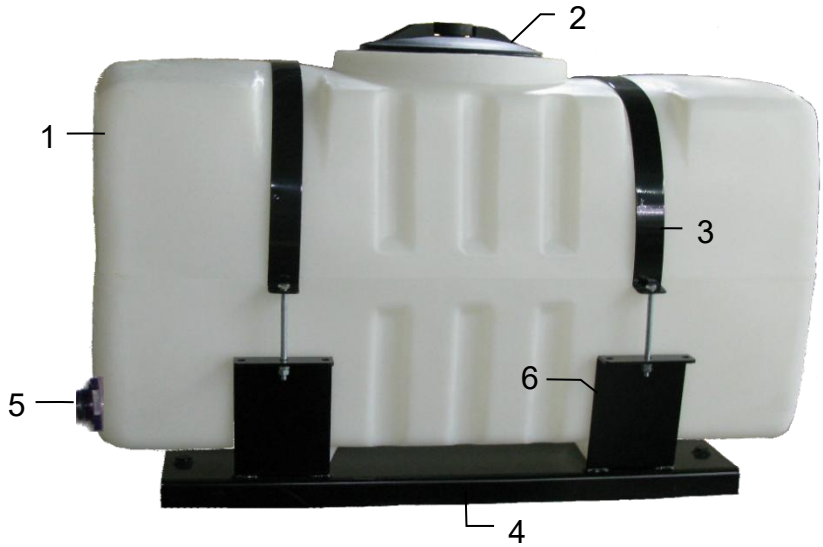

Ref#	Description	Part #	Qty
1	Tank	005-9203SQ	1
2	Tank lid	005-9022H	1
3	Tank straps	001-4402C	2
4	Tank Saddle	001-4703X	1

Ref#	Description	Part #	Qty
5	Tank fitting	005-9100	1
6	Strap Base	001-4703CC	4
7	Pump Plate Mount	001-4647	1

***Replacement tank for both mounting options**

Complete Replacement Tank*	**030-9203SQ**
Tank Saddle Kit (1-5)	**030-0432-TK**
Pump Mount Kit (7)	**PMP-4647MT**

Side Mounted Tank Option (4417C & 4418C or 4417 & 4418 Install Kits)

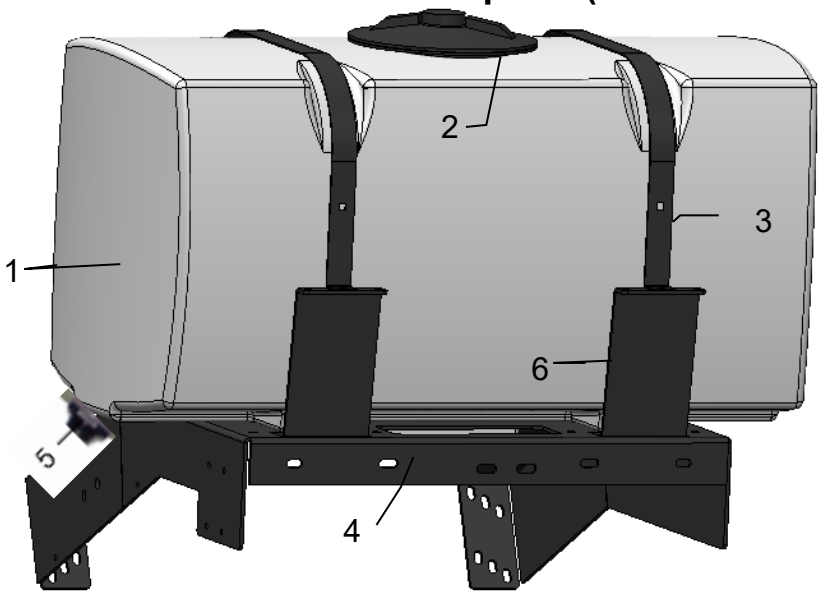

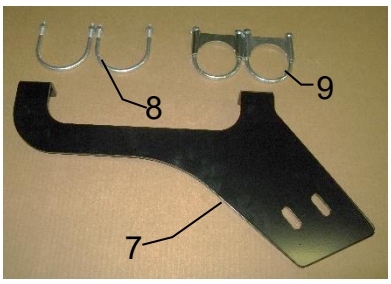

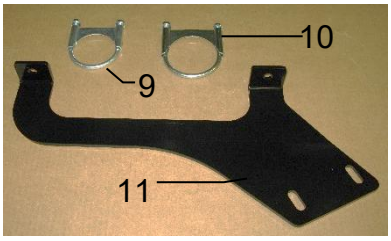

Ref#	Description	Part #	Qty
1	Tank	005-9203SQ	1
2	Tank Lid	005-9022H	1
3	Tank Straps	001-4402C	2
4	Tank Saddle	001-4703QS	1
5	Tank Fitting	005-9100	1
	Tank Plug	003-F34	1
6	Strap Base	001-4703CD	4

Ref#	Description	Part #	Qty
7	Support Bracket	001-4703QU	2
8	3-7/8” U-Bolt	001-4703QUX	2
9	2-7/8” U-Bolt	001-4703QUB	2
10	3-3/4” U-Bolt	001-4703QTB	2
11	Support Bracket	001-4703QT	2

4417C Tank Saddle Kit (1-9)	**030-0432SM-TK**
4418C Tank Saddle Kit (1-6, 9-11) Inc. Qty 1 of part #9	**030-0432SM-TK-18**

Tank Mounting

Model 744 or 434 - Top Mounted Tank Option
Install Kit 4416C or 4416 - Tank Saddle Kit (030-0432-TK)
Uses Tank Mounting Kit (TMK-4416)
Installation

Tank legs will be mounted to the back side of baler behind knotters and before the bale tensioner (Figure1).

Mark the two holes on each side of bale chamber that need to be drilled (Figure 2). Line up saddle legs on each side to verify holes before drilling (Figure 3). Drill all four holes to 1/2” (13mm) in size. Bolt legs to baler using supplied 1/2” x 1-3/4” Allen button head bolts, flat washers, lock washers, and nuts.
*Note: bolt head is on inside of bale chamber. Level top of leg before completely tightening bolts (Figure 4).

For Baler’s with Bale Thrower – Additional Bracket Required

When baler is equipped with a bale thrower, additional bracket (001-4703QC) will need to be used. First secure the kicker so it will not rotate when you remove the front pin on the hydraulic cylinder. Remove pin, install tank leg over mount. Reinstall pin. Bracket (001-4703QC) is a spacer that will go between the tank leg and side of the baler, to fill the space that the bale thrower’s front hydraulic mount adds.

Figure 1

Figure 2

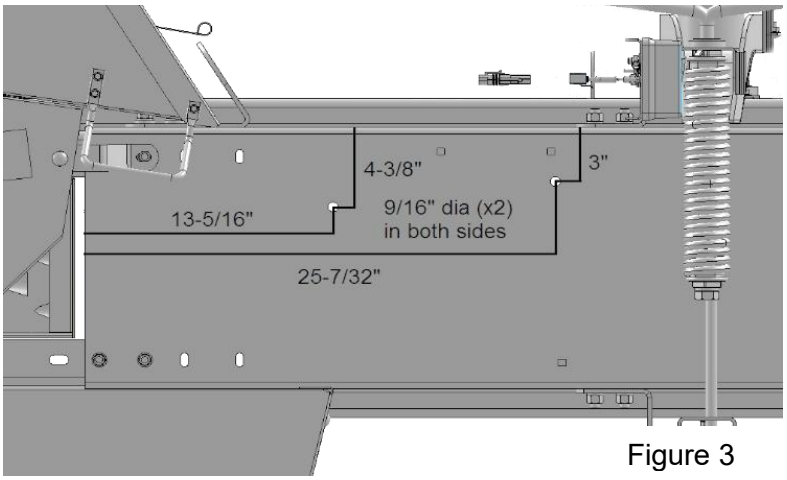

Figure 3

Figure 4

Tank and Tank Saddle - Installation

Mount tank saddle (001-4703X) onto tank legs as shown (Figure 5). Tank side fitting should be to the left side of the baler. Mounting bolts are pre-installed on tank saddle, secure with supplied 1/2” locks, washers, and nuts.

Figure 5

Tank Mounting

Model 744 or 434 - Side Mounted Tank Saddle Kit Option
Install Kit 4417C or 4417 (030-0432SM-TK)
Install Kit 4418C or 4418 (030-0432SM-TK-18)

Installation

1. Lay tank and frame assembly on ground on the right side of bale chute.
2. Locate “U” bolts that fit the baler’s hitch and install them around center hitch tube of baler. Hitch tube size may vary; kit includes two size options for U-Bolts. Attach to legs of tank frame. Do not fully tighten down nuts. **Note:** Tube hitch is not parallel to the ground so “U” bolts in tank support frame will need to be offset.
3. Rotate tank assembly up and check to see if saddle is parallel to ground. If not, adjust which holes the “U” bolts are installed into as needed to allow tank to be parallel.
4. You will need to drill 9/16” holes- See measurement reference chart below. Install rear mounts (001-4703QU or 001-4703QT for 1842S balers) just behind of “U” bracket on bottom of the bale chamber. Secure to baler with two ½” x 1 ¾” BHSC bolts, locks and nuts.
5. Slide tank and saddle frame loosely onto pipe to match up with front and rear mounts (001-4703QU or 001-4703QT). Install using two ½” x 1 ¼” bolts, flat washers, lock washers and nuts.
6. Recheck tank frame again that it is parallel to ground. Tighten down all bolts fully.
7. Attach pump plate assembly. Automatic systems mount pump plate to outside edge. Electronic and Manual systems have the pump mounted on rear of tank the saddle.

Rear Mount Measurement Reference Chart *as Measured from the END of the Underside of Bale Chamber	
4417C kits (uses the 001-4703QU brackets) Side to Side: 15.00” centered across bale chamber Front Holes: 40.94” from end of chamber Rear Holes: 13.00” from end of chamber	**4418C kits (uses the 001-4703QT brackets)** Side to Side: 15.00” centered across bale chamber Front Holes: 36.06” from end of chamber Rear Holes: 8.13” from end of chamber

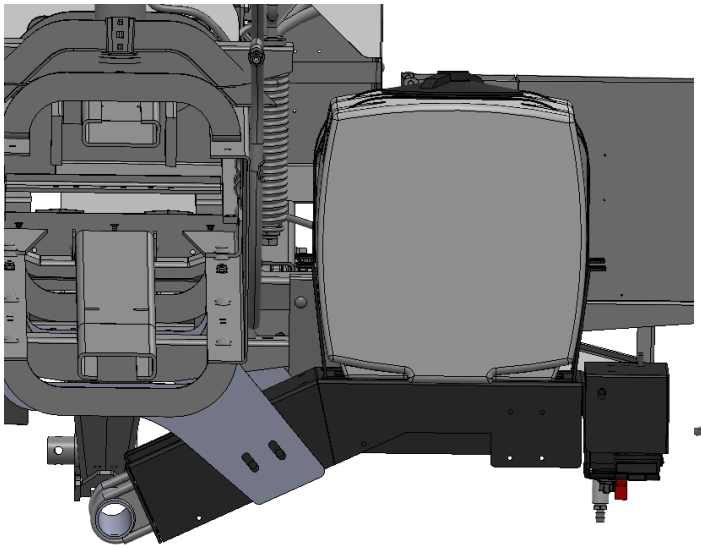

Tank Saddle Kit (030-0441-TK)
745 or 441 Base Kits

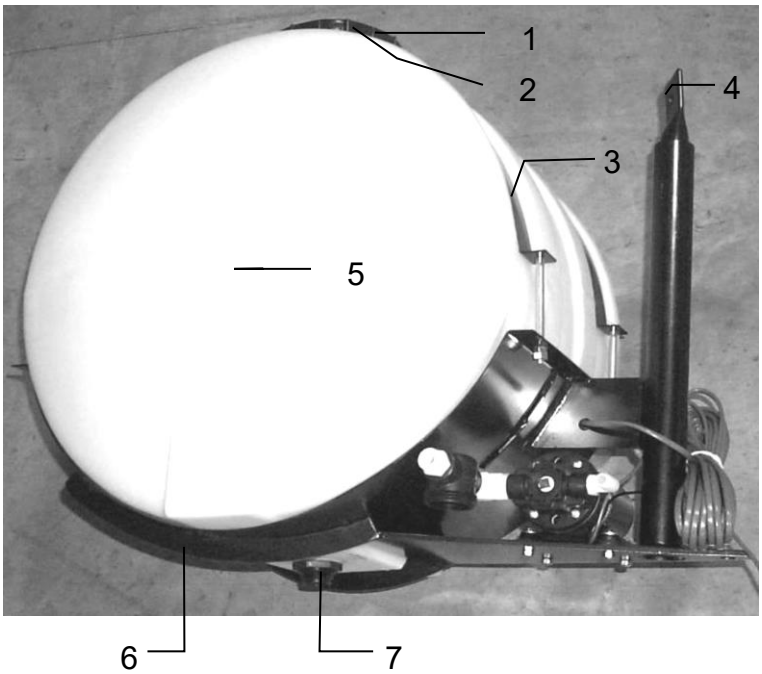

Ref	Description	Part #	Qty
1	Tank Cap	005-9022C	1
2	Tank Cap Gasket	005-9022CG	1
3	Tank Strap	001-4402	2
4	Stub Pipe	001-4403	1
5	Tank*	005-9022	1
6	Saddle	001-4401	1
7	Tank Fitting	005-9100	1
NP	Pump Plate Mounting Bracket	001-4647	1
1-7	**Tank Saddle Kit**	**030-0441-TK**	

*25-Gal Tank Includes Bottom Fitting Only

Tank Mounting
Model 745 or 441 – Tank Saddle Kit (030-0441-TK)
Uses Tank Mount Kit (TMK-4401)

Installation
The tank saddle assembly (030-0441-TK) mounts to the baler by sliding over Base Bracket (001-4406) from tank mount kit (TMK-4401). The base bracket is mounted to the baler's diagonal frame behind the twine box using u-bolts (001-4406A), similar to shown below. Secure the tank saddle assembly to stub pipe bracket by placing a 1/2" x 1 1/2" bolt through appropriate aligning holes of saddle tank and base brackets.

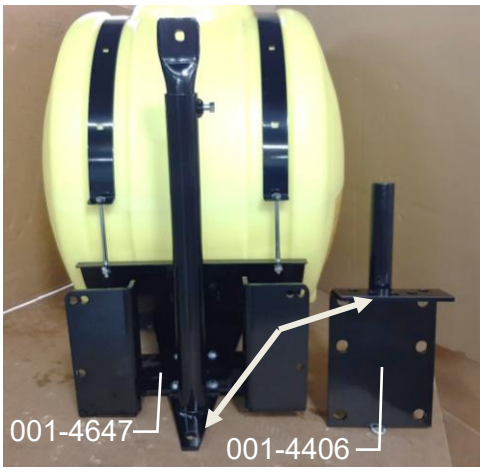

Telescoping Reach Rod- ***included in (TMK-4401)*** Bolt one end of the telescoping reach rod to the top stub pipe on the tank saddle and the other end to a secure location on the baler. Reach rods tabs may have to be bent to align properly. Once final length is determined, remove the set screw bolt and mark inner reach rod through the set screw bolt hole. Unbolt and remove inner reach rod - using a 3/8" bit, drill approximately 1/4" deep into the inner reach rod at your mark to create a stop for the set screw bolt to embed into. Reassemble the telescoping reach rod and tighten set screw bolt. Secure all tank saddle and reach rod hardware with nuts, washers and lock washers included with hardware.

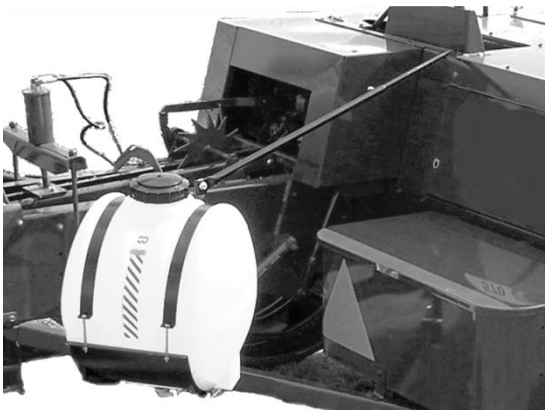

Example of installed Tank Saddle Kit using Tank Mount Kit

Tank Saddle Kit (030-0448-TK)
750 or 448 Base Kits

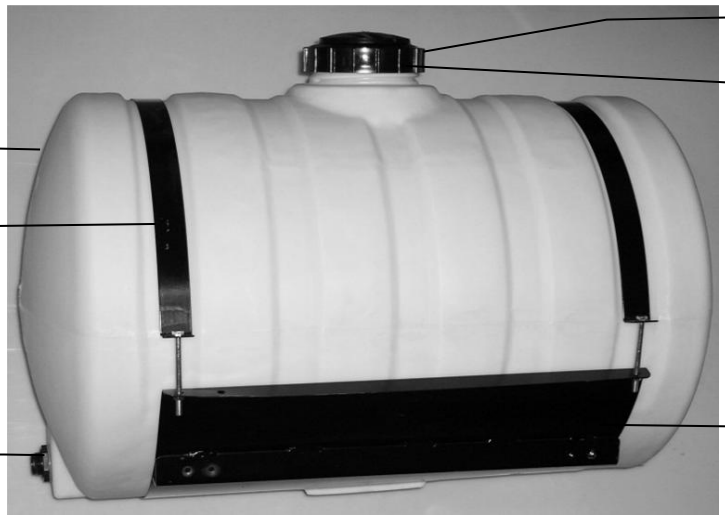

Ref#	Description	Part #	Qty	Ref#	Description	Part #	Qty
1	Tank*	005-9203	1	4	Tank Cap	002-9022C	1
2	Straps	001-4402	2	5	Tank Gasket	002-9022CG	1
3	Tank Fitting	005-9100	1	6	Saddle	001-4703	1

*55-Gal Tank Includes Side Tank Fitting Only

Complete Tank Saddle Kit **030-0448-TK**

Tank Mounting
Model 750 or 448 – Tank Saddle Kit (030-0448-TK)
Uses Tank Mount Kit (TMK-4485)

Installation Locate parts bag 7. Attach Tank Legs (001-4703B) to Tank Saddle (001-4703) using 3/8” x 1” bolts, flat and lock washers. Tank legs will attach on top of the bale chamber in front of the hydraulic compression area (Figures 1 & 2). Four 1/2” (13 mm) holes must be drilled on top of the chamber to mount the tank and frame. Clamp legs on top of the bale chamber to mark and drill holes. Use 1/2" x 1-3/4” allen head carriage bolts and flat washers, inserted through the bale chamber so that the carriage head and washer are inside the chamber. Secure tank legs using the allen head carriage bolts, 1/2" nuts, flat and lock washers. Support Brackets (001-4424C) mount to bale chamber using similar method and attach to tank saddle, for two-tie models only (Figure 3).

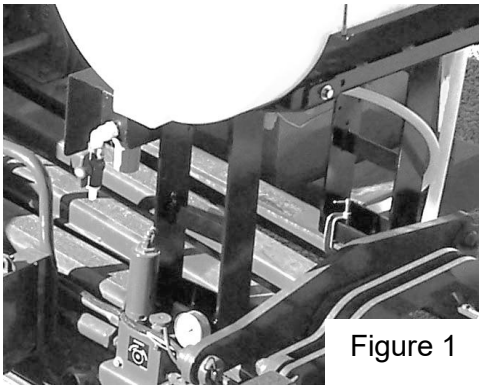
Figure 1

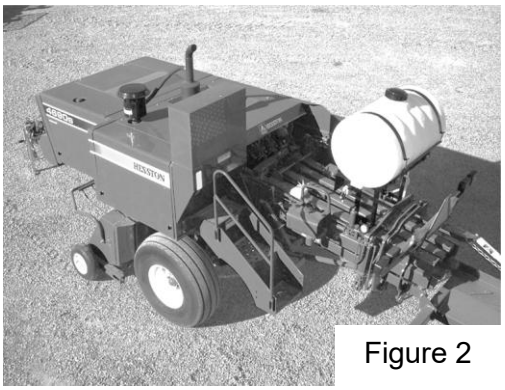
Figure 2

Figure 3

Tank Saddle Kit (030-0440-TK)
751 or 440 Base Kits

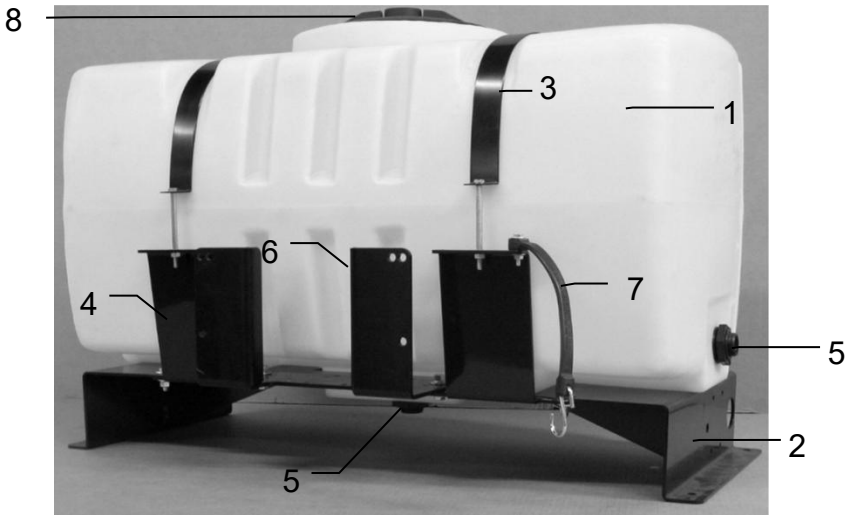

Ref#	Description	Part #	Qty	Ref#	Description	Part #	Qty
1	Tank*	005-9203SQ	1	6	Mounting Bracket	001-4647	1
2	Tank Saddle	001-4703C	1	7	Door Latch	001-4703CL	1
3	Sq. Tank Strap	001-4402C	2	8	Tank Lid	005-9022H	1
4	Short Strap Base	001-4703CC	2	NP	Long Strap Base	001-4703CD	2
5	Tank Fitting	005-9100	2				

*Tank Includes Cap, Bottom & Side Tank Fitting

Complete Saddle Kit (1-5,7-NP) **030-0440-TK**
Pump Plate Mount Kit (6) **PMP-4647MT**

Tank Mounting

Model 751 or 440 – Tank Saddle Kit (030-0440-TK)

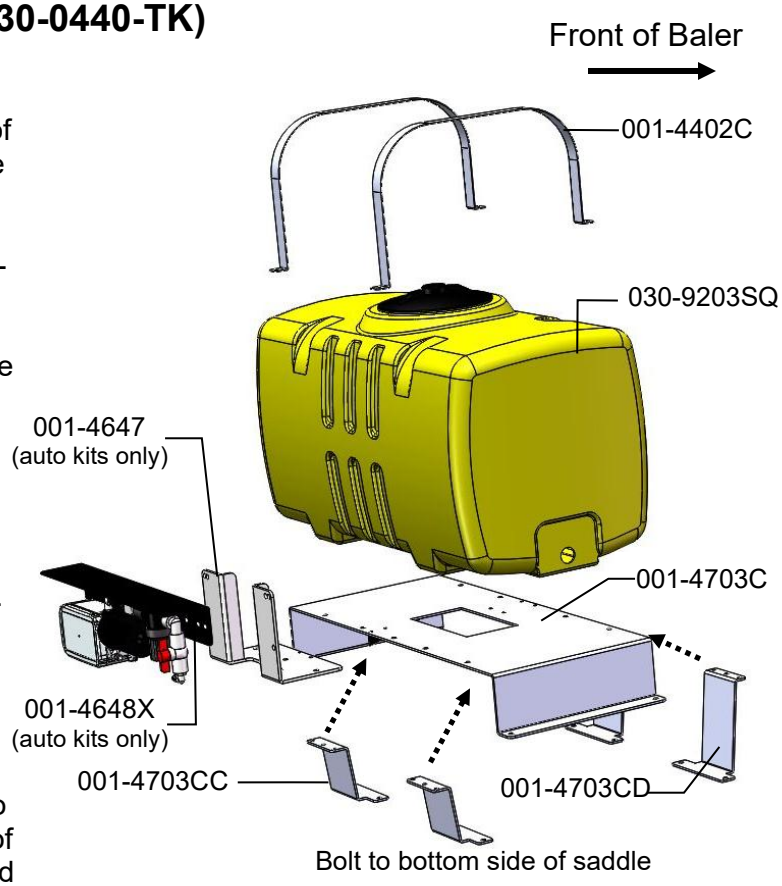

Installation Locate parts bag 12. Mount the two long strap bases (001-4703CD) to the bottom side of the saddle (001-4703C) front edge. Note: This is the side that has a 2" (5 cm) diameter hole in one of the sides. Use four 3/8" x 1-1/4" bolts, washers, locks, and nuts to secure. Mount the two short bases (001-4703CC) to the bottom side of the saddle's back edge. Use 3/8" x 1-1/4" bolts on the outside holes. Leave the inside holes open for the installation of the pump plate mount.

For automatic model 751: Install the "U" shaped pump plate mount (001-4647) to the top and back edge of the saddle. Secure with two 3/8" x 1-1/2" bolts on the outside that also go through the short mounting bases as listed above. Place one 3/8" x 1-1/4" bolt in the middle. Secure with washers, locks and nuts.

Install the tank fitting into the bottom of the tank (003-EL3412) and mount the tank on top of the saddle and between the strap bases. Locate the two straps (001-4402). Position the straps over the top of the tank and secure with four 5/16" x 4-1/2" bolts and eight nuts. All of the strap bolts need to have double nuts.

Mount the tank as shown below on the right side of the baler. The side tank fitting will be facing the right side of the baler. The pump plate assembly will be at the back of the baler. Place the tank on top of the baler and open the front access door (Figure 1).

Position the tank so that the front access door can be lifted open and locked in place. Line up the side of the tank saddle closest to the plunger with the bolts on top of the hood. Remove the two bolts, line saddle up with existing holes, and secure with new M8 x 30 bolts, flat washers, and locks. Mark and drill two 3/8" (10mm) holes on the top of the baler for the other open holes in the saddle to attach, secure with two 8mm x 30mm bolts, locks, flats, and nuts. The back access door will be held open with one door strap latch. The second door strap latch included with the kit can be used to hold twine box door if needed. Attach door strap latches to an appropriate open hole on the tank saddle or strap base with supplied bolts and hardware.

Before drilling, verify that the hole placement will not interfere with any baler operation.

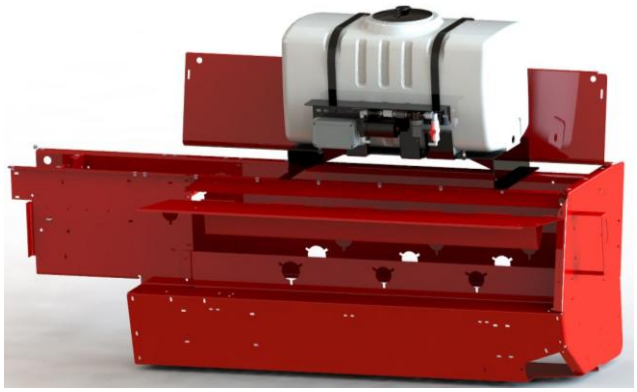

<u>Drain Fill Line Kit</u> (030-0493DFK)

Model 744 or 434 - Top Mounted Tanks

Using Parts Bag 1 and 3/4" hose. Locate the pre-drilled hole at the front of the bale chamber (Fig. 1). Secure valve assembly to baler using 5/16” x 3/4” carriage bolts (Fig. 2). Thread 3/4” (19mm) elbow fitting into tank, cut hose to correct length and connect to valve assembly. Secure with hose clamps on both ends (Fig. 3).

Side Mounted Tanks – Optional add on (not included with applicator kit)

Tank comes with a plug in the side tank. See general instructions below (for Model 750) if adding the drain fill line to applicator tank (Fig. 4).

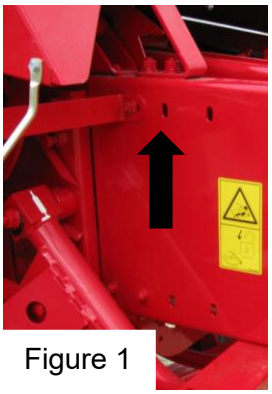

Figure 1

Figure 2

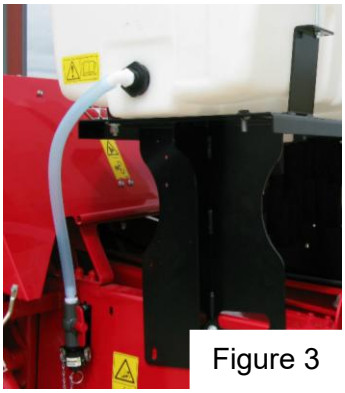

Figure 3

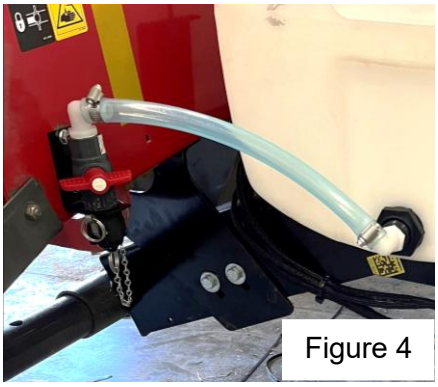

Figure 4

Model 750 or 448

Locate parts bag 1. Install the straight fitting (003-A3434) or elbow fitting (003-EL3434) into the side fitting in the tank. Drill two 5/16” (8mm) holes using the valve holder (001-6702H) as a template on the right side of the baler in a suitable location. Mount the valve holder with two 5/16” x 1” self-tapping bolts and flange nuts. Attach the 3/4” (19mm) cam coupler to the 3/4” (19mm) ball valve through the valve holder. Insert the straight fitting (003-A3434) into the ball valve. Cut the 3/4” (19mm) hose to length secure on both sides using hose clamps. Install supplied safety decals (DCL-8001 & DCL-8005) next to the ball valve assembly.

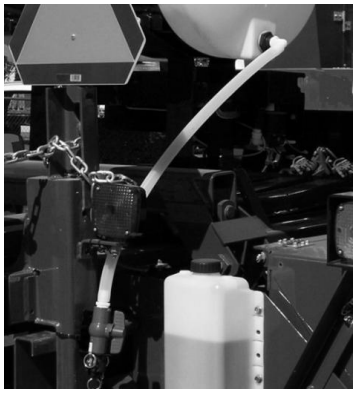

Model 751 or 440

Locate parts bag 1. Thread 3/4" (19mm) elbow fitting into end of tank (003-EL3434). Run 3/4" (19mm) hose from the elbow down the frame to the bottom of the baler. Drill 1/4" (7mm) holes to accept the valve holder bracket and use 5/16” x1” self-tapping screws and flange nuts. Connect valve assembly to other end of hose. Place hose clamps on both ends. Secure hose to frame using zip ties. Install supplied safety decals (DCL-8001 & DCL-8005) next to the ball valve assembly.

Parts Bag Packages and Hoses

PBA-1

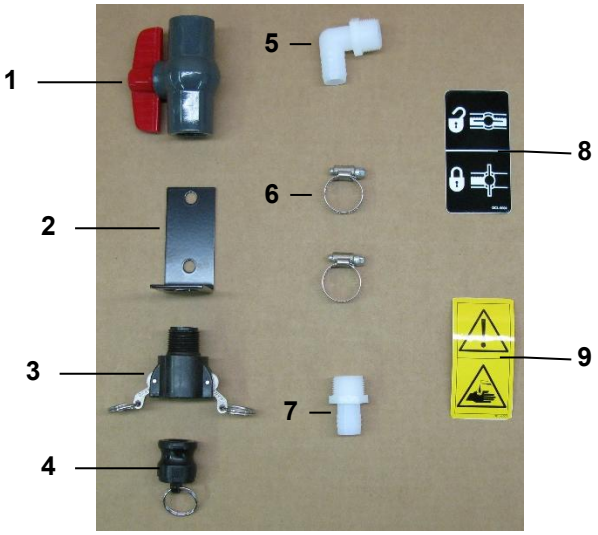

Ref	Description	Part #	Qty
1	3/4" Ball Valve	002-2200	1
2	Valve Holder	001-6702H	1
3	Female Coupler	002-2204A	1
4	Male Shut-Off Plug	002-2205G	1
5	3/4” x 3/4" Elbow	003-EL3434	1
6	#10 Hose Clamp	003-9004	2
7	3/4" x 3/4" Straight Fitting	003-A3434	1

Complete Drain Fill Kit **030-0493DFK**
(Includes 3/4" Hose Not Pictured)

PBP-16

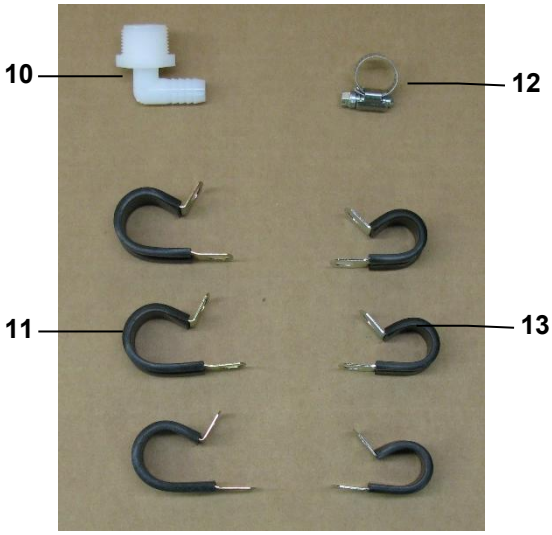

Ref	Description	Part #	Qty
8	Valve Decal	DCL-8004	1
9	Hazard Decal	DCL-8001	1
10	3/4" x 1/2" Elbow	003-EL3412	1
11	3/4" Jiffy Clip	008-9010	3
12	#6 Hose Clamp	003-9003	1
13	Small Jiffy Clip	008-9009	3

PBP-12

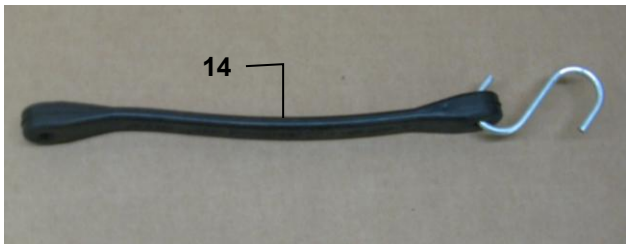

Ref	Description	Part #	Qty
14	Door Latch	001-4703CL	1

PBP-17

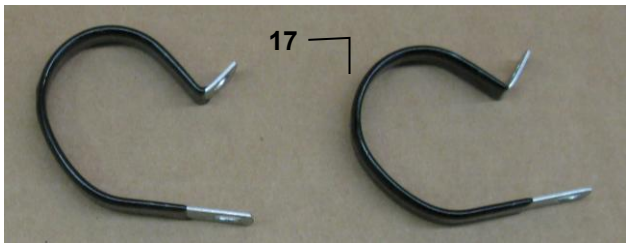

Ref	Description	Part #	Qty
17	Vinyl Clamp	008-9013	2

Hoses

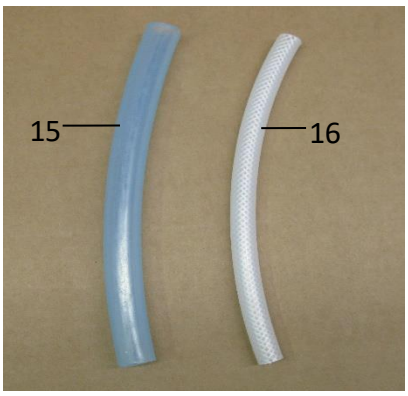

Ref	Description	Part #	Qty
15	1/2” Hose (Tank to Solenoid)	002-9001	15ft
16	1/4" Hose (Solenoid to Tips)	002-9016	6ft
NP	3/4" Hose (Drain / Fill Line)	002-9002	10ft

Parts Breakdown for Pump Assembly

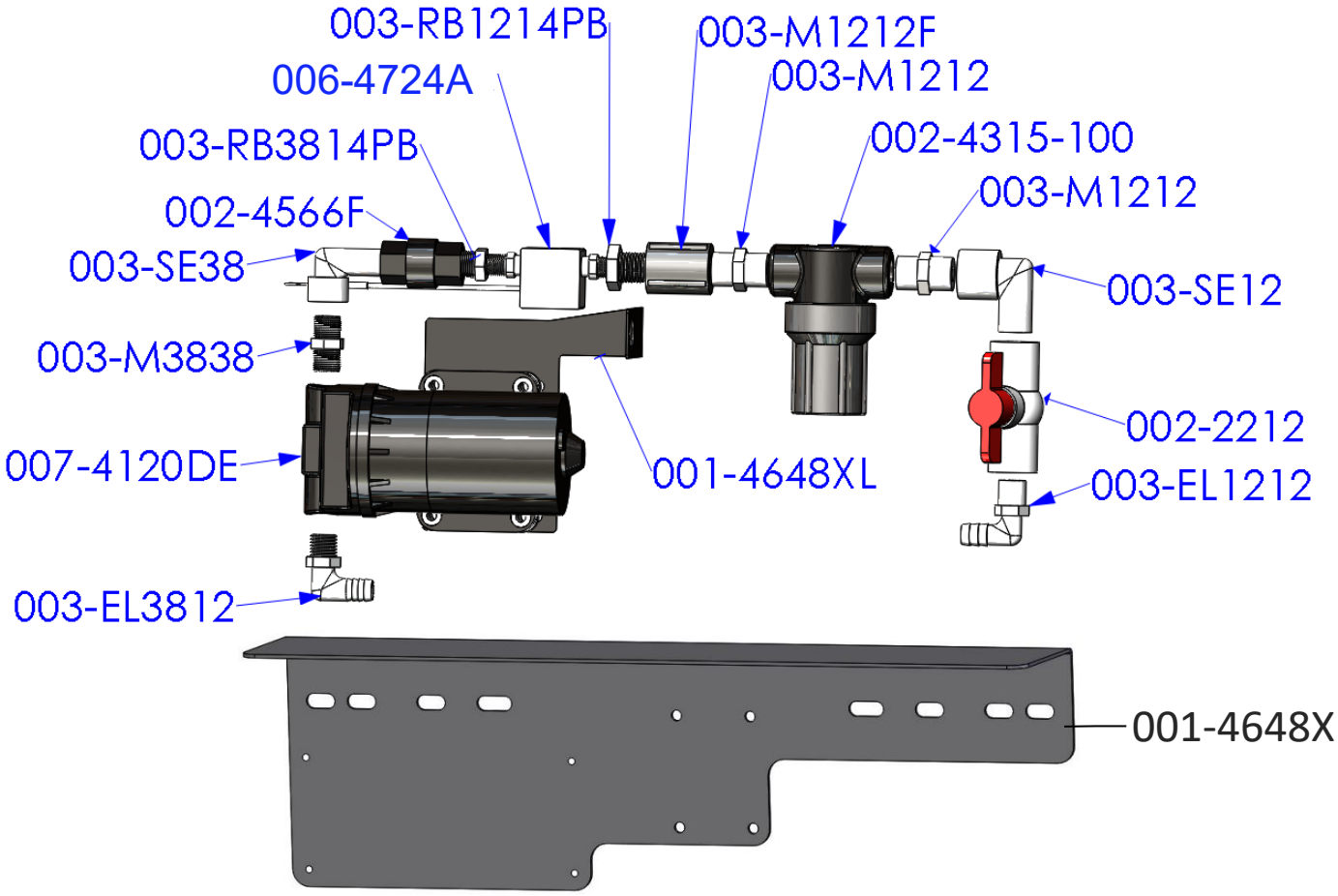

Part#	Description	Qty	Part#	Description	Qty
003-EL3812	3/8”MPT X 1/2"HB Elbow	1	003-M1212	1/2" Union	2
007-4120DE	300 Series Pump	1	002-4315-100	1/2" Line Strainer-100 Mesh	1
003-M3838	3/8” x 3/8” Union	1	003-SE12	1/2" Street Elbow	1
003-SE38	3/8” Street Elbow	1	002-2212	1/2" Ball Valve	1
002-4566F	3/8” Check Valve	1	003-EL1212	1/2"MPT x 1/2"HB	1
003-RB3814PB	RB 3/8” x 1/4” Reducer	1	001-4648XL	300 Pump Support	1
006-4724A	Flow Meter-Deutsch Plug	1	001-4648X	Pump Plate Mount	1
003-RB1214PB	RB 1/2" x 1/4" Reducer	1	003-A1212	Not Pictured	
003-M1212F	1/2" Coupler	1	003-A3812	Not Pictured	

Pump Assembly PMP-7636P (001-4648X Not Included)

Completed Assembly

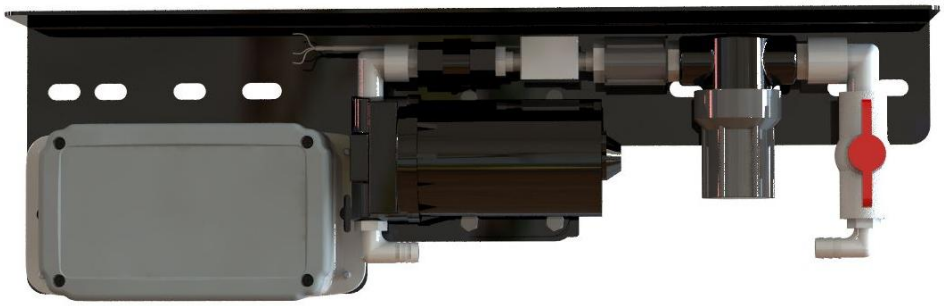

*Note: Due to alternative baler designs, elbow 003-EL3812 can be replaced by straight fitting 003-A3812. As well as elbow 003-EL1212 can be replaced by straight fitting 003-A1212. Both straight fittings are included.

<u>Pump Plate Assembly</u> (PMP-7636P)

Mounting ISO Pump Module (IPM) to Pump Plate

Locate the 700 Series ISO Pump Module (IPM) control (006-7671SS) from the controls package box. Also locate Pump Plate Assembly (PMP-7636P) and mount the IPM Control to the pump plate assembly using hardware included in the controls package box. The IPM control will mount directly onto the pump plate. The complete pump plate assembly, with IPM control attached, will then be mounted by one of the following methods based on applicator base kit model and/or installation kit:

IPM Control Box

Mounting Pump Plate Assembly to Tank Saddle

The pump plate assembly will attach to the tank saddle using the appropriate base kit model referenced below:
Note- Ensure to route harness downward out of the IPM to avoid water introduction to the control.

Model 742M

Mount the auto pump plate assembly (PMP-7636P) to the rear of the tank saddle (001-4442) using the existing tapped holes.

Model 744 - Top Mounted Tank Kit
Install Kit 4416C

Uses Pump Plate Mount Kit (PMP-4646MT)

Locate parts bag 8. Using two 3/8” x 1/4” bolts, locks, washers, and nuts. Mount the U-shaped Pump Plate Mount (001-4647) onto the tank saddle in the mounting holes located between the strap brackets on back of saddle (Figure 7).

001-4647

Connect the pump plate assembly (PMP-7636P) using two 3/8” x 1 1/4" bolts, nuts, locks, and flat washers to the mounting bracket (Figure 1, and Figure 2).

Figure 1

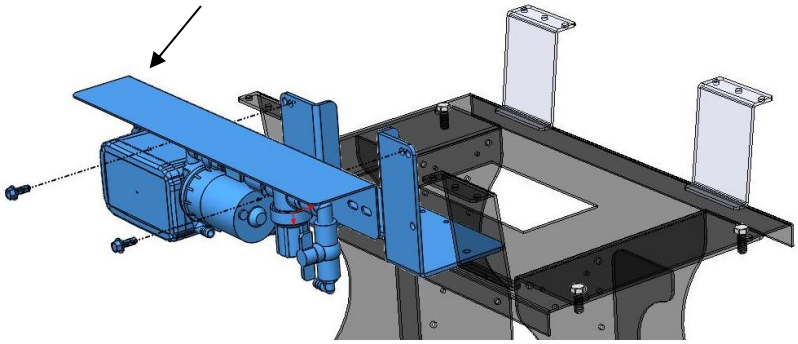
Figure 2

Mounting Pump Plate Assembly to Tank Saddle (continued)

Model 744 - Side Mounted Tank Kits
Install Kits 4417C and 4418C

Side Mount Tank Pump Manifold Assembly (PMP-7636P) will mount directly to the tank saddle as shown (Figure 3). Attach the pump plate assembly (PMP-7636P), using two 3/8” x 1 1/4" bolts, nuts, locks, and flat washers supplied hardware to the tank saddle (001-4703S).

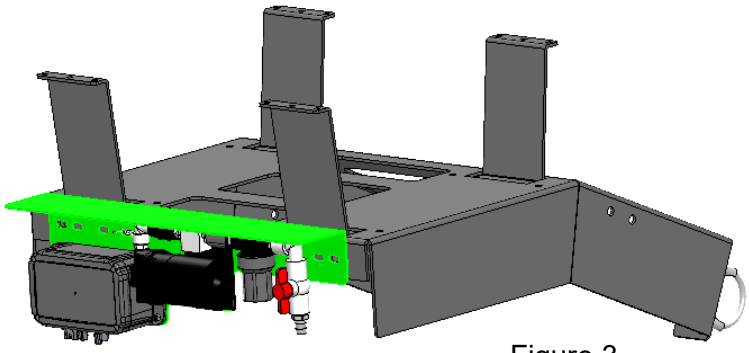

Figure 3

Model 745

Uses Pump Plate Mount Kit (PMP-4646MT)

Pump Plate Mounting Bracket (001-4647) comes attached to the tank assembly (Figure 4). Mount the IPM Control to the pump plate shield by using hardware included in the controls package box. The IPM Control box mounts on the pump plate as shown (Figure 5). Attach pump plate assembly to pump plate mounting bracket with hardware supplied within the pump plate box.

001-4647

Figure 4

Figure 5

Mounting Pump Plate Assembly to Tank Saddle (continued)

Model 750

Locate parts bag 8 and the mounting holes on tank legs (Figure 6). Mount the IPM Control to the pump plate shield by using hardware included in the controls package box. The IPM Control box mounts on the pump plate as shown (Figure 7). Secure the pump plate assembly (Figure 7) onto tank legs using two 3/8” x 1 1/4" bolts, nuts, locks, and flat washers.

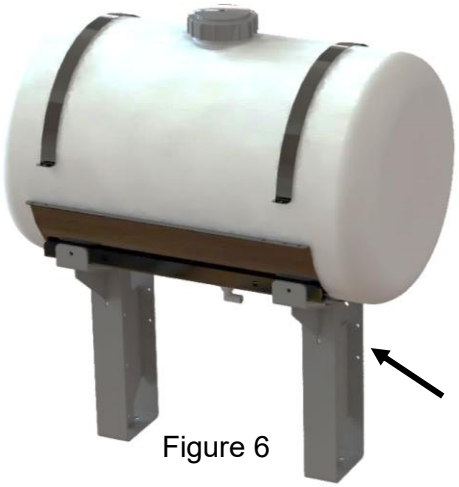

Figure 6

Figure 7

Model 751

Uses Pump Plate Mount Kit (PMP-4646MT)

Locate parts bag 8. Using two 3/8” x 1/4” bolts, locks, washers, and nuts. Mount the U-shaped Pump Plate Mount (001-4647) onto the tank saddle in the mounting holes located between the strap brackets on back of saddle.

Attach the pump plate assembly (PMP-7636P) using two 3/8” x 1 1/4" bolts, nuts, locks, and flat washers to the mounting bracket (Figure 8).

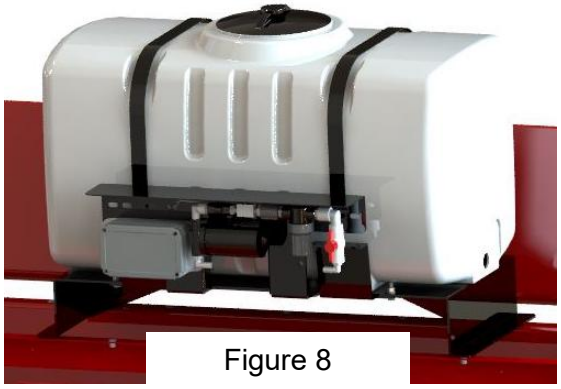

Figure 8

Main Controls and Wiring Harnesses

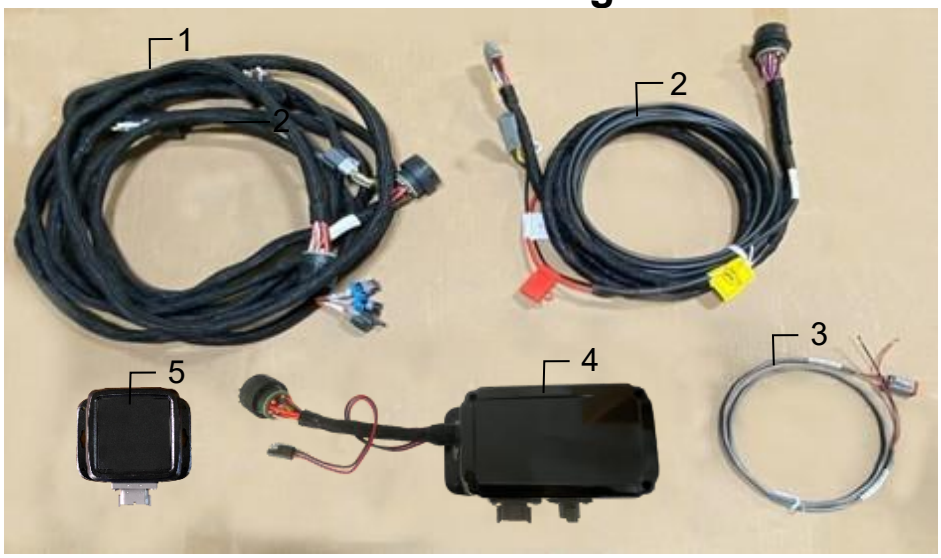

Ref	Description	Part#	Qty
1	Power Lead Baler 20’	006-762B	1
2	Power Lead Tractor	006-765IC	1
3	Key Switch Wire	006-765CPH	1
4	ISO Pump Module	006-7671SS	1
5	ISO Communication Module	006-6673	1

Ref	Description	Part#	Qty
NP	Terminating Resistor	006-700R*	1
NP	Dust Plug Kit	006-765DP	1
NP	Lightning to USB-A Cable	006-6672USBC	1
NP	Optional USB-C to USB-A Communication Cable	006-6672USBX	1

*006-700R installation on 006-762B harness is required at all times when operating the small square 700 series applicator

Main Harness Routing and Connections (006-762B)

Connect plug of the main baler harness (006-762B) to the ISO Pump Module (IPM) which is located on the pump plate near the tank. Route harness from the tank area forward towards the hitch. Be sure to avoid any moving parts and pinch points. Exact route of this harness is at the discretion of the installer. Secure harness to baler using cable ties.

Terminating Resistor (006-700R) must be attached to the CAN/IDM port on main baler harness (006-762B). This terminator is removed if Optional Moisture Dye Marker is added to the applicator system.

System sensor harnesses will connect to the designated connections labeled on the main baler harness.

Placement of Spray Nozzle Assembly

Install Kit 4409C or 4409

Spray Shield Assembly (Auto. Shield 030-4409C-SO)

1. Mount the left-hand nozzle strap (it has an elbow fitting and a silver tip) so that it is approximately 80% across the width of the pick-up head. Example: if the head is 60” wide, locate the nozzle 48” from the right side of the head (60”x 80”).
2. Mount the right-hand nozzle strap (it has a tee fitting and a silver tip) in the center of the pickup head.
3. Bend the nozzle bar in so that the tip is pointed in toward the bottom of the gathering chamber and about 16” above the sheet metal base of the chamber. Twist the nozzle so the tip is tilted 45 degrees from horizontal.
4. One 1/4” line will need to be run to the nozzle straps from the solenoid (auto systems) or hose manifold (electronic).

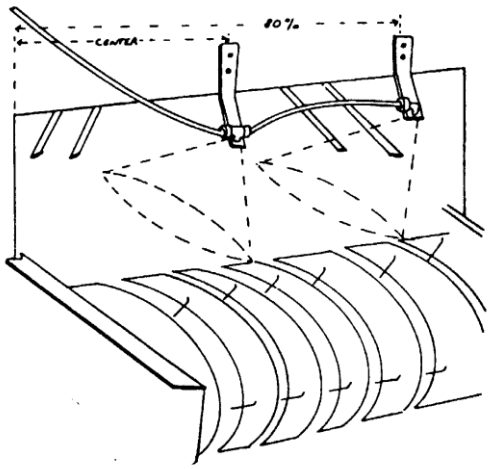

Install Kit 4410C or 4410

Spray Shield Assembly (Auto. Shield 030-4410C-SO) or (Elec. Shield 030-4410-SO)

Install Hoses before installation of shield. Bolt the shield assembly (Figure 1) up under the baler’s hood. Remove 3 bolts shown in Figure B (labeled A, B, C) on the baler and replace with hardware in kit to fasten lip securely in place. One 1/2" line will need to be run from the spray shield to the solenoid (auto systems) or hose manifold (electronic systems only).

Figure 1

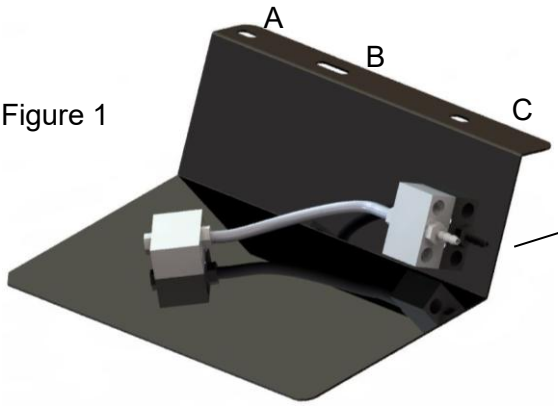

Figure 2

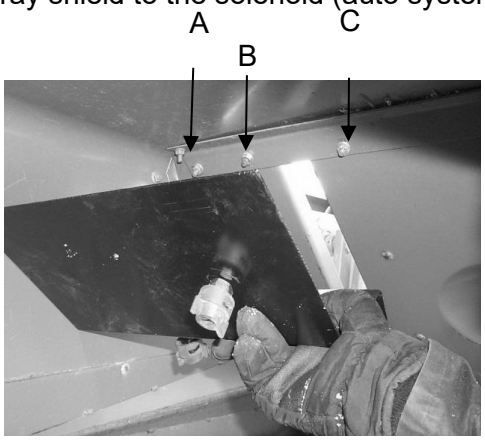

Install Kit 4412C or 4412

Spray Shield Assembly (Auto. Shield 030-4412C-SO)

Align the shield, with brackets attached, to the front sheet metal 10”-14” (25 – 36 cm) from the edge of the knife in the baler chamber. The spray pattern should be aimed towards the middle of the baler chamber. Verify the mounting location will not interfere with any baler functions. Mark and drill 4 holes with a 10 mm drill bit. Install the shield using 3/8” x 1-1/4" bolts, flat and lock washers, and nuts.

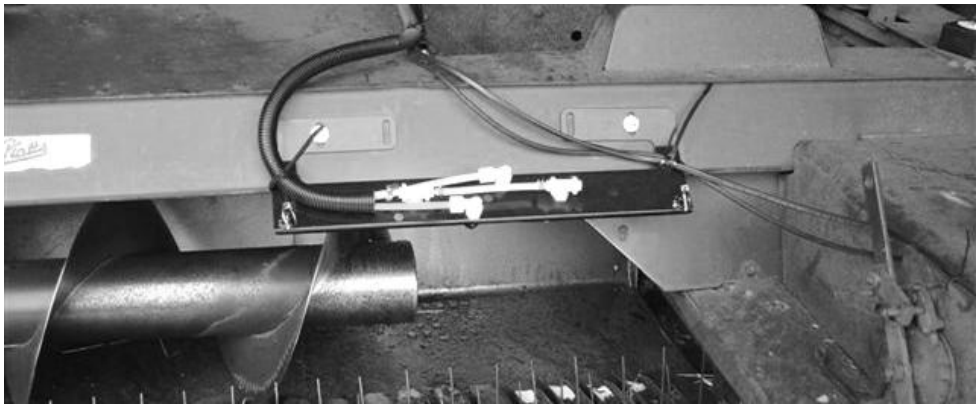

Install Kit 4415C or 4415

Spray Shield Assembly (Auto. Shield 030-4415C-SO) or (Elec. Shield 030-4415-SO)

Locate the hay guard directly above the bale chamber. This install can be done with the hay guard in the baler, but it is recommended removing it for ease of installation. Consult your dealer for guidance.

Installation of Spray Shield

1. Mark a point 9-1/4” (24cm) from the knife on the hay guard and draw a squared line across width.
2. Remove hay guard from baler if possible. Mark the top and bottom of the hay guard for the correct re-installation.
3. Back out plastic drill guides from the gray spray shield until they are flush with the bottom of the spray shield. Line up the spray shield on the hay guard with the KNIFE sticker against the line just marked.
4. Center and clamp the spray shield firmly in place.
5. Using a 1/2" (13mm) drill bit, mark the location of the two 1/2" (13mm) holes to create a center mark. DO NOT DRILL THROUGH STEEL.
6. Remove spray shield. On the holes just marked, use a 1/4” (7mm) drill bit and drill through both pieces of steel as square as possible.
7. Insert two 1/4" x 2” button head cap screws through holes in the bottom of the hay guard. The head of the screw will need to be down (in the chamber). Secure with nylon lock nut on top side.
8. Replace spray shield and secure with the hold-down knobs.
9. Drill out the two holes with drill guides installed with a 1/4” (7mm) drill bit. Drill through both pieces of steel.
10. Remove the spray shield and use a 1-1/2” (38mm) hole saw, drill the two holes through the TOP STEEL ONLY.
11. Drill out the bottom holes with a 9/16” (14mm) bit. Be careful not to oblong the holes. De-burr any metal filings left around the three holes on both sides of the hay guard. Use touch-up paint on bare surfaces to preserve the metal and the baler.
12. Remove plastic drill guides from the shield and thread the elbow completely into the spray shield.
13. Thread both elbows into the shield. Install the high output tips (004-1104-SS) onto the elbows by securing with nozzle caps (003-BC12).
14. Back the threaded fittings out as far as possible. Place the shield on the hay guard and secure by pressing down. Secure the spray shield with the hold-down knobs.
15. Thread both elbows down until they touch the bottom metal and align as needed for routing the hoses. NOTE: Tips should protrude slightly out of the bottom of the hay guard with no space between the tip and the hole.
16. Re-install hay guard onto the baler.
17. Align nozzle at 45 degree angle inside the chamber.

Installation of Hose and Support Bracket

1. If the hay guard was removed for shield installation reinstall at this time.
2. Mark a point 6” (15cm) from the first rotating tine on the center of the hay guard. Center punch this mark and drill a 1/4" (7mm) hole through both the top and bottom of the hay guard.
3. Bolt the bottom bracket (001-4425B) using 1/4" x 2” button head cap screw. Secure with a 1/4" flange nut. The head will need to be down (in the chamber).
4. Loosely install the remaining bracket (001-4425B) to the bottom bracket attaching in the middle. Level the two pieces and extend the top bracket until it reaches the top of the baler. Secure with a 1/4" flange bolt and nut.
5. Mark and drill the top hole with a 1/4" (7mm) bit. Secure with a 1/4" (7mm) flange bolt and nut.
6. Route the hoses from the pumps down the cross member of the tank is mounted on towards the right side tire. The hose will go up the right side of the baler towards to the top and center of the baler towards the hole that will be made in the next step.
7. Cut a 1-1/2" hole in the top of the baler for the hose to route through. Install the grommet once the hole is complete.
8. Install the hoses from the elbows on the shield, under the hay tine, to the bracket, and out the 1-1/2" hole in the hood of the baler. Cut hose to 10” outside the hole.
9. Secure hoses on the end of spray shield with two jiffy clips (008-9014) and 1/4" x 1/2" round head screw.

Install Kit 4415C or 4415 (continued)
Installation of Hose and Support Bracket (continued)

10. Secure the hose to the bracket with two jiffy clips (008-9014) and 1/4" flange bolts and nuts. Keep the hose in the center of the bracket.
11. Attach the Y fitting (003-Y1414) to the hoses leaving the hole in the hood of the baler. Cut 6” to go between single leg of Y fitting and pulsing solenoid.
12. Install the 1/2" hose from the pump to the straight 1/4" x 1/2" fitting (003-A1412) connected to solenoid.

View from behind the twine box with the inspection door open:

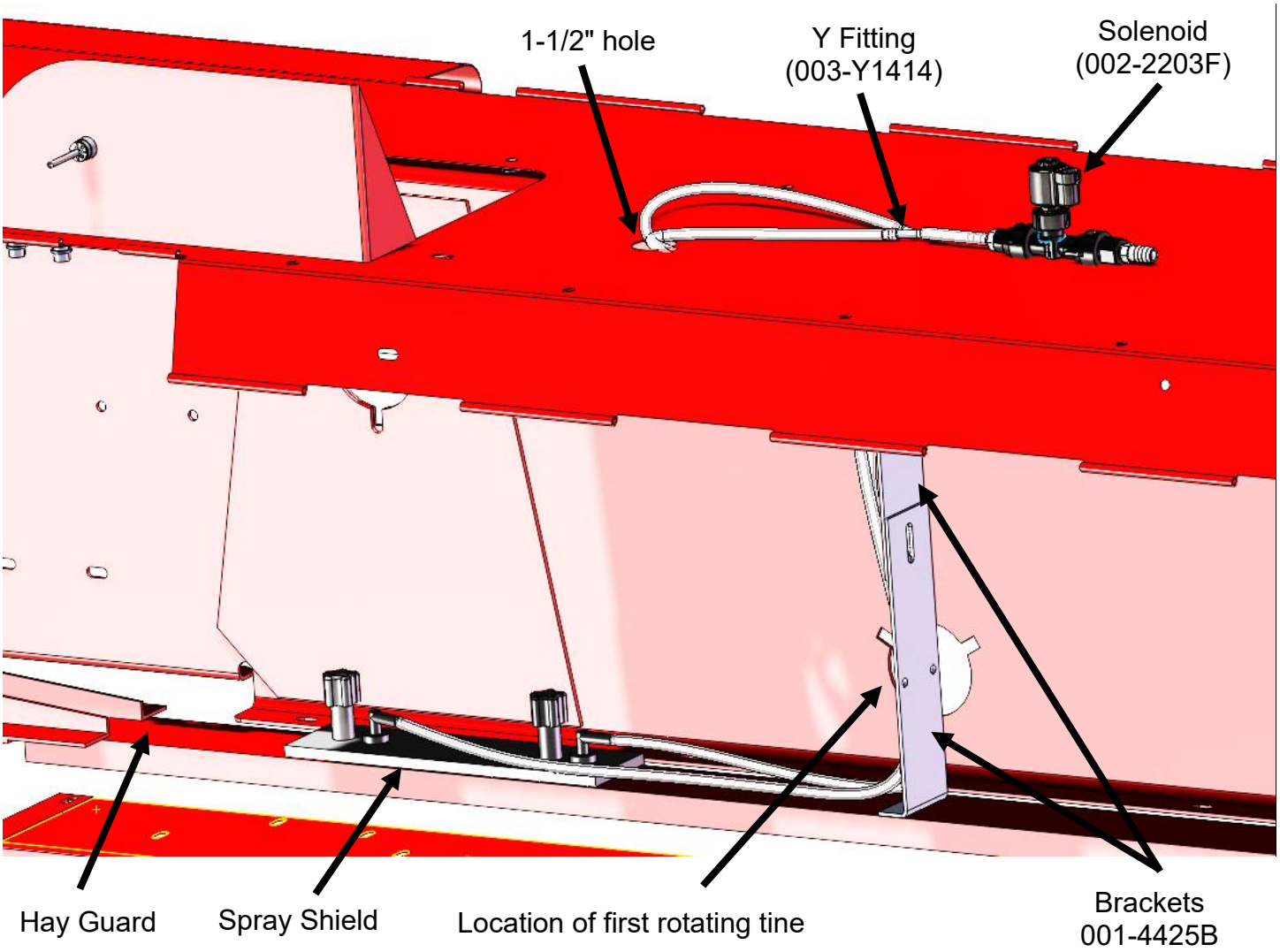

Install Kits 4416C, 4416C-SO, 4417C, 4418C & 4485C or
Install Kits 4416, 4416-SO, 4417, 4418 & 4485

Spray Shield Assembly (Auto Shield 030-4416C-SO) or (Elec. Shield 030-4416-SO)

On baler tongue above center of the baler, Shield Holders (001-4424B) will be installed on both sides of baler tongue using pre-drilled holes. Loosely attach shield holders to the Spray Shield (001-4424A2) using two 3/8" bolts, washers, lock and nuts. Loosely bolt the LH hanger bracket to the baler using the factory hole (**A**) and supplied 3/8" hardware. Loosely bolt the RH hanger to baler using the front factory hole on the RH side of the baler (**B**). Tighten hardware to secure hanger brackets to baler. If desired, drill and attach a second bolt for shield holder brackets (**C**). Center and adjust the angle of the spray shield assembly. Angle the spray shield toward back of pickup, between augers, to the area before crop enters bale chamber. Tighten all hardware.

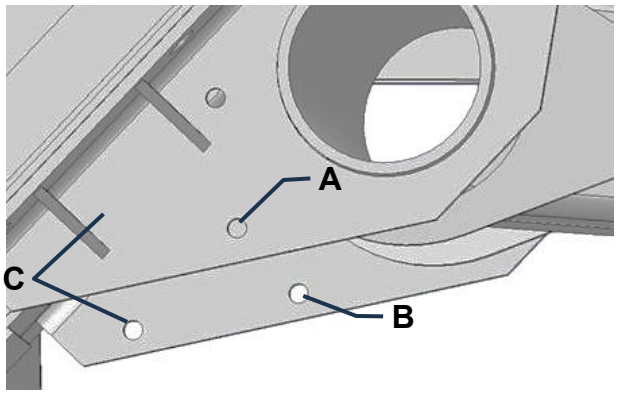

Install Kit 4502C or 4502

Spray Shield Assembly (Auto Shield 030-4502C-SO)

The shield for your baler will mount in the throat of the baler as shown. Remove nut and bolt on both sides of baler, as indicated. Install shield holders (001-4703I) with 1/2 x 2" bolts, nuts, locks and flat washers. Do not tighten these bolts until the shield is properly aimed. Aim the shield at bottom of the pickup head at the point where stuffer fingers connect with hay (between the two augers) and make sure the bushing is not removed. Once the shield is in place the nuts may be tightened down.

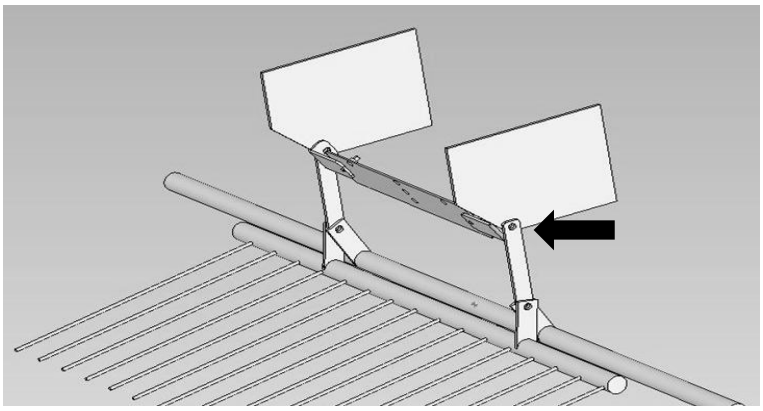

Install Kit 4506C or 4506

Spray Shield Assembly (Auto Shield 030-4506C-SO)

The shield for your baler will mount on top of the sheet metal directly above the pickup head shown in the picture below. Mount shield holder (001-4703H) on top of metal 6” (15cm) from the front of the baler and 10” (25cm) from the side of the baler. Attach this holder with 1/4 x 1 1/4" self-tapping bolts. Place shield of top of holder and rotate the shield to a 45-degree angle. Mark the location of the next holder’s position and install. Four holes will need to be drilled below the tips using a 3/4" (19mm) hole saw or bit.

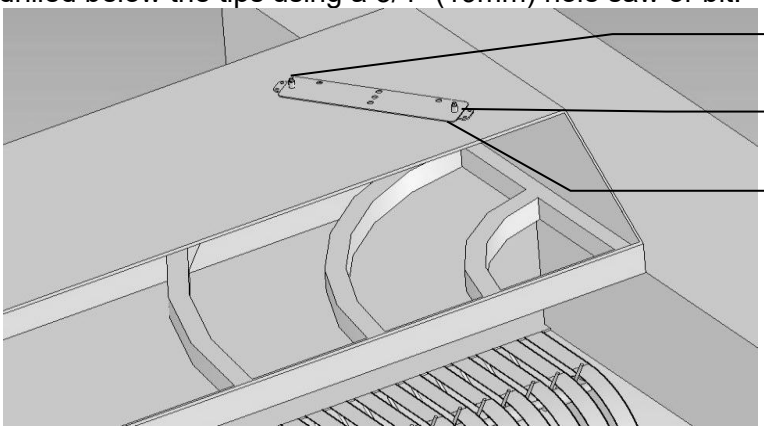

Install Kit 4507C or 4507

Spray Shield Assembly (Auto Shield 030-4507C-SO)

The shield for your baler will mount on the wrap guard as shown in the picture below. Remove the two outside bolts on each side of the wrapper guard. Place bracket 001-4703G so pins are facing up and bolt through with 3/8 x 1-1/2" into bracket 001-4703G, through wrap guard, and into threaded holes on baler frame that the bolts were removed from.

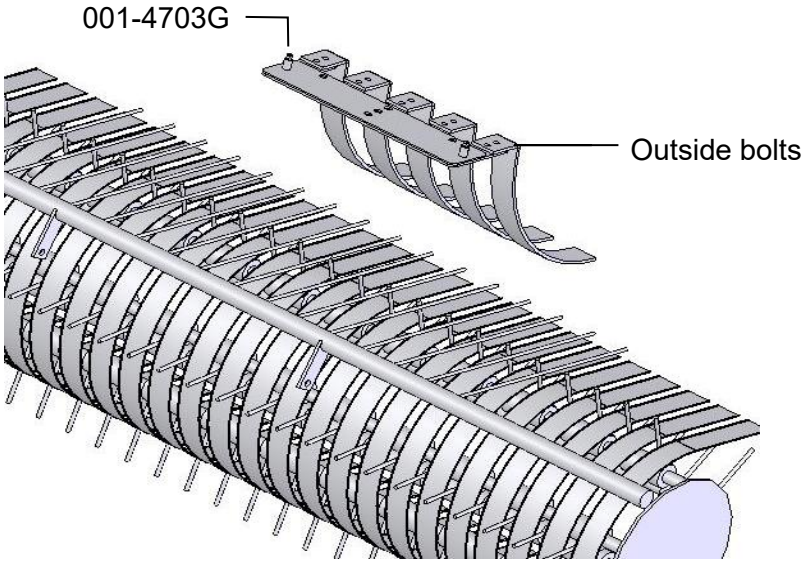

Plumbing Routing and Solenoid Placement

A. Intake

Locate parts bag 16. Use the 003-EL3412 on the bottom of the tank to route 1/2" line (002-9001) to the 003-A1212 or 003-EL1212 fitting used on the ball valve attached to the pump plate. Attach hose clamps (003-9003) on both of the fittings.

B. Discharge

Route the 1/2" hose from the pump output toward the front of the baler and connect to the Solenoid Assembly. Solenoid can be free-floating while connected to hoses. Secure the solenoid assembly and hose along baler, positioning the solenoid closer towards the spray tips- solenoid assembly is the transition point between the 1/2" tank supply line and the 1/4” hose of the spray shield assembly. Solenoid should be placed in an accessible location away from the incoming forage. Connect solenoid wire harness to solenoid and connect other end of harness to main baler harness plug labeled ‘SOL-1’.

700 Series Solenoid Packages - Small Square Balers

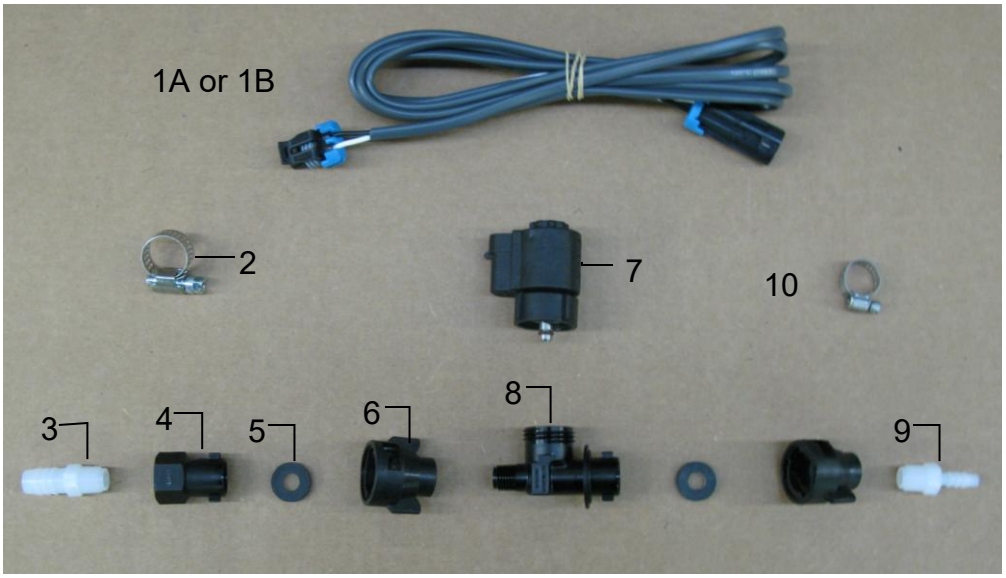

Solenoid Package A (for 751 Kit) and Solenoid Package B (for 744, 745, 750 Kits)

Ref	Description	Part #	Qty	Ref	Description	Part #	Qty
1A	Solenoid Harness (5')	006-3650-S1	1	6	1/4" Female Disconnect	004-1207H	2
1B	Solenoid Harness (10')	006-3650-S2	1	7	Solenoid	002-2203F	1
2	#6 Hose Clamp	003-9003	1	7	Solenoid Valve Body	004-1207VF	1
3	1/4"x1/2" Straight Fitting	003-A1412	1	8	1/4" x 1/4" Straight Fitting	003-A1414	1
4	1/4" Female Connector	004-1207G	1	9	Mini Hose Clamp	003-9002	1
5	Rubber Washer	004-1207W	2				

Complete Assembly Pkg. A	SOL-3SP-A
Complete Assembly Pkg. B	SOL-3SP-B

Expanded View of Pulsing Solenoid (002-2203F)

Replacement Pulsing Solenoid O-Ring Kit available (002-2203FG)
(Includes EPDM O-Rings 6, 8, 9 shown below)

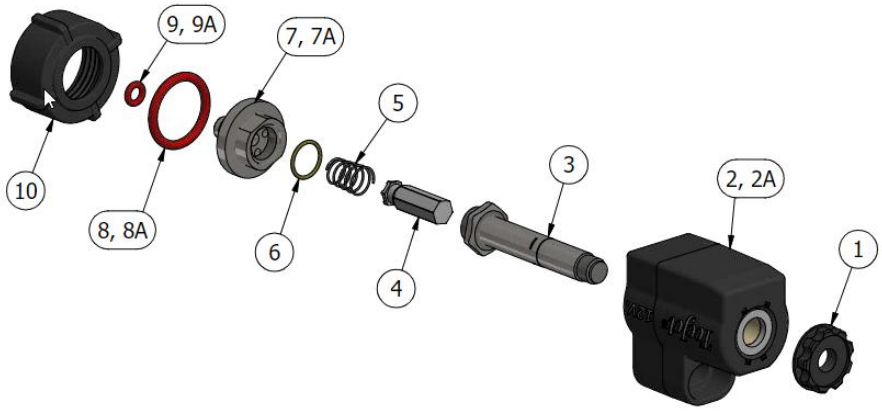

To clean solenoid valves:
The Center Section can be removed from Housing #2 by loosening #1 from #3. Once removed, use wrenches on components #3 and #7 and gently turn to loosen and separate. Soak parts #3-10 in warm soapy water, clean with a soft bristle brush, rinse with clean water to remove buildup before reassembly.

<u>End of Bale Sensor Kit</u> (EOB-7SS-A) or (EOB-7SS-B)

Installation

Mount the 006-7401 sensor to the mounting bracket, similar to as shown below (Figure 1). AGCO balers use EOB Sensor Bracket (001-4648SI), Case IH, New Holland, & John Deere and other balers use EOB Sensor Bracket (001-4648SS).

Mount the EOB sensor assembly on the right side of the baler chamber. The face of the sensor needs to be parallel to the arm attached to the needles (similar to Figure 2). Mount the sensor 5-8” from the pivot point, in a well-suited place, to reduce damage to the sensor by needle arm when returning to the home position. Mark and drill two 3/8” (10mm) holes. Install the sensor using two 5/16” x 1“allen head bolts, locks, and nuts. The end of the sensor needs to be no greater than 1/4” (7mm) away from the needle arm. Tighten nuts on sensor after adjustment.

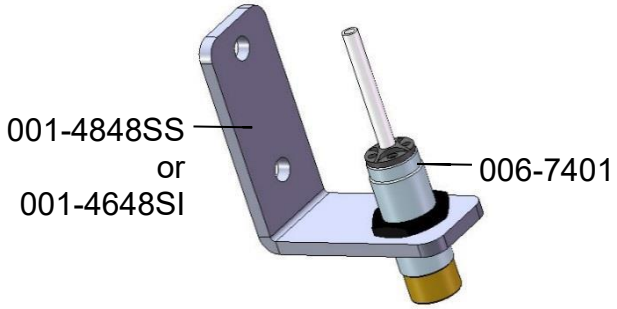

Figure 1

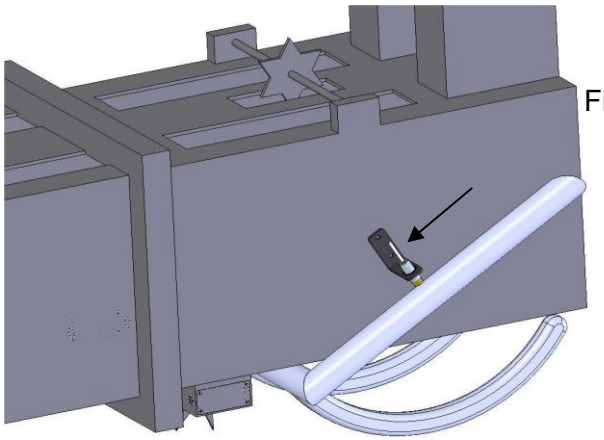

Figure 2

.

End of Bale Sensor Kit A

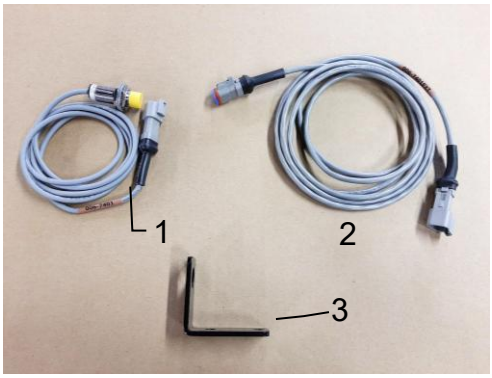

Ref	Description	Part #	Qty
1	End of Bale Sensor	006-7401	1
2	EOB Extension	006-7401EXT	1
3	End of Bale Bracket	001-4648SS	1

Complete Assembly (Ref. No. 1-3) **EOB-7SS-A**

End of Bale Sensor Kit B

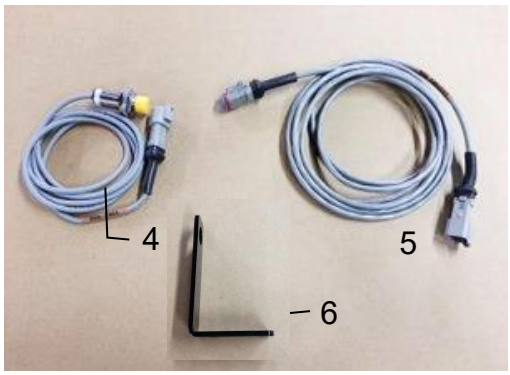

Ref	Description	Part #	Qty
4	End of Bale Sensor	006-7401	1
5	EOB Extension	006-7401EXT	1
6	End of Bale Bracket	001-4648SI	1

Complete Assembly (Ref. No. 4-6) **EOB-7SS-B**

Optional Stroke/Flake Counter Kit (030-0700SCK)

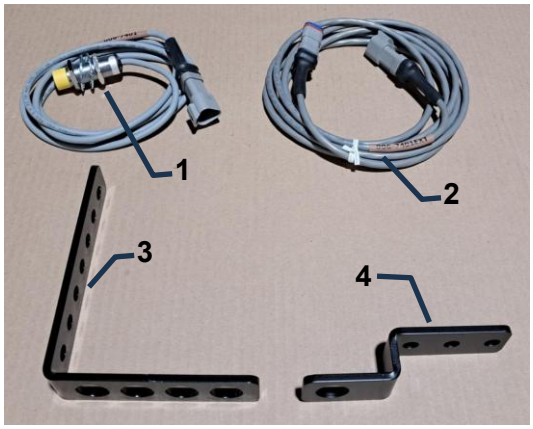

Ref	Description	Part #	Qty
1	EOB Sensor -Deutsch Plug	006-7401	1
2	Harness Extension (10')	006-7401EXT	1
3	SC Bracket	001-4648SI	1
4	Sensor Bracket	001-4648RB	1
	Complete Assembly	**030-0700SCK**	

The optional stroke/flake counter sensor is added to display the number of plunger strokes that were used to make a bale. This sensor works in combination with the end of bale sensor and sends the information to the IPM. The information is saved in the job records and is also displayed on the run screen in Automatic or Manual modes.
Using extension harness (006-7401EXT) connect sensor (006-7401) to port on main baler harness labeled 'stroke count'. Route harness to avoid pinch points and secure using cable ties. Follow the steps below for your specific baler applicator base kit to mount the optional stroke counter sensor.

Models 742M, 744 & 750

The stroke counter may be used as a flake counter for these balers by installing at the right-side hay dog. Bracket modification may be required to place the sensor 1/4" away from bale chamber hay dog (when engaged) on the outside of the bale chamber (Figure 1). The sensor needs to clear the hay dog lever to register each time a flake has been made.

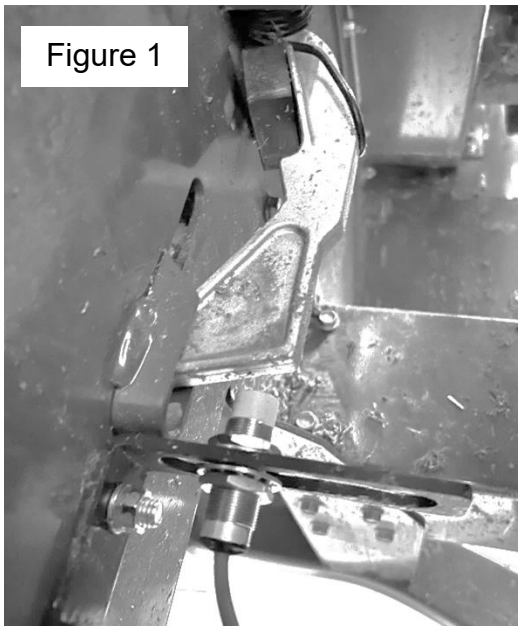
Figure 1

Alternative Mounting Option:
Open the left access panel as shown (Figure 2). The end of the sensor (A) will be aligned with the bolt head (B). With the tractor turned off and the PTO disconnected from the tractor, rotate the balers flywheel so that the bolt head (B) is at it lowest position. Locate bracket 001-4648RB (B) and loosely install the sensor. Align the end of the sensor over the bolt head (B) and mark the two 3/8" (10mm) holes that will need to be drilled to mount the bracket (C). Install the bracket using two 5/16 x 1" bolts, flats, locks, and nuts. Close the access panel (Figure 3) and adjust the sensor so that it is 1/4" (7mm) away from the bolt head (B). Tighten the nuts on the sensor after the adjustment is made.
Leave enough slack in the wire to allow the access door to function.

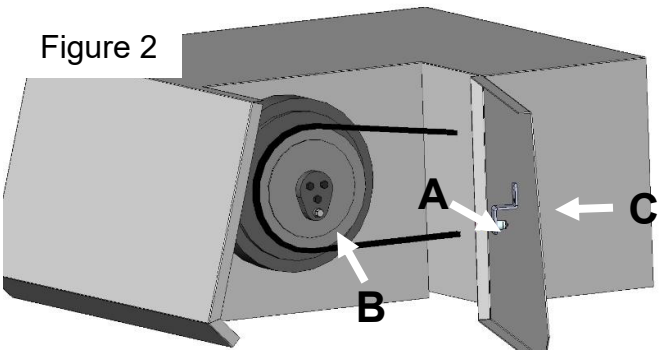

Figure 2

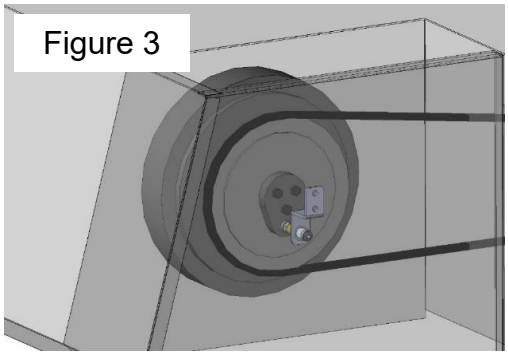
Figure 3

Model 745
Locate the gathering fork arm area shown (Figure 4) on the baler as shown from standing at the front of the baler and looking to the back. The bracket will mount on the steel next to the bearing on the gathering fork. Point (A) is the sheet metal on the back of the baler, point (B) is the steel that holds the gathering fork bearing, point (C) is the back arm on the gathering fork.

Locate the sensor bracket (001-4648RB). Mark and drill two 3/8” (10mm) holes to mount the bracket (D). Attach the bracket using two 5/16 x 1” bolts, flats, locks, and nuts. Loosely install the sensor into the bracket. With the tractor turned off and the PTO disconnected from the tractor, rotate the flywheel by hand to get the end of the sensor lined up with the gathering fork (C). The end of the sensor needs to be 1/4” (7mm) away from the gathering fork. After the adjustments are made tighten both nuts on the sensor.

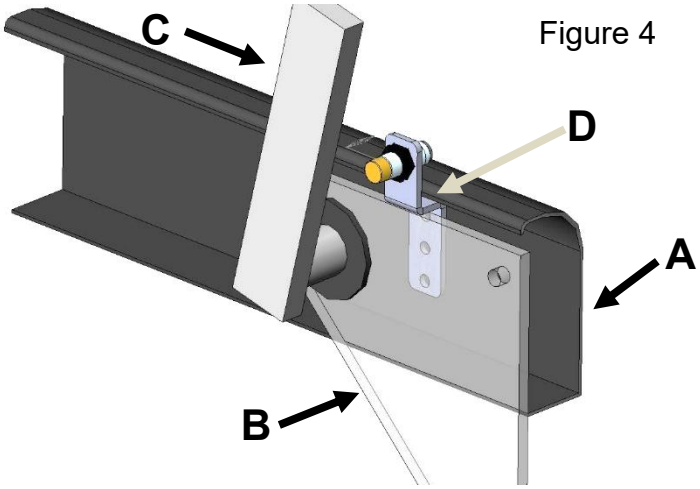

Figure 4

Model 751
Locate the steel behind the gathering fork (Figure 5). (Figure 6) shows the steel from the back of the baler as would be front and left. Mark and drill the 3/4” (19mm) hole for the sensor to mount through. With the tractor turned off and the PTO disconnected from the tractor, rotate the baler fly wheel by hand until the gathering fork arm is directly in front of the 3/4” (19mm) hole. Install the sensor and position so that the end of the sensor is 1/4” (7mm) away from the fork. Tighten the nuts on both sides of the sensor after the adjustment.

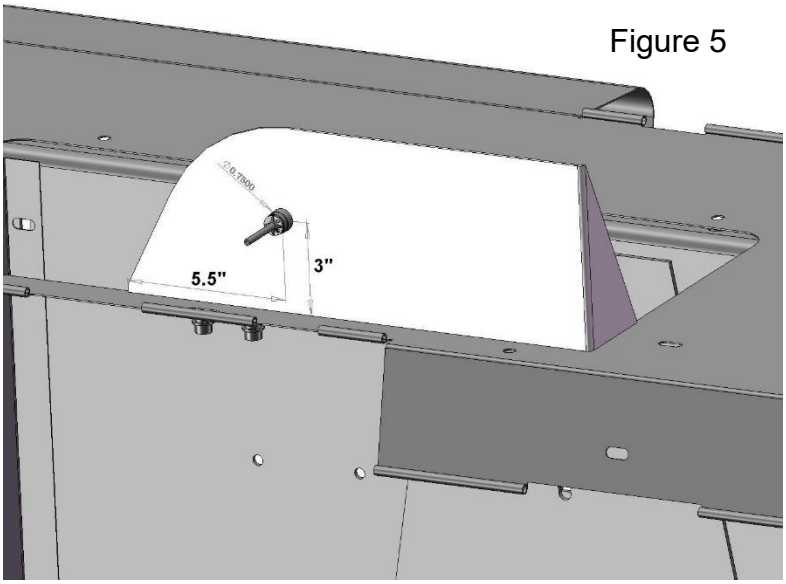

Figure 5

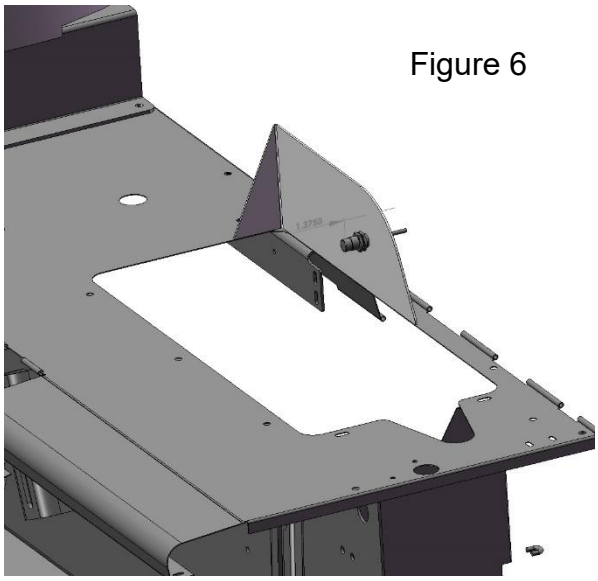
Figure 6

<u>Star Wheel Moisture Sensor Kit</u> (MSH-7SS-A or MSH-7SS-B)

1. Locate spacer plates (001-6707ES), both star wheel moisture sensors (030-4642U / UE) and hardware parts bag. Note: twine diverters (001-4644H / 4645H) are optional additions for small square balers.
2. The star wheels will be placed as close to the knotter as possible. Follow installation instructions for your specific baler model.
3. Install with four (two per side) 5/16” x 3-1/4” Allen buttonhead cap screws. Make sure the Allen heads are in the bale chamber side of the star wheel.
4. The star wheel with the 6-position plug (030-4642UE) must rotate in the indicated clockwise direction as the bale moves thru the bale chamber. Reference the rotation indicator sticker on star wheel block. (Encoder star wheel pairs with twine diverter with two extra holes, 006-4644H).
5. The star wheel with the 2-postion plug (030-4642U) is placed on the opposite side of the bale chamber. (Non-encoder star wheel pairs with twine diverter 006-4645H).
6. Place a spacer plate between each star wheel block and the bale chamber (twine diverters on top).
7. Secure spacer plates and star wheels (and optional twine diverters if added) to baler with 5/16” hex nuts and lock washers. Hand tighten with wrench or ratchet- not to exceed 13 ft-lb torque. **<u>DO NOT USE AN IMPACT TO TIGHTEN.</u>** Over torquing star wheel mounting hardware can cause pre-mature wear of the star wheel blocks.
8. Connect moisture harness (006-7307EM2 or 006-7307EM3) to both star wheels.
9. Route Moisture Harness (006-7303EM2 or 006-7307EM3) along baler frame to the ISO pump module located on the tank saddle at the back of the baler.
10. Attach rectangle plug of moisture harness to bottom of ISO pump module (IPM).

The following pages contain detailed instructions for specific baler make and models:

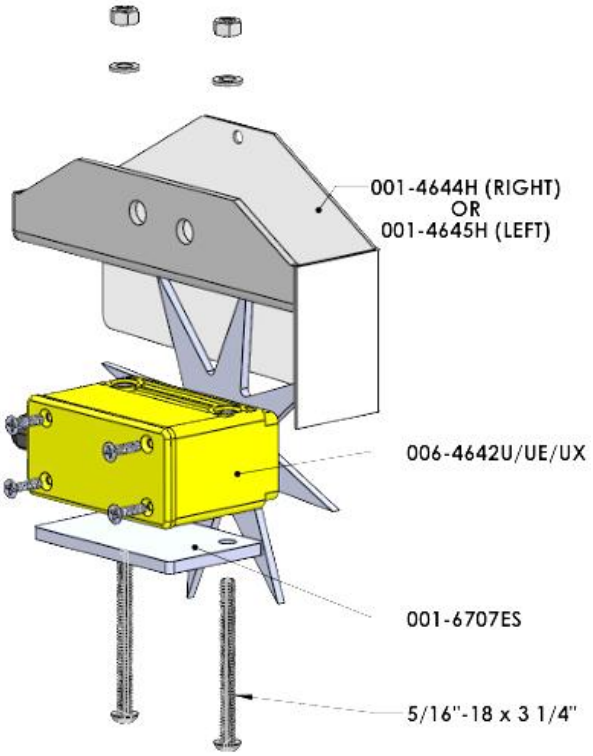

Star Wheel Sensors (030-4642U/UE)
700 Series Systems – Reinforced Yellow Block 2026

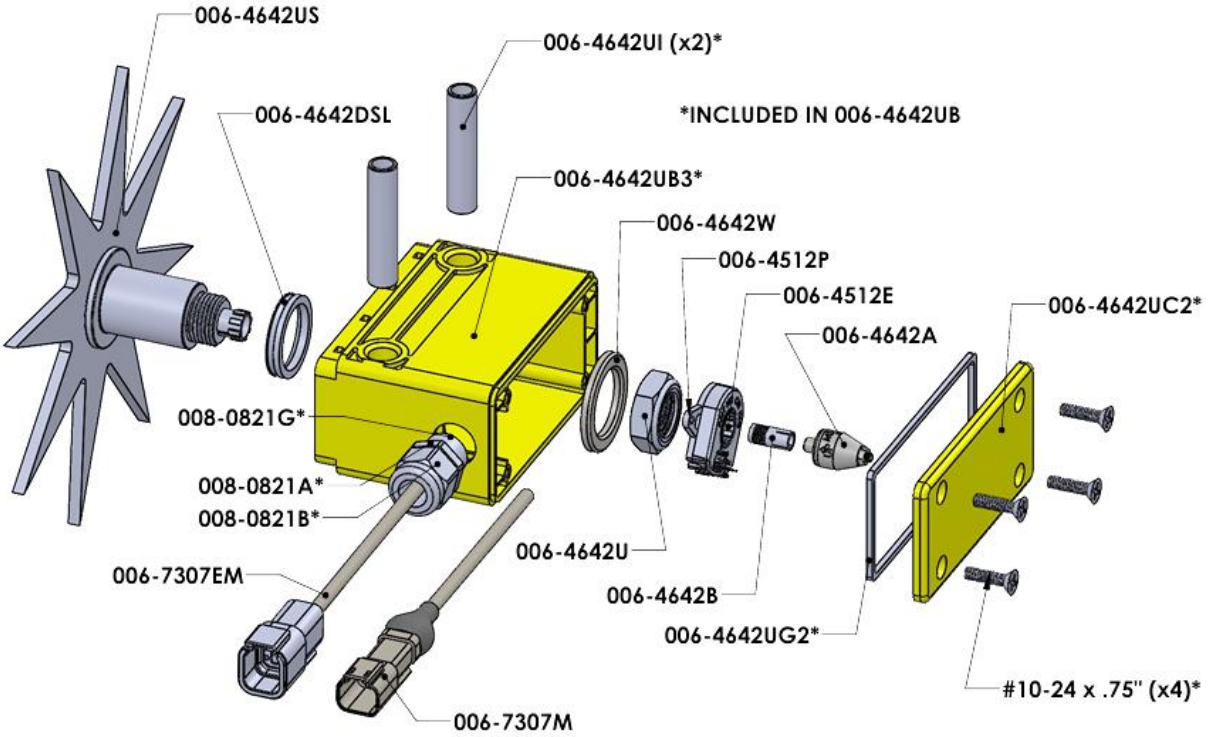

Description	Part#	Qty
Star Wheel (includes swivel insert)	006-4642US	1
Dust Seal Gasket	006-4642UG	1
Star Wheel Block Only	006-4642UB3	1
Star Wheel Block End Cap	006-4642UEC	1
Block Inserts	006-4642UI	2
Wire Compression Grommet	008-0821A	1
Grommet Locking Nut (internal)	008-0821B	1
Washer for Wire Grommet	008-0821G	1
Bearing Washer	006-4642W	1
Star Wheel Nut	006-4642U	1
Encoder Mount (030-4642UE only)	006-4512P	1
Encoder (030-4642UE only)	006-4512E	1
Swivel Insert	006-4642B	1
Electric Swivel	006-4642A	1
Star Wheel Block Gasket	006-4642UG2	1
Star Wheel Block Cover	006-4542UC2	1

Description	Part#	Qty
Encoder Harness Plug (6 Pin) (030-4642UE only)	006-7307EM	1
Moisture Harness Plug (2 Pin) (030-4642U only)	006-7307M	1
Star Wheel Spacer Plate (not pictured)	001-6707ES	1
Star Wheel Mounting Hardware (5/16" x 3-1/4" Allen Head Screws, nuts, locks and washers)		2

Optional Star Wheel Accessories:

Twine Guard -Left	001-4645H
Twine Guard -Right	001-4644H
Star Wheel Drilling Template	001-4642T
Replacement Star Wheel Block*	001-4642UB
Complete Non-Encoder Star Wheel	**030-4642U**
Complete Encoder Star Wheel	**030-4642UE**

Moisture Harnesses

Description	Part #
Moisture Wire Harness (12' & 13' Length Sections)	006-7307EM2
Moisture Wire Harness (16' & 17.5' Length Sections)	006-7307EM3
MF DB Moisture Harness (for 3 Sensor Connections)	006-7307EMX
Kubota DB Moisture Harness (for 4 sensor connections)	006-7307EMK

Star Wheel Moisture Sensors

Installation

The pair of star wheels will need to mount on the bottom side as close to the front of the bale chute as possible and at least 3/8" (10mm) away from any metal. They will need to maintain a safe distance away from the twine.

The star wheels will require two holes to be drilled per block. When drilling make sure to keep the wheel square to the bale chamber. Any angle will cause stress on the wheel and will eventually cause the wheel to work itself out of the block. Some balers may require a notch cut on the bottom of the bale chamber to mount the star wheels in parallel and as close to the front of the chamber as possible- Star Wheel Installation template reference is within the following pages.

Use the supplied bolts and place the carriage head inside of the bale chamber followed by lock and nut. Next, place spacer plate between star wheel block and bale chamber and attach the star wheels to the bolts followed by flat washer, lock washer and nut.

The star wheel with the 6-pin plug will need to be placed on the left-hand side of the bale chamber, rotating the star in a clockwise direction as bales move through the chamber.

Connect moisture harness to star wheels and run the harness along the baler frame towards the ISO Pump Module (IPM) controller harness.

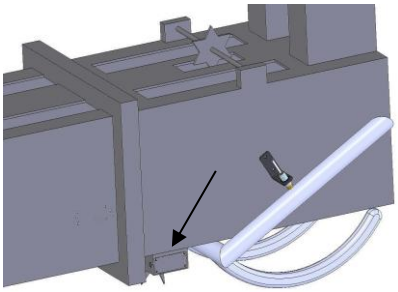

Model 751

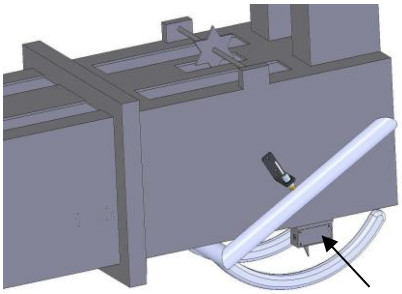

Model 742M, 744, 745 & 750

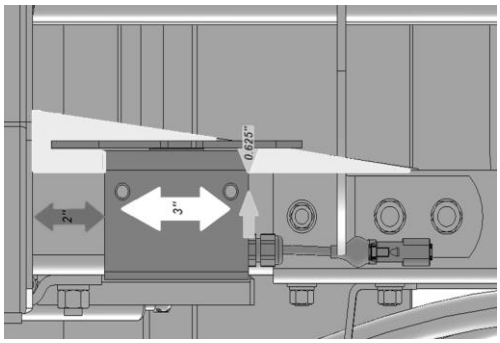

Some balers may require notching to allow for star wheel clearance- see template for details

Installation For MF 1842S Balers

Align step of star wheel block with inside end of chamber, with rear edge of star wheel block approximately 1/4" from the end of bracket.

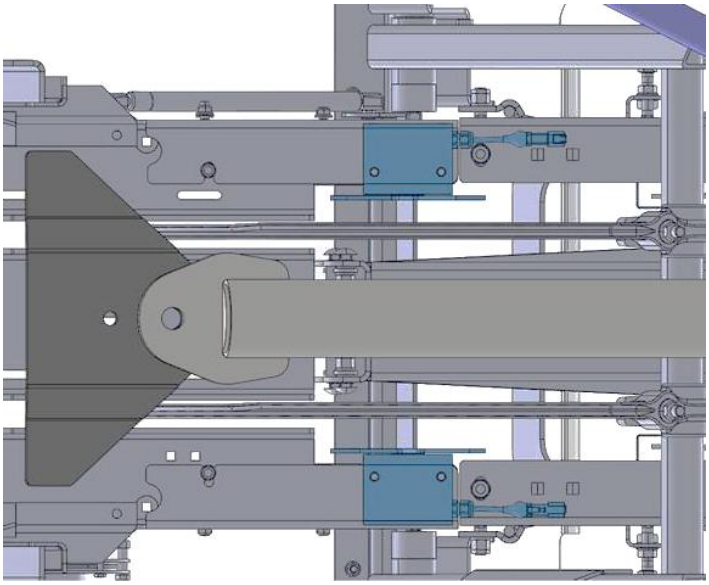

Star Wheel Installation Guide

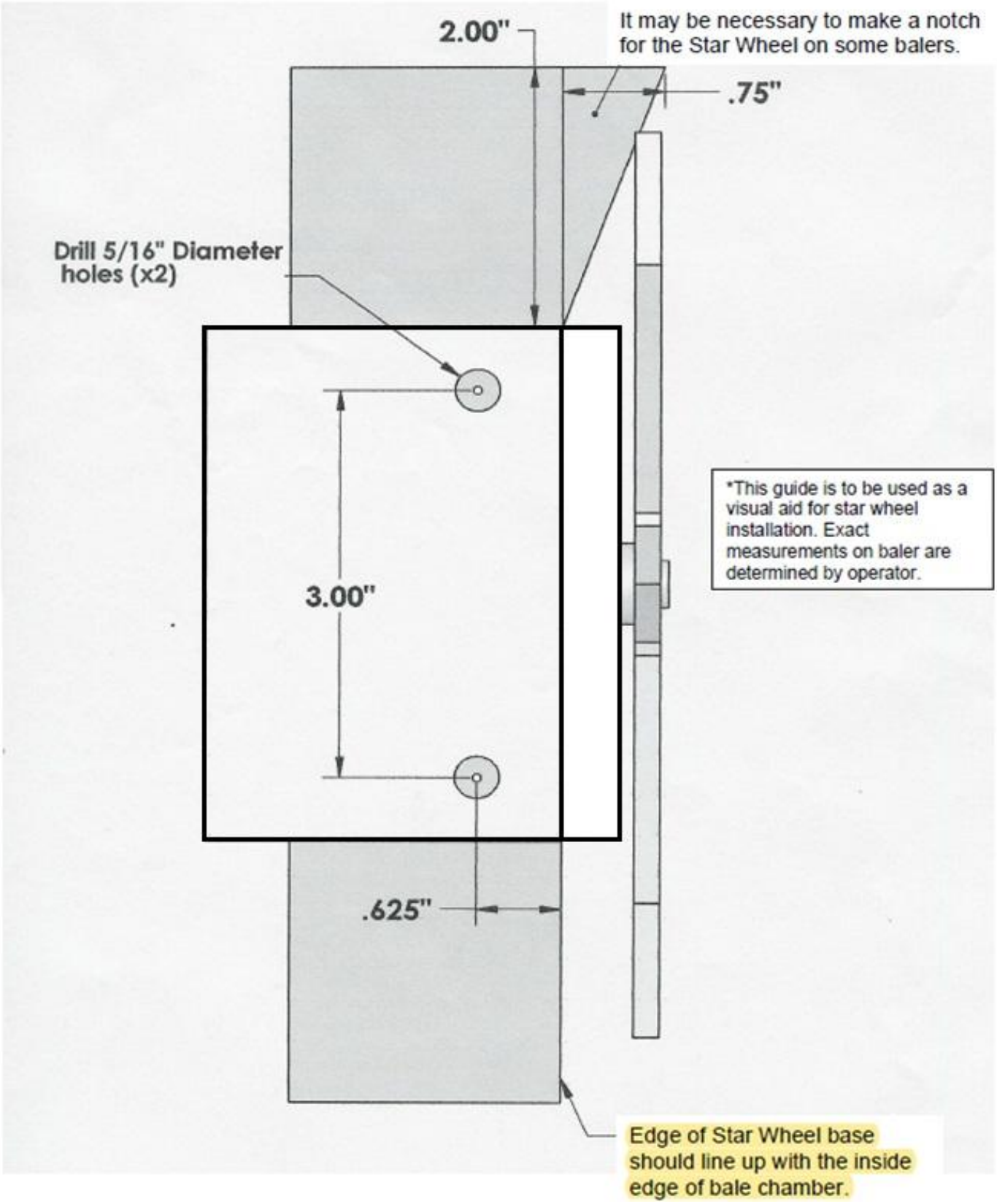

Tractor Setup

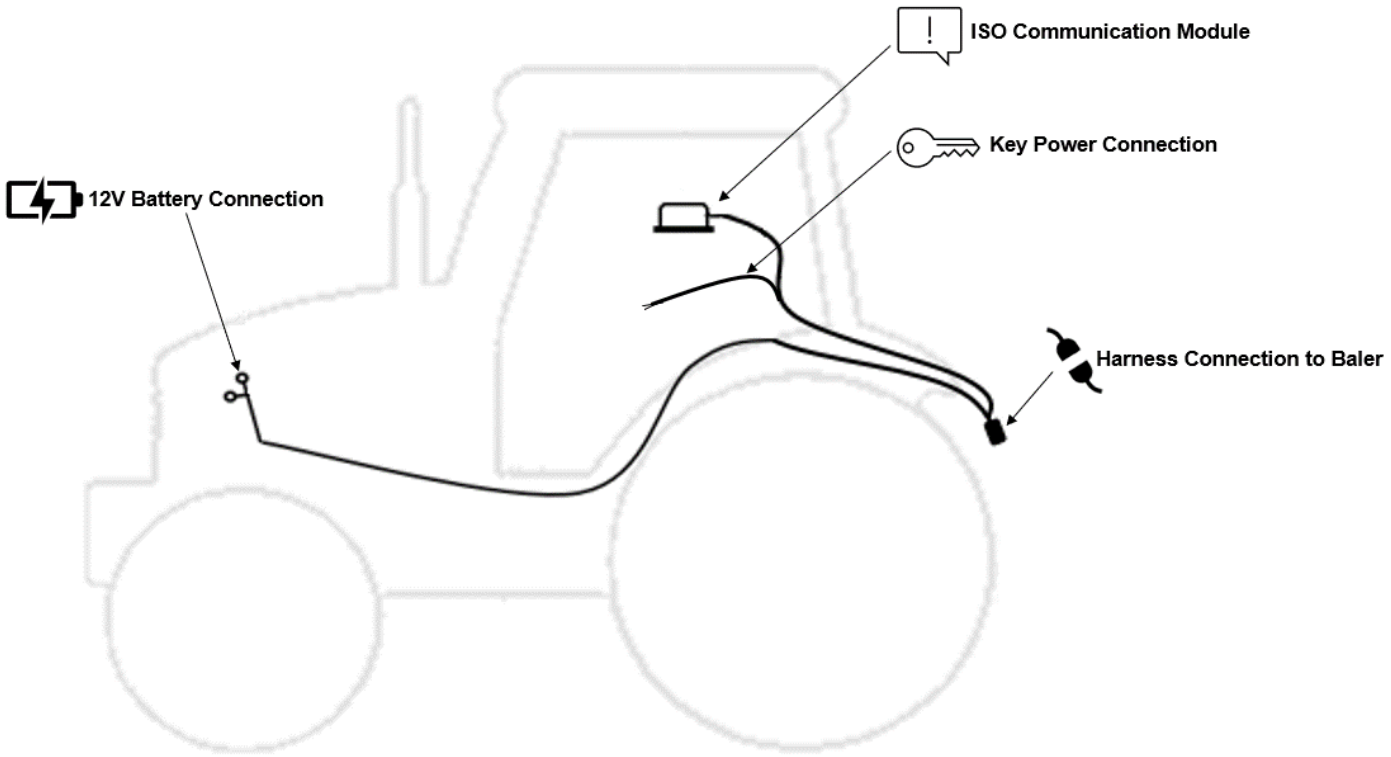

The general tractor setup of the 700 Series applicator can be seen above. The main harness of interest is the tractor power/communication harness (006-765IC). This harness will connect at the tractor battery, to the ISO Communication Module (ICM) mounted in the cab, a keyed power connection point, and connect at the hitch area to the baler power/communication harness (006-765B). View below to see highlighted installation instruction:

12V Battery Connection

The 12V battery connection must be at the tractor battery. Connection to alternative locations such as an accessory port can cause problems with applicator system.
MUST BE CONNECTED DIRECT TO TRACTOR BATTERY TERMINALS

ISO Communication Module

The ISO communication module is to be mounted inside the cab. Other mounting locations can lead to issues with weathering and operation. Once installed and the system is powered, a green light will turn on with the ICM module.

Key Power Connection

Ensure a solid keyed connection is found inside the cab and wired into. Poor keyed power connection can result in applicator system issues.

Harness Connection to Baler

The tractor harness connects at the hitch to baler power/communication harness (006-765B). This will allow the system components to communicate with one another. Ensure connections are debris and corrosion free.

Display Options

Optional Harvest Tec Display

The 700 series Harvest Tec Display will allow you to set your real time baling parameters to ensure the most precise application to every bale. This is done by utilizing the improved touch technology to select objects, enter data, and swipe through operational screens.

The Harvest Tec Display offers easy integration by connecting to the additional CAN plug on the 006-765IC harness. Once connected the Harvest Tec display will power up with applicator system.

Note: The Harvest Tec Display must be used as a standalone display, the baler cannot run both ISO integrated (with compatible large square balers only) and also on the Harvest Tec Display. Must be one or the other. Removal of the baler integration harness is required to use the HT Display. Baler ISO integration option is not available for small square and round baler systems.

Optional Tablet Display

Precision Baling App

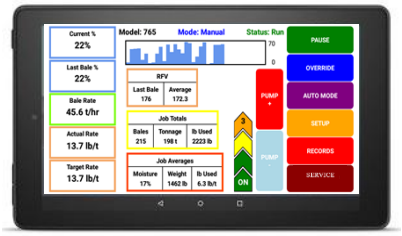

The iOS or Android Tablet displays offer the ability to communicate with the 700 series applicator system via hard-wired connection to the ISO Communication Module (ICM). Through the free Precision Baling App, the operator can set real time baling parameters to ensure the most precise application to every bale. This provides a multi-use option while utilizing the improved app to select objects, enter data, and easily switch through operational screens.

The Tablet Display offers easy integration by connecting a data transfer/charging cable to the USB port on the ICM module (USB port closest to LED light). The Harvest Tec Applicator will display upon opening the app and powering up the applicator system when connected. Tablets can be used in addition to ISO integrated baler VT display (on compatible large square baler systems only).

***Made for iPad® (iOS 15 or higher) or Android Tablet (Does not work with Amazon Fire).**
Required to be running the current operating system or one version previous.
iPads 10+ years are no longer supported by Apple and are unable to download app.
*iPad is a trademark of Apple Inc., registered in the U.S. and other countries.

Optional Harvest Tec Display Kit (030-7670DK)

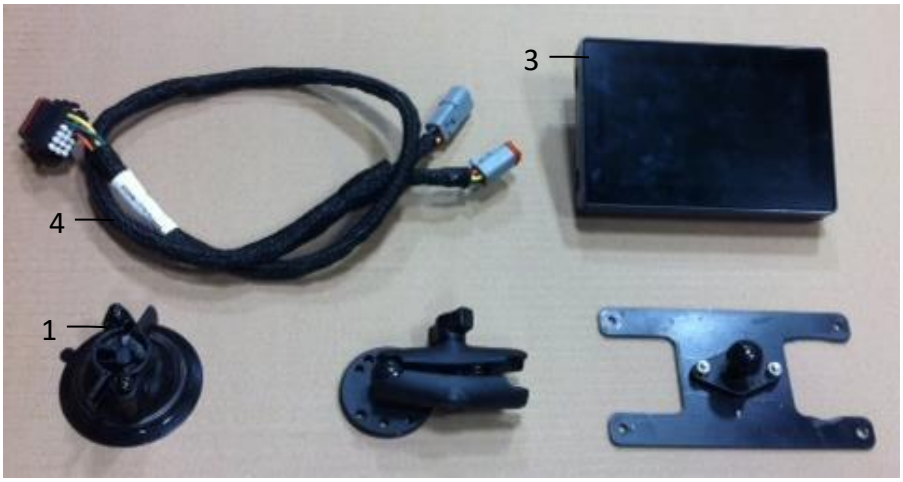

Ref	Description	Part #	Qty
1	Suction Cup Mount	001-2012SCM	1
2	Ram Mount	001-2012H	1
3	Harvest Tec Display	006-765GVT	1
4	Display Harness	006-765GH	1
5	Mounting Plate	001-700GH	1
NP	700 Series Resistor	006-700R	1

Complete HT Display Kit 030-7670DK

Installation Instructions

1. Connect 006-765GH harness connection to 006-765IC tractor harness key power plug.
2. Connect 006-765GH harness to the Harvest Tec VT Display before tightening mount in place.
3. Tighten the mounting and display. Streamline harness as necessary.
4. Once connected, power cycle the system and ensure display is working properly.

NOTE: CANNOT OPERATE APPLICATOR SYSTEM WITH HARVEST TEC DISPLAY AND BALER ISO INTEGRATION or TABLET/ iPad AT THE SAME TIME.

Optional Android Display Kit (030-1670DK)

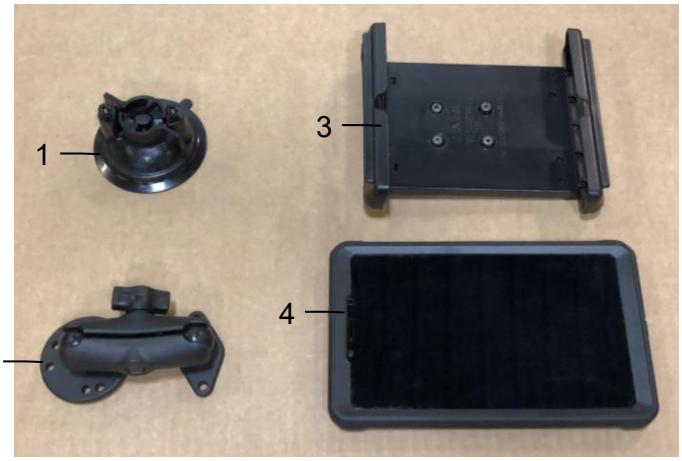

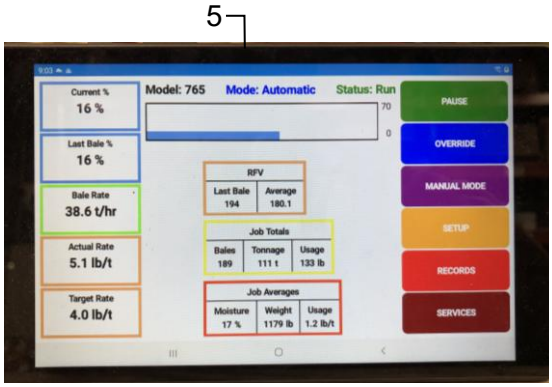

Ref	Description	Part #	Qty
1	Suction Cup Mount	001-2012SCM	1
2	Ram Mount	001-2012H	1
3	Spring Load Cradle	001-2012SLC	1
4	Android Case	001-2012A1	1
5	Android Tablet	006-1670AT	1
NP	USB-C to USB-A Cable	006-6672USBX	1

Complete Android Tablet Display Kit **030-1670DK**

Note: Use a quality communication cable ending with a USB-A connection to connect tablet to (006-765ICM) control module - plug into the USB port showing a tablet.

Optional iPad Display Kit (030-6670DK)

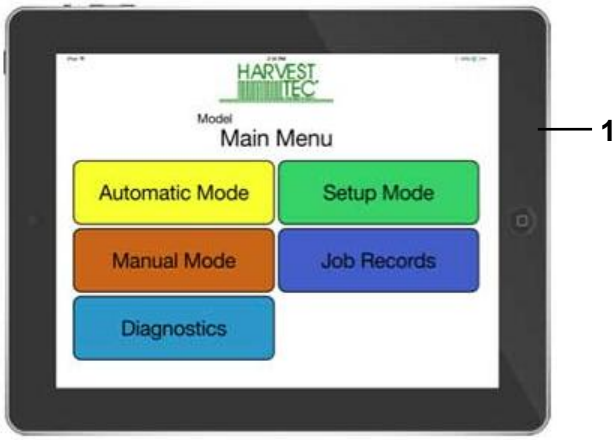

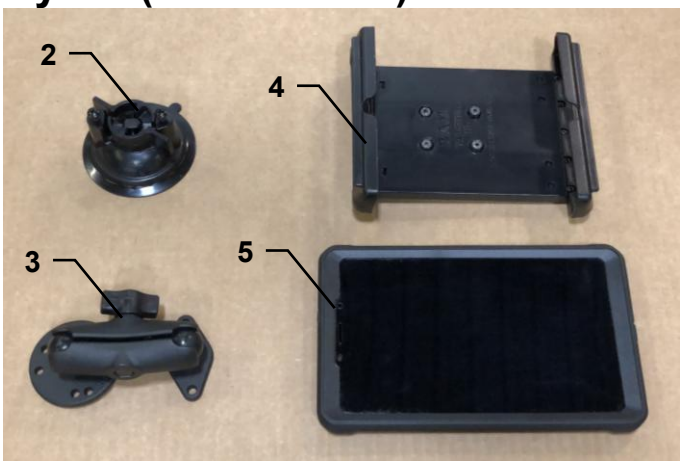

Ref	Description	Part #	Qty
1	iPad Mini 6	006-6670IP	1
2	Suction Cup Mount	001-2012SCM	1
3	Ram Mount	001-2012H	1
4	Spring Load Cradle	001-2012SLC	1
5	iPad Mini 6 Case	001-2012C6	1
NP	Power/Comm. Cable	006-6672USBX	1

Complete iPad Mini Display Kit **030-6670DK**

iPad mini is a trademark of Apple Inc., registered in the U.S. and other countries

Optional ISO Display Adapter Harness (006-7670A or 006-7670F)

For use with a dedicated ISO display

The 700 Series Applicator has the option to tie into compatible dedicated ISO monitors by utilizing the diagnostic port. When connected, the Harvest Tec System will populate as its own object pool within the ISO display. When this object pool is selected, the ISO monitor will then function as a dedicated monitor for the Harvest Tec System.

The Harvest Tec System will function as a stand-alone system when using this adapter.
System will not integrate with the baler ISO system software when using this adapter.

Any tablet connected to the ICM module must be disconnected from the ICM before the Harvest Tec Object Pool screen will activate within the ISO display.
To connect Adapter Harness (006-7670A or 006-7670F), unplug the 4-pin Key Power Plug (006-765CPH) connection from the Tractor Harness (006-765IC) and replace with the plug from the Adapter Harness. Connect the round plug end of the Adapter Harness to the Tractor ISO Display Diagnostic port.

Scan the QR code to view a short video of the
Adapter Harness for ISO Display:

For additional product and service information:
See our YouTube Channel https://www.youtube.com/@harvesttec

ISO Diagnostic Port Adapter (006-7670A)

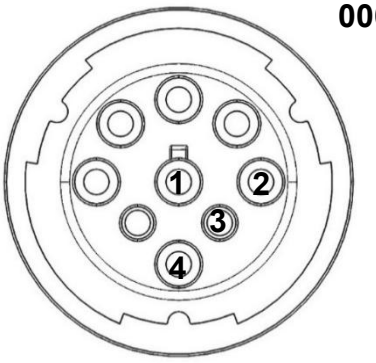

006-7670A connecting plug and pin

Pin 1	Black	Ground
Pin 2	Yellow	CAN High
Pin 3	Green	CAN Low
Pin 4	Red	12V+ Key Power

ISO Diagnostic Port Adapter (006-7670F)

For Newer Fendt and MF Tractors with plug location in the cab ceiling

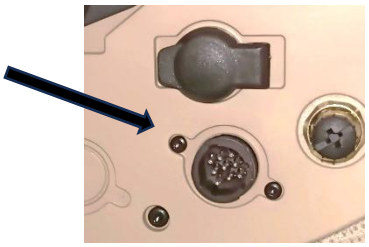

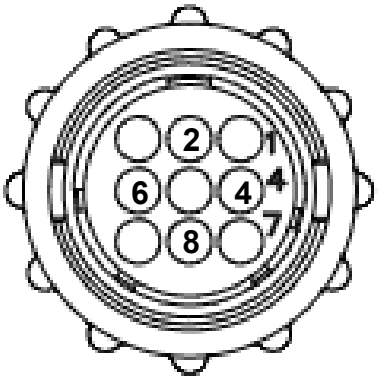

006-7670F connecting plug and pin

Pin 8	Black	Ground
Pin 4	Yellow	CAN High
Pin 2	Green	CAN Low
Pin 6	Red	12V+ Key Power

Wiring Diagram – 744, 745, 750, 751 Series

1. Connect the power harness (006-765IC) to the tractor battery (12 volt) using the red wire with fuse to the positive side and the black wire to the negative.
   A. **The power harness must be connected to the battery!**
      CONTACT HARVEST TEC BEFORE MODIFICATIONS.
      The unit will draw more amps than convenience outlets can handle. Any modifications of the power harness will void systems warranty
   B. **This unit will not function on positive ground tractors.**
   C. **If the unit loses power while operating it will not keep track of accumulated pounds of product used.**
2. The power harness on the tractor (006-765IC) will run from the tractor battery to the hitch. The power harness on the baler (006-762B) will connect to the tractor power harness (006-765IC) at the hitch.
3. Connect the keyed power wire (006-765CPH) to a keyed power source on the tractor.
   The keyed power wire must connect to a keyed source or the unit will not power up correctly.
4. Attached the ISO Communication Module (006-6673) to the tractor power harness (006-765IC).
5. Attach the End of Bale (EOB) connection on baler harness (006-762B) to the EOB Sensor (006-7401).
6. Attach the Solenoid (SOL 1) connections on the baler harness (006-762B) and to the solenoids (002-2203F).
7. Attach the Flowmeter (006-4724A) to the Pump Module connection on pump plate assembly.
8. Attach the rubber molded connector on pump plate to the Pump (007-4120DE).
9. Attach star wheel (030-4642U/UE) connection to the pump module
10. Ensure 006-700R terminator is connected to CAN/IDM port on 006-762B harness

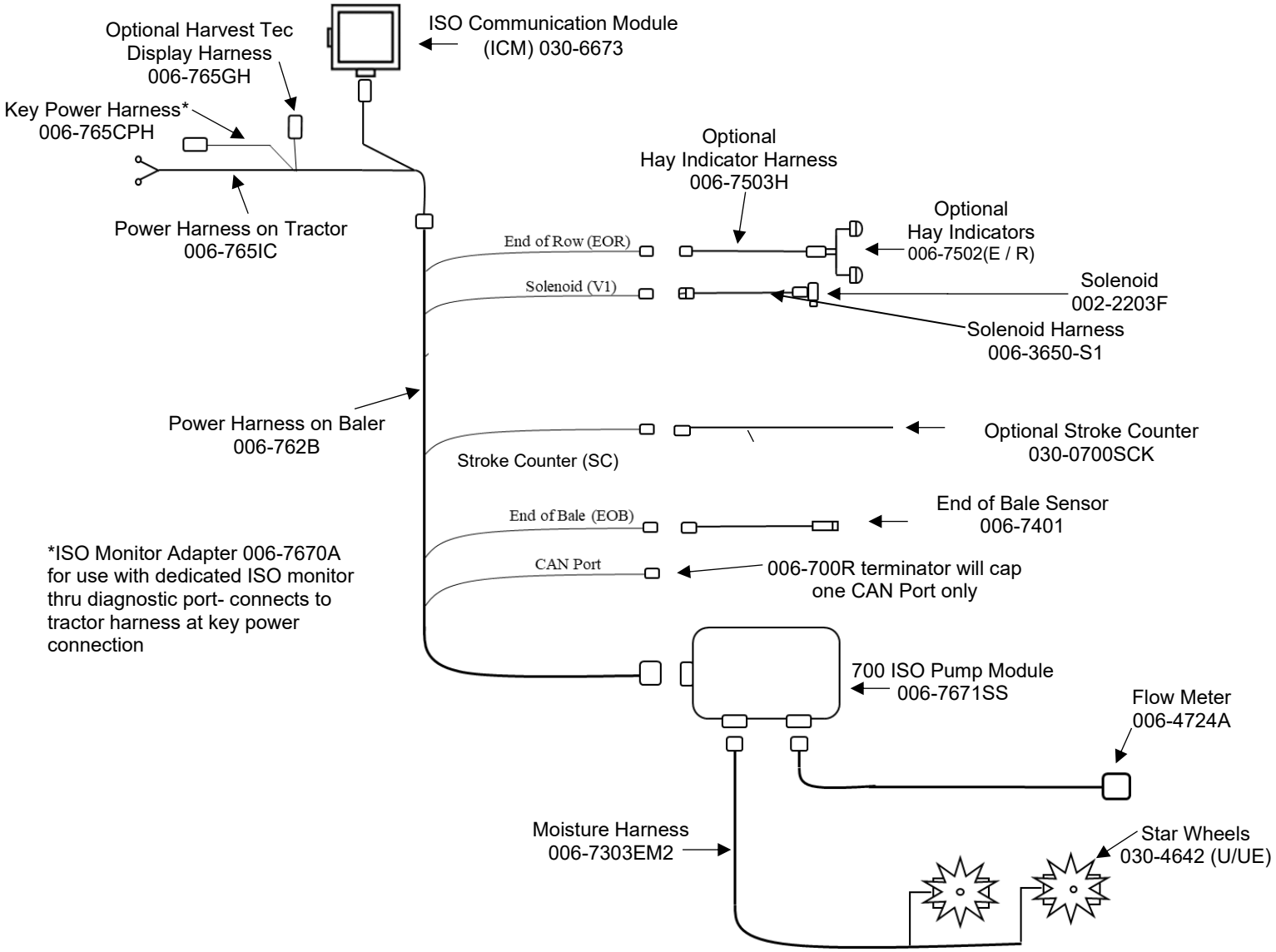

Pin Outs

Integrated Control Module (ICM) on Tractor Harness 006-765IC

(Deutsch Plug Number: DTM06-12SA)

Pin 1	Red	+12V from ECU
Pin 2	Purple	Signal Wire
Pin 3	Red/White	+12V CAN X
Pin 4	Black/White	Ground CAN X
Pin 5	Orange	CAN X Hi
Pin 6	Blue	CAN X Lo
Pin 7	Green	ISO CAN Lo
Pin 8	Yellow	ISO CAN Hi
Pin 9	White	GPS Expansion 1
Pin 10	Gray	GPS Expansion 2
Pin 11	Brown	GPS Expansion 3
Pin 12	Black	Ground from ECU

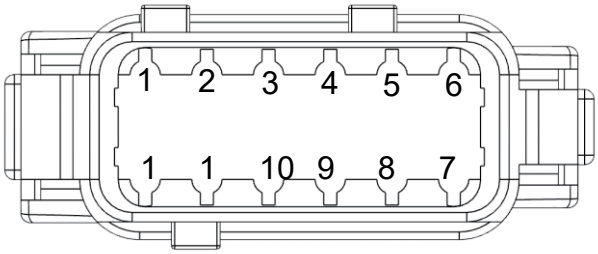

ISOBUS Plug on Tractor Harness 006-765IC

(Deutsch Plug Number: DT04-4P)

Pin 1	Red	+12V from ECU
Pin 2	Yellow	ISO CAN Hi
Pin 3	Green	ISO CAN Lo
Pin 4	Black	Ground from ECU

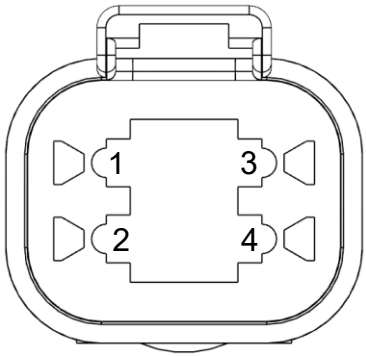

Power / Communication Tractor Harness 006-765IC at Baler Hitch

(Deutsch Plug Number: HDP24-24-18PN)

Pin 1	Not Used	----
Pin 2	Yellow	ISO CAN Hi
Pin 3	Green	ISO CAN Lo
Pin 4	Red	+12V Power to ECU
Pin 5	Black	Ground to ECU
Pin 6	Red	+12V From Battery
Pin 7	Not Used	----
Pin 8	Black	Ground From Battery
Pin 9	Not Used	----
Pin 10	Purple	Signal Wire
Pin 11	Red/White	+12V CAN X
Pin 12	Black/White	Ground CAN X
Pin 13	Orange	CAN X Hi
Pin 14	Blue	CAN X Lo
Pin 15	White	GPS Expansion 1
Pin 16	Gray	GPS Expansion 2
Pin 17	Brown	GPS Expainsion 3
Pin 18	Not Used	----

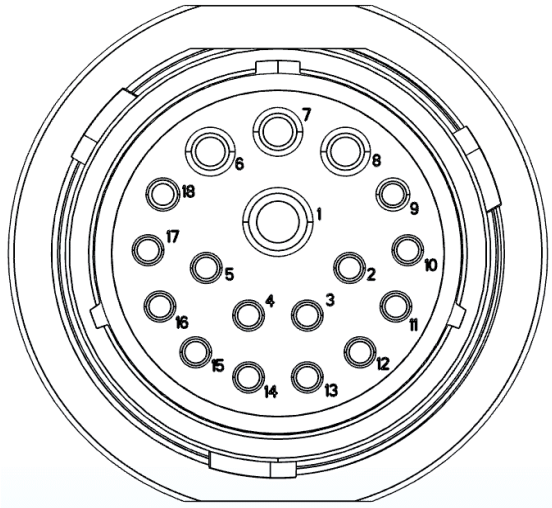

Pin Outs (continued)

Power / Communication Baler Harness 006-765B at Baler Hitch IPM
(Deutsch Plug Number: HDP26-24-18SN)

Pin 1	Not Used	----
Pin 2	Yellow	ISO CAN Hi
Pin 3	Green	ISO CAN Lo
Pin 4	Red	+12V Power to ECU
Pin 5	Black	Ground to ECU
Pin 6	Red	+12V From Battery
Pin 7	Not Used	----
Pin 8	Black	Ground From Battery
Pin 9	Not Used	----
Pin 10	Orange/White	+12V Power to EOR
Pin 11	Not Used	----
Pin 12	Not Used	----
Pin 13	Not Used	----
Pin 14	Not Used	----
Pin 15	Not Used	----
Pin 16	Not Used	----
Pin 17	Not Used	----
Pin 18	Not Used	----

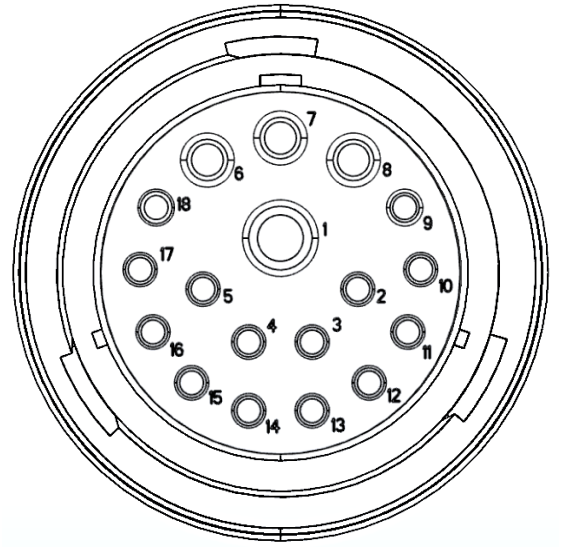

Power / Communication Baler Harness 006-765B at IPM Module
(Deutsch Plug Number: HDP24-24-18SN)

Pin 1	Not Used	----
Pin 2	Yellow	ISO CAN Hi
Pin 3	Green	ISO CAN Lo
Pin 4	Red	+12V Power to ECU
Pin 5	Black	Ground to ECU
Pin 6	Red	+12V From Battery
Pin 7	Not Used	----
Pin 8	Black	Ground From Battery
Pin 9	Not Used	----
Pin 10	Orange/White	+12V Power to EOR
Pin 11	Orange/Black	Ground to EOR
Pin 12	Purple/Green	EOR Signal
Pin 13	Blue/White	EOB Signal
Pin 14	Gray/Red	+12V Power to Solenoid 1
Pin 15	White/Black	Ground to Solenoid 1
Pin 16	Orange/Red	+12V Power to Solenoid 2
Pin 17	White/Black	Ground to Solenoid 2
Pin 18	Not Used	----

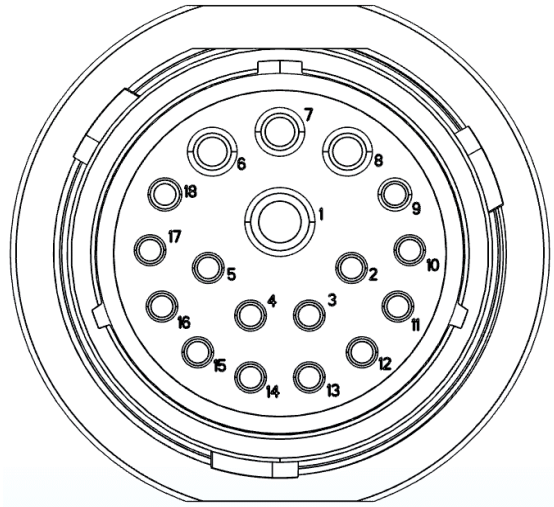

*IPM Module Whip Plug- Pin # 5 Not Used

Solenoid 1 Plug on Baler Harness 006-765B
(Deutsch Plug Number: APTIV 12052641)

Pin B	Gray/Red	+12V to Solenoid 1
Pin A	White/Black	Ground to Solenoid 1

Solenoid 2 Plug on Baler Harness 006-765B
(Deutsch Plug Number: APTIV 12052641)

Pin B	Orange/Red	+12V to Solenoid 2
Pin A	White/Black	Ground to Solenoid 2

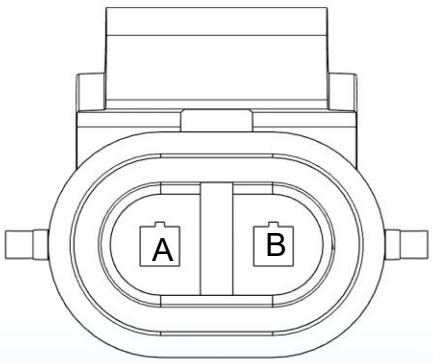

Pin Outs (continued)

CAN / IDM on Baler Harness 006-765B

(Deutsch Plug Number: DT06-4S)

Pin 1	Red	+12V to Solenoid 2
Pin 2	Yellow	ISO CAN Hi
Pin 3	Green	ISO CAN Lo
Pin 4	Black	Ground to Solenoid 2

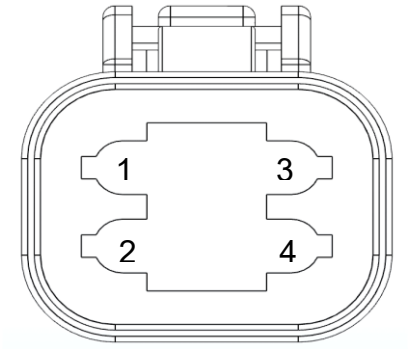

End of Bale Sensor Plug on Baler Harness 006-765B

(Deutsch Plug Number: DT06-3S)

Pin 1	Orange/White	+12V to End of Bale Sensors
Pin 2	Orange/Black	Ground to End of Bale Sensors
Pin 3	Blue/White	Signal

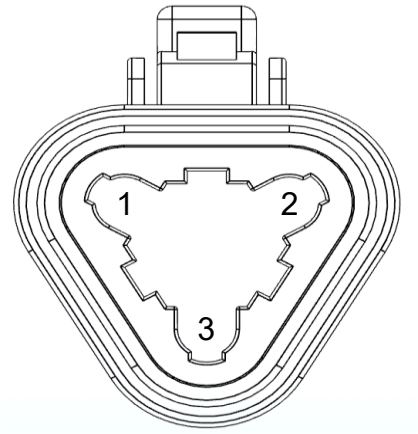

End of Row Sensors Plug on Baler Harness 006-765B

(Deutsch Plug Number: DT06-3S)

Pin 1	Orange/White	+12V to End of Bale Sensors
Pin 2	Orange/Black	Ground to End of Bale Sensors
Pin 3	Blue/White	Signal

Integration Harness Plug on Baler Harness 006-765B

(Plug: APTIV 12052848)

Pin A	Not Used	----
Pin B	Red	+12V Power
Pin C	Not Used	----
Pin D	Gray	Ground
Pin E	Orange	CAN Hi
Pin F	Blue	CAN Lo

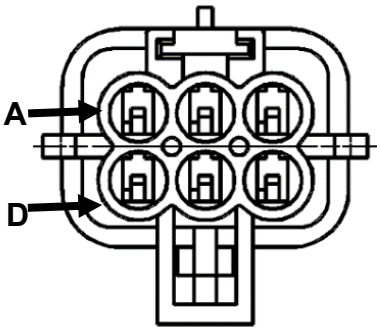

Pump Connection on 700 Controller Harness

(16 AWG Two-Wire Plug)

Pin 1	Red	Power to Pump
Pin 2	Black	Ground to Pump

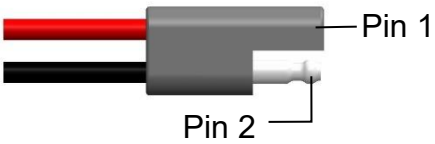

4409C Installation Kit

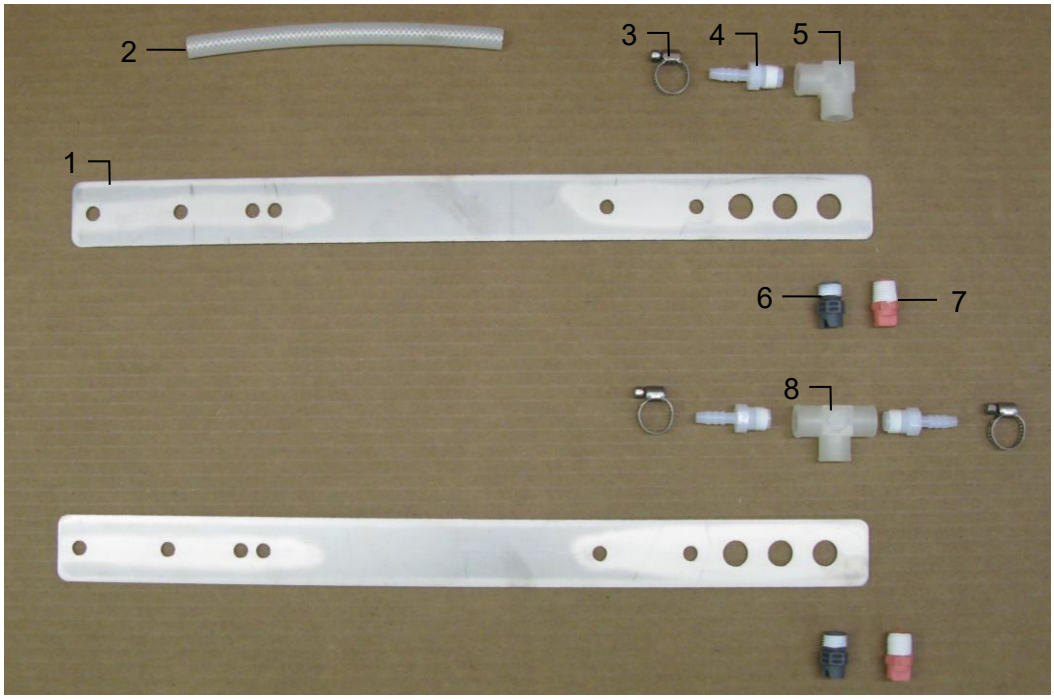

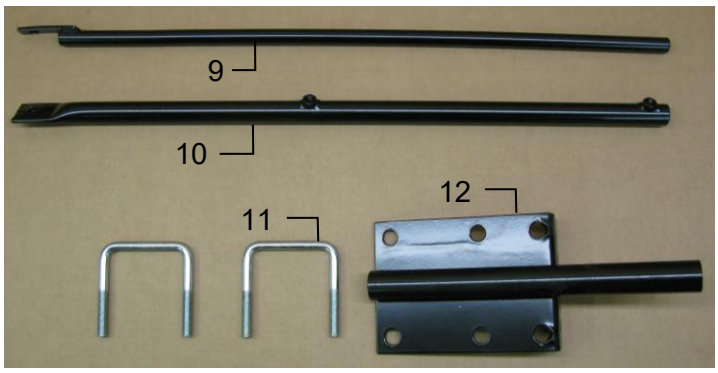

Ref	Description	Part #	Qty
1	Nozzle Holder	001-4215	2
2	1/4" Hose	003-9016	3
3	Mini Hose Clamp	003-9002	3
4	1/4" x 1/4" Straight Fitting	003-A1414	3
5	1/4" Female Street Elbow	003-SE14F	1
6	Tip* -Std Output	004-T6504-PT	2
7	Tip* -Low Output	004-T6501-PT	2

Ref	Description	Part #	Qty
8	1/4" Tee Sq	003-TT14SQ	1
9	Reach Rod – Outside	001-4404	1
10	Reach Rode – Inside	001-4405	1
11	1/2" x 4" U-Bolt	001-4406A	2
12	Base Bracket	001-4406	1

Shield Only (Ref 1-8)	030-4409C-SO
Tank Mount Kit (Ref 9-12)	TMK-4401
Complete Assembly	**030-4409C**

* Tip color subject to change

4410C Installation Kit

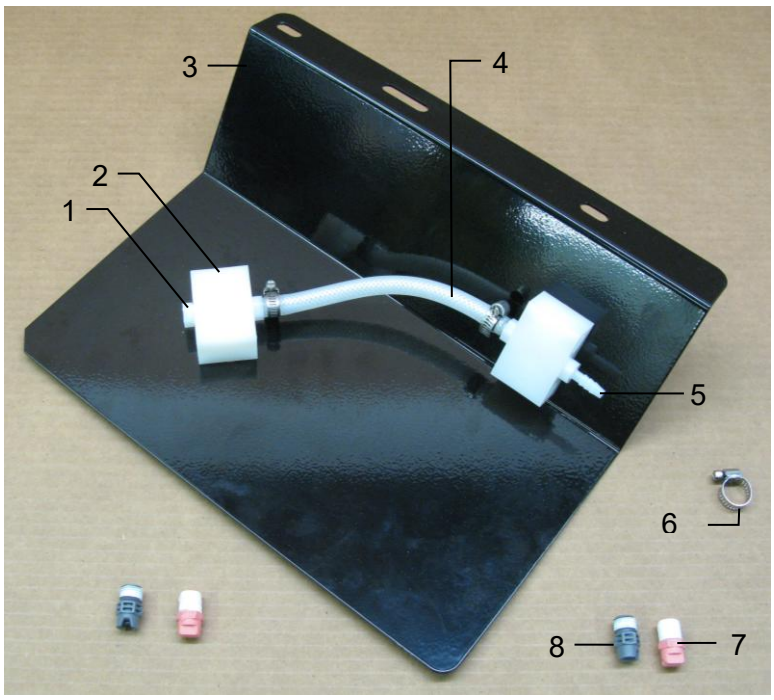

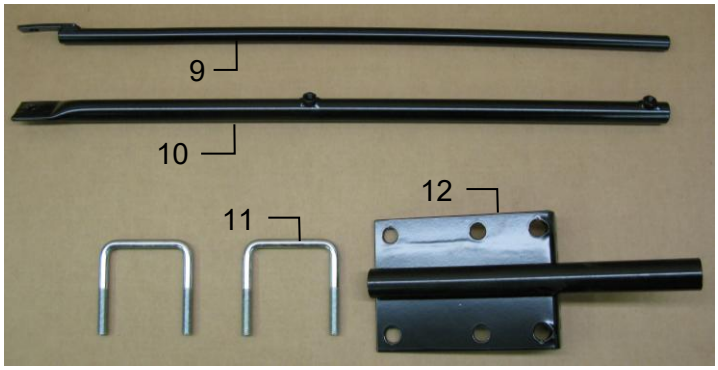

Ref	Description	Part #	Qty	Ref	Description	Part #	Qty
1	1/4" Hex Plug	003-F14	1	7	Tip* -Low Output	004-T6501-PT	2
2	Shield Manifold Block	001-4435NSB	2	8	Tip* -Std Output	004-T6504-PT	2
3	Nozzle Holder SS Block	001-4426A	1	9	Reach Rod – Outside	001-4404	1
4	1/4" Hose	002-9016	1	10	Reach Rode – Inside	001-4405	1
5	1/4" x 1/4" Straight Fitting	003-A1414	3	11	Base Bracket	001-4406	1
6	Mini Hose Clamp	003-9002	3	12	1/2" x 4” U-Bolt	001-4406A	2

* Tip color subject to change

Shield Only (Ref 1-8)	030-4410C-SO
Tank Mount Kit (Ref 9-12)	TMK-4401
Complete Assembly	**030-4410C**

4412C Installation Kit

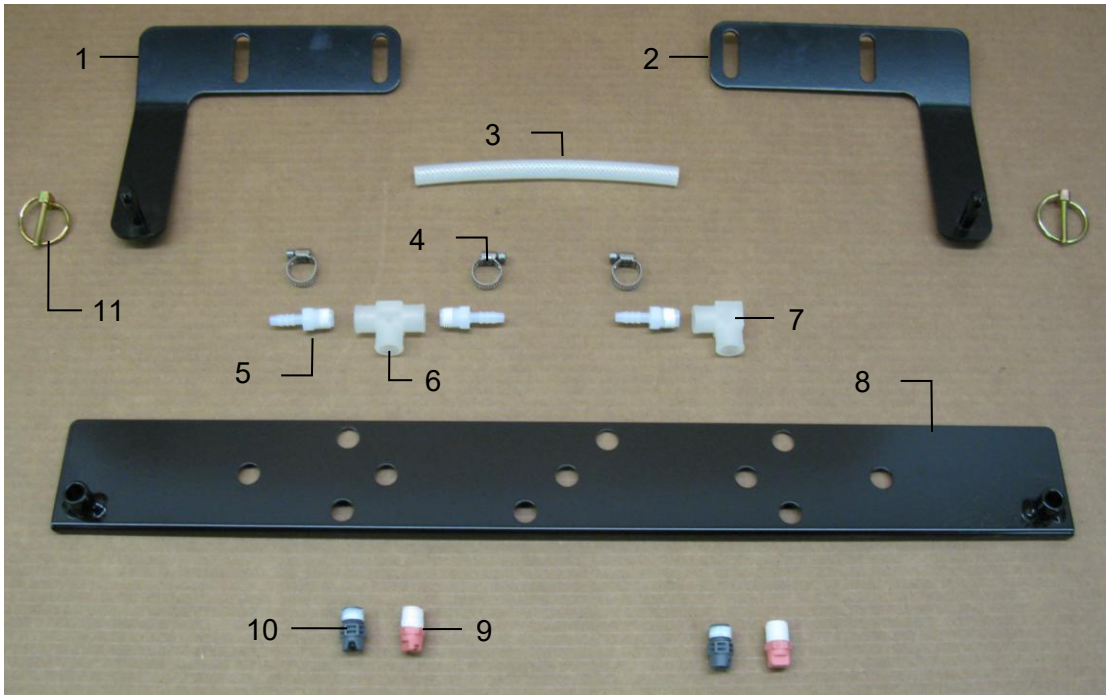

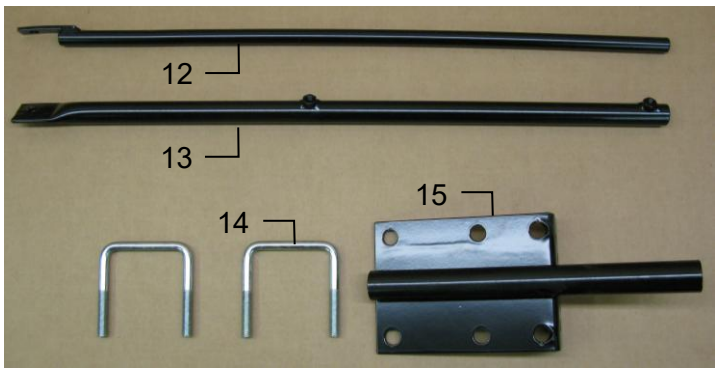

Ref	Description	Part #	Qty	Ref	Description	Part #	Qty
1	Left Mounting Bracket	001-4436DL	1	9	Tip* -Low Output	004-T6501-PT	2
2	Right Mounting Bracket	001-4436DR	1	10	Tip* -Std Output	004-T6504-PT	2
3	1/4" Hose	002-9016	1	11	3/16” Lynch Pin	008-4576	1
4	Mini Hose Clamp	003-9002	3	12	Reach Rod – Outside	001-4404	1
5	1/4" x 1/4" Straight Fitting	003-A1414	3	13	Reach Rode – Inside	001-4405	1
6	1/4" Sq Tee	003-TT14SQ	1	14	1/2" x 4” U-Bolt	001-4406A	2
7	1/4" Female St Elbow	003-SE14F	1	15	Base Bracket	001-4406	1
8	Tip Holder Spray Shield	001-4810	1				

Shield Only (Ref 1-11)	030-4412C-SO
Tank Mount Kit (Ref 12-15)	TMK-4401
Complete Assembly	**030-4412C**

* Tip color subject to change

4415C Installation Kit

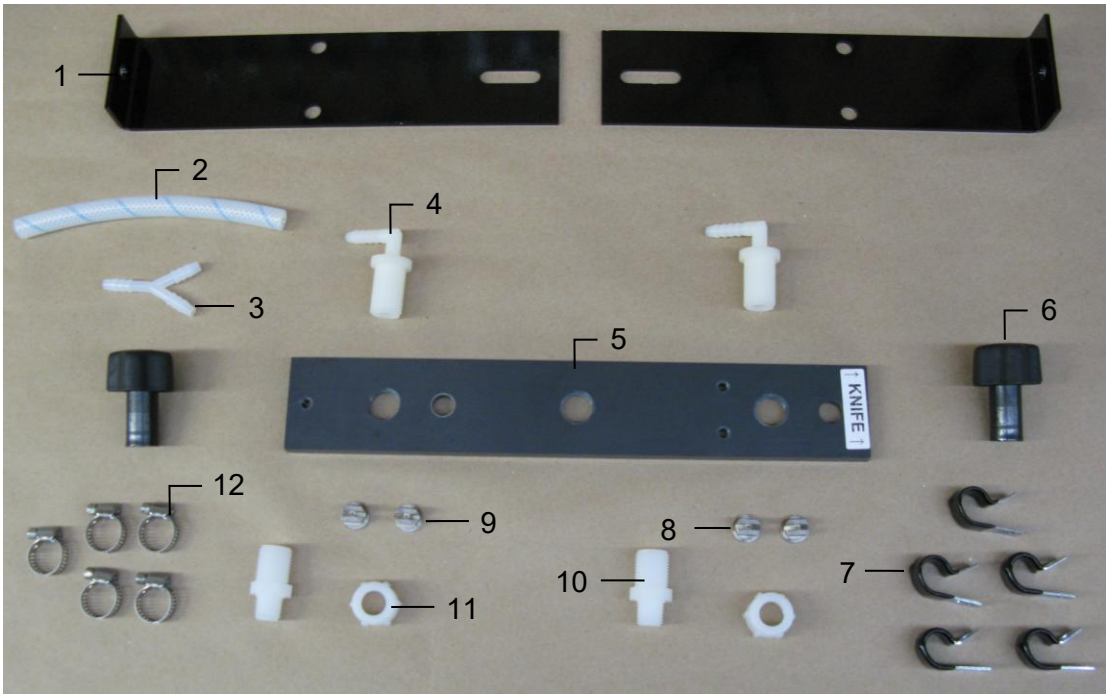

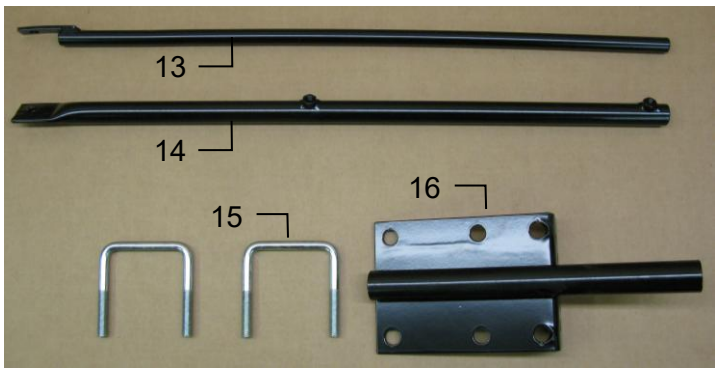

Ref	Description	Part #	Qty	Ref	Description	Part #	Qty
1	Hose Support	001-4425B	2	8	Tip* – Low Output	004-11001-SS	2
2	1/4" Hose	002-9016	3	9	Tip* – Std Output	004-11004-SS	2
3	Y Fitting	003-Y1414	1	10	1/4" Drill Guide	003-M3814NB	1
4	1/4" Nozzle Body Elbow	003-EL3814NB	2	11	Nozzle Cap	003-BC12	2
5	Hay Guard Shield	001-4425C	1	12	Mini Hose Clamp	003-9002	5
6	SS Manifold Knob	008-0925	2	13	Reach Rod – Outside	001-4404	1
7	477 Jiffy Clips	008-9014	5	14	Reach Rode – Inside	001-4405	1
				15	1/2" x 4” U-Bolt	001-4406A	2
				16	Base Bracket	001-4406	1

* Tip color subject to change

Shield Only (Ref 1-12)	030-4415C-SO
Tank Mount Kit (Ref 13-15)	TMK-4401
Complete Assembly	**030-4415C**

4416C Installation Kit
4416C-SO

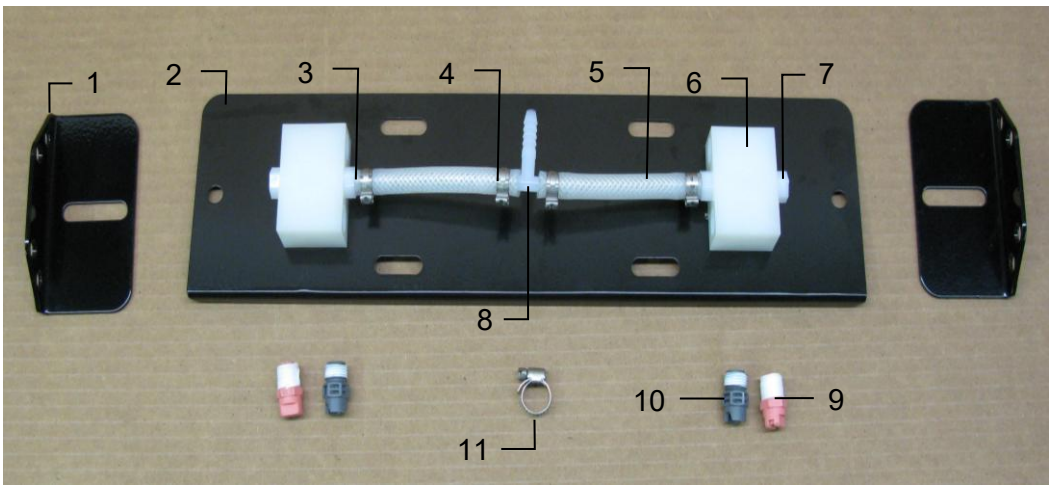

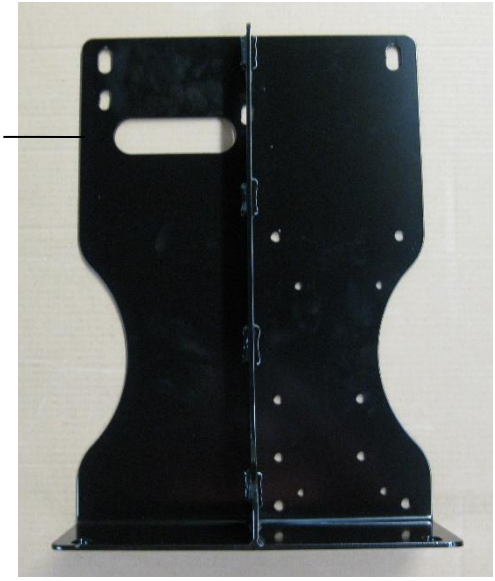

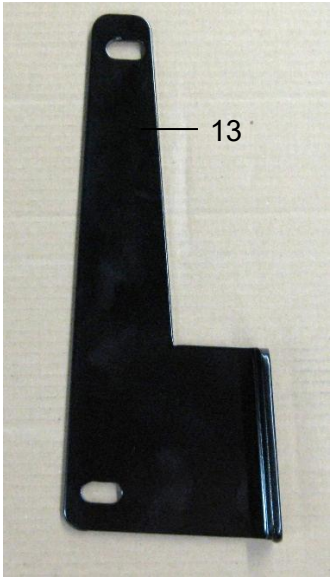

Ref	Description	Part #	Qty	Ref	Description	Part#	Qty
1	Spray Shield Holders	001-4424B	2	8	1/4" Tee	003-T1414	1
2	Spray Shield	001-4424A2	1	9	Tip* -Low Output	004-T6501-PT	2
3	1/4" Straight Fitting	003-A1414	2	10	Tip* -Std Output	004-T6504-PT	2
4	1/2” Otiker Clamp	003-9008	4	11	Mini Hose Clamps	003-9002	1
5	1/4" Hose	002-9016	1	12	Saddle Legs	001-4703Q	2
6	Manifold Block	001-4435NSB	2	13	Kicker Bracket	001-4703QC	1
7	Hex Plug	003-F14	2				

* Tip color subject to change

Shield Only (Ref 1-11)	030-4416C-SO
Tank Mount Kit (Ref 12-13)	TMK-4416
Complete Assembly	**030-4416C**

4417C Installation Kit

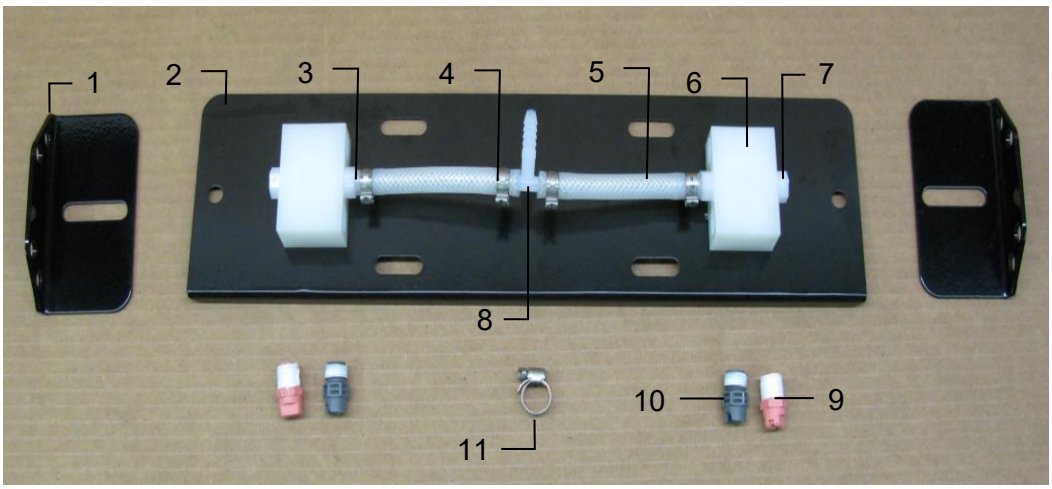

Ref	Description	Part #	Qty	Ref	Description	Part#	Qty
1	Spray Shield Holders	001-4424B	2	8	1/4" Tee	003-T1414	1
2	Spray Shield	001-4424A2	1	9	Tip* -Low Output	004-T6501-PT	2
3	1/4" Straight Fitting	003-A1414	2	10	Tip* -Std Output	004-T6504-PT	2
4	1/2” Otiker Clamp	003-9008	4	11	Mini Hose Clamps	003-9002	1
5	1/4" Hose	002-9016	1	12	Support Bracket	001-4703QU	2
6	Manifold Block	001-4435NSB	2	13	3-7/8” U-Bolt	001-4703QUX	2
7	Hex Plug	003-F14	2	14	2-7/8” U-Bolt	001-4703QUB	2

* Tip color subject to change

Shield Only (Ref 1-11)	030-4416C-SO
Tank Mount Kit (Ref 12-14)	030-0432SM-TK

4418C Installation Kit

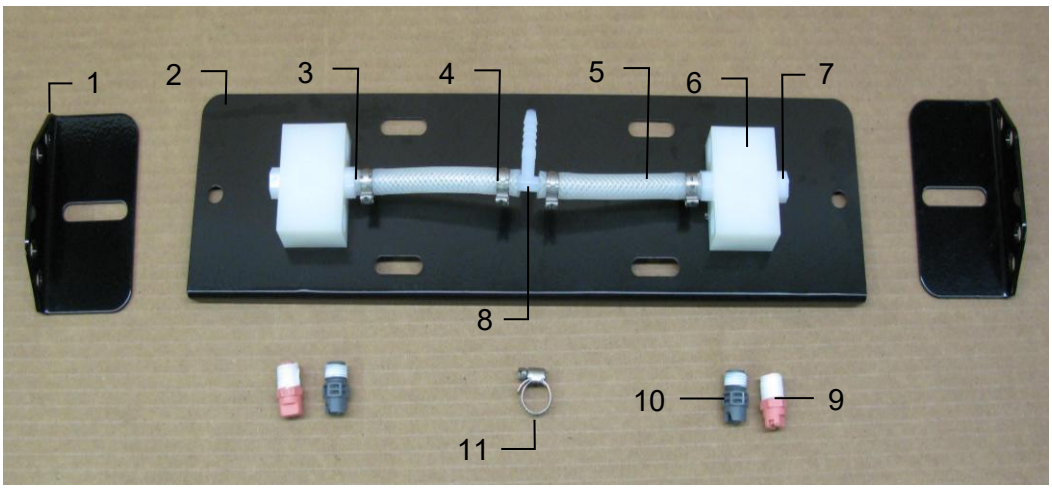

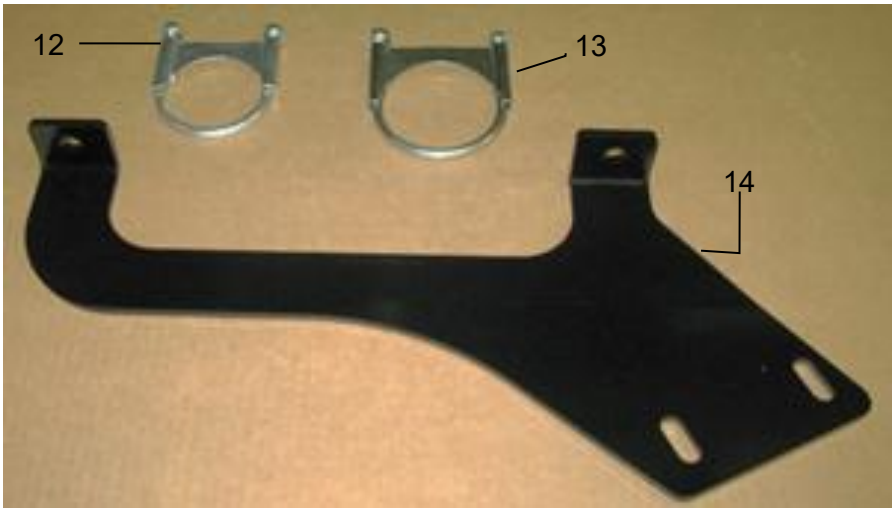

Ref	Description	Part #	Qty	Ref	Description	Part#	Qty
1	Spray Shield Holders	001-4424B	2	8	1/4" Tee	003-T1414	1
2	Spray Shield	001-4424A2	1	9	Tip* -Low Output	004-T6501-PT	2
3	1/4" Straight Fitting	003-A1414	2	10	Tip* -Std Output	004-T6504-PT	2
4	1/2” Otiker Clamp	003-9008	4	11	Mini Hose Clamps	003-9002	1
5	1/4" Hose	002-9016	1	12	2-7/8” U-Bolt	001-4703UB	1
6	Manifold Block	001-4435NSB	2	13	3-3/4” U-Bolt	001-4703QTB	2
7	Hex Plug	003-F14	2	14	Support Bracket	001-4703QT	2

* Tip color subject to change

Shield Only (Ref 1-11)	030-4416C-SO
Tank Mount Kit (Ref 12-14)	030-0432SM-TK-18

4485C Installation Kit

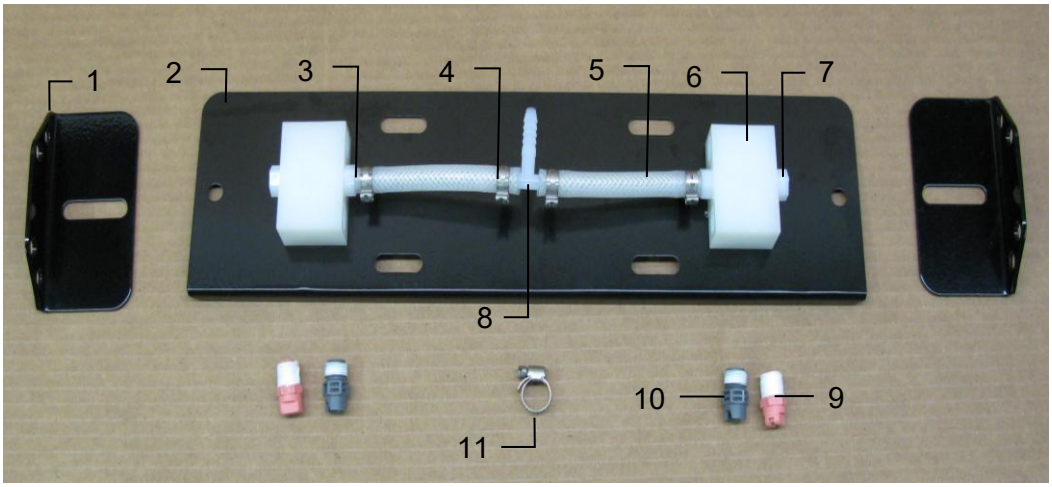

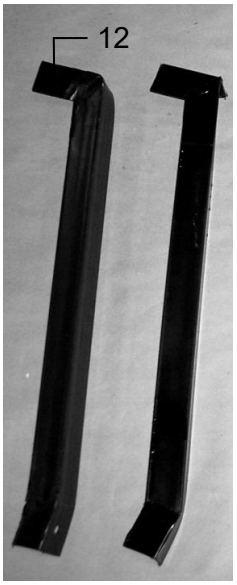

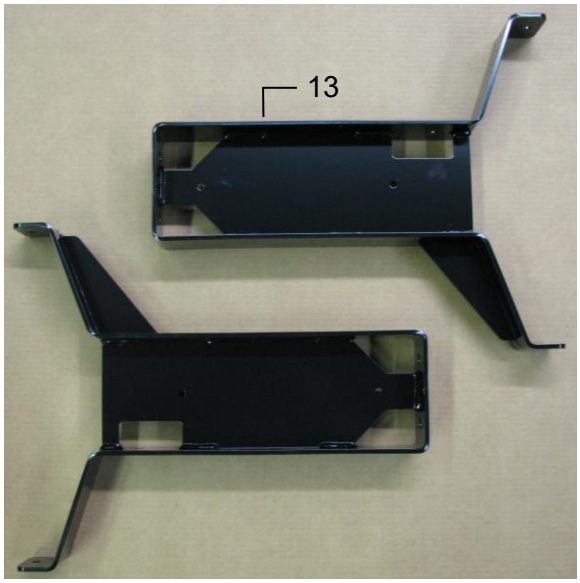

Ref	Description	Part #	Qty	Ref	Description	Part #	Qty
1	Spray Shield Holders	001-4424B	2	8	1/4" Tee	003-T1414	1
2	Spray Shield	001-4424A2	1	9	Tip* -Low Output	004-T6501-PT	2
3	1/4" Straight Fitting	003-A1414	2	10	Tip* -Std Output	004-T6504-PT	2
4	1/2” Otiker Clamp	003-9008	4	11	Mini Hose Clamps	003-9002	1
5	1/4" Hose	002-9016	1	12	Support Bracket	001-4424C	2
6	Manifold Block	001-4435NSB	2	13	55 Gal Long Leg	001-4703B	2
7	Hex Plug	003-F14	2				

* Tip color subject to change

Shield Only (Ref 1-11)	030-4416C-SO
Tank Mount Kit (Ref 12-13)	TMK-4485
Complete Assembly	**030-4485C**

4502C Installation Kit

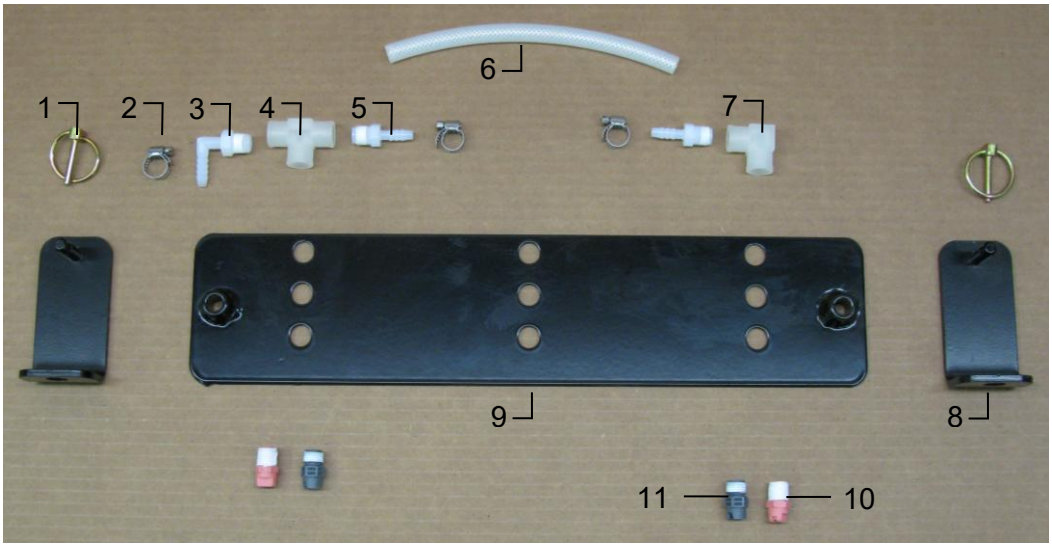

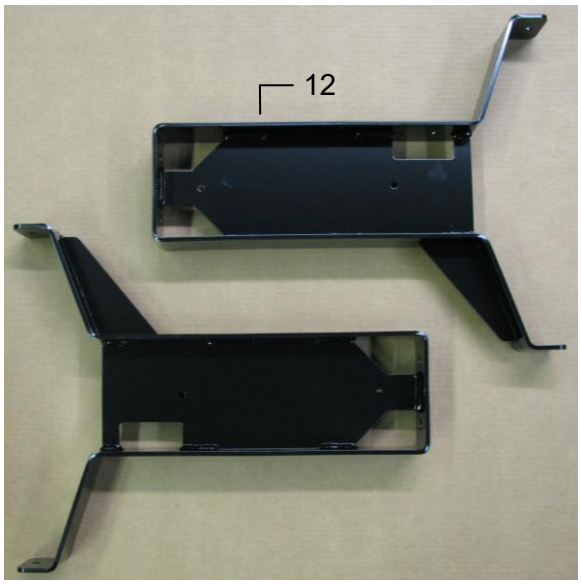

Ref	Description	Part #	Qty	Ref	Description	Part #	Qty
1	3/16” Lynch Pin	008-4576	2	8	Shield Holder	001-4703I	2
2	Mini Hose Clamp	003-9002	3	9	Spray Shield	001-4703G	1
3	1/4" x 1/4" Elbow	003-EL1414	1	10	Tip* -Low Output	004-T6501-PT	2
4	1/4" Tee Sq	003-TT14SQ	1	11	Tip* -Std Output	004-T6504-PT	2
5	1/4" x 1/4" Straight fitting	003-A1414	2	12	55 Gal Long Leg	001-4703B	2
6	1/4" Hose	002-9016	1				
7	1/4" Female Street Elbow	003-SE14F	1				

* Tip color subject to change

Shield Only (Ref 1-11)	030-4502C-SO
Tank Mount Kit (Ref 12)	TMK-4703B
Complete Assembly	**030-4502C**

4506C Installation Kit

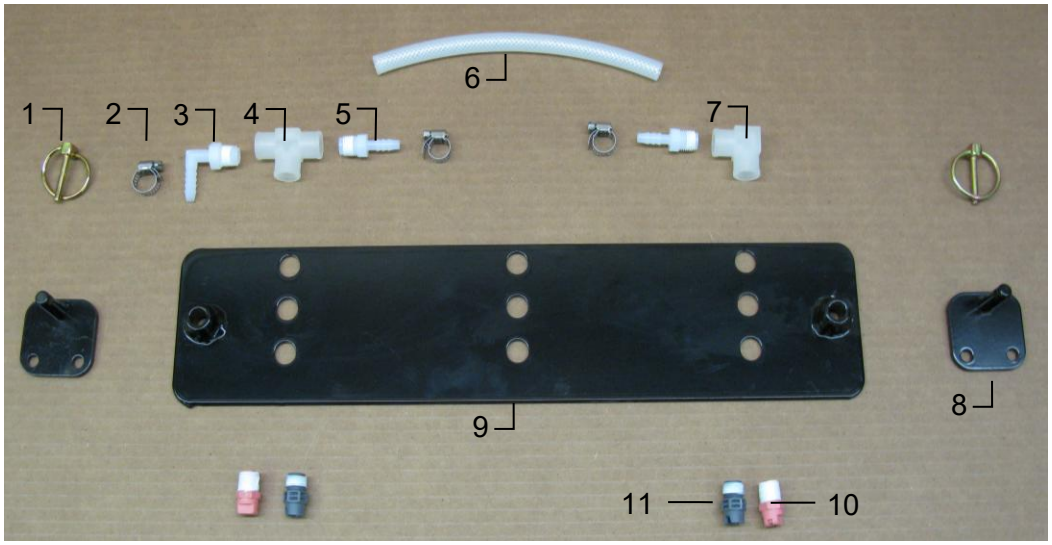

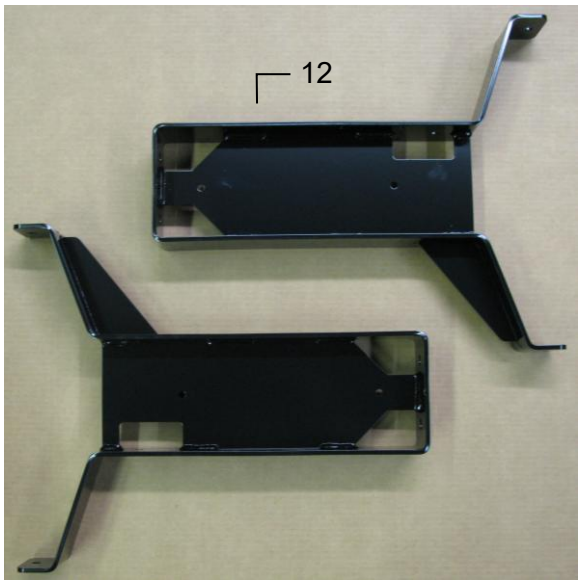

Ref	Description	Part #	Qty	Ref	Description	Part #	Qty
1	3/16” Lynch Pin	008-4576	2	8	Shield Holder	001-4703H	2
2	Mini Hose Clamp	003-9002	3	9	Spray Shield	001-4703G	1
3	1/4" x 1/4" Elbow	003-EL1414	1	10	Tip* -Lo Output	004-T6501-PT	2
4	1/4" Tee Sq	003-TT14SQ	1	11	Tip* -Std Output	004-T6504-PT	2
5	1/4" x 1/4" Straight fitting	003-A1414	2	12	55 Gal Long Leg	001-4703B	2
6	1/4" Hose	002-9016	1				
7	1/4" Female Street Elbow	003-SE14F	1				

* Tip color subject to change

Shield Only (Ref 1-11)	030-4506C-SO
Tank Mount Kit (Ref 12-15)	TMK-4703B
Complete Assembly	**030-4506C**

4507C Installation Kit

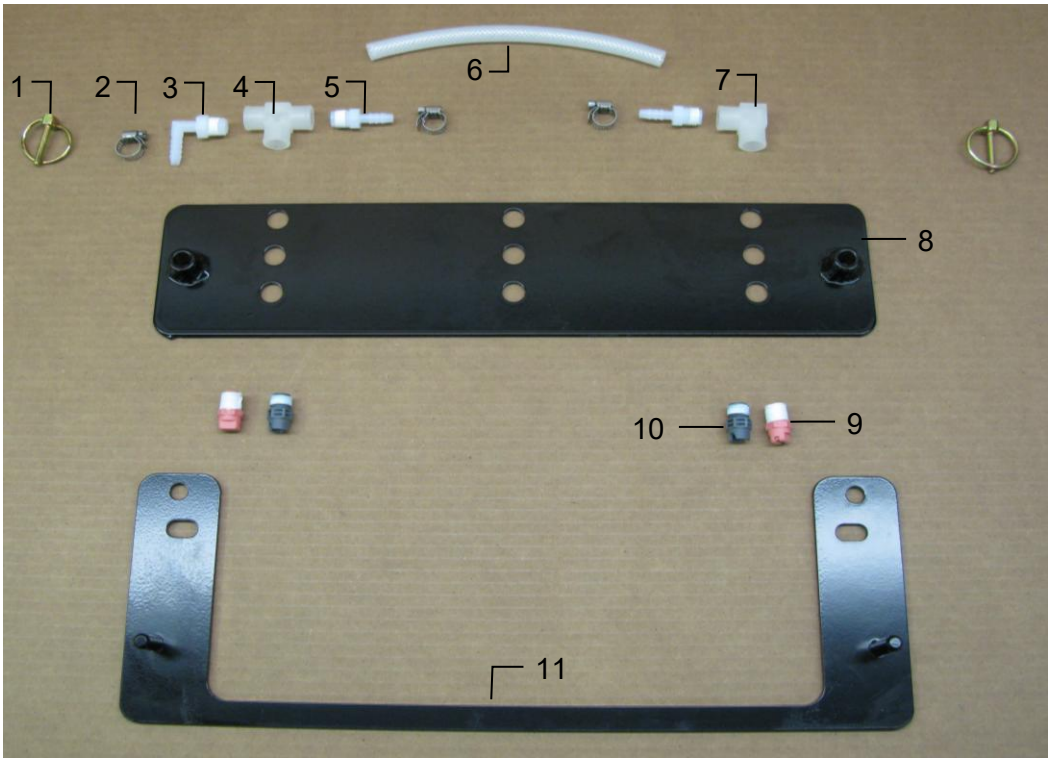

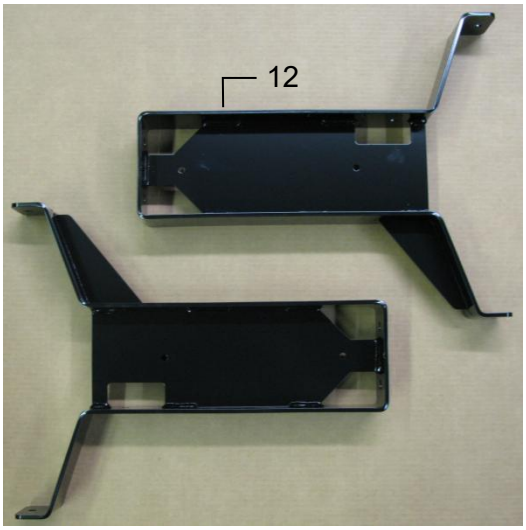

Ref	Description	Part #	Qty	Ref	Description	Part #	Qty
1	Lynch Pin	008-4576	2	8	Spray Shield	001-4703G	1
2	Mini Hose Clamp	003-9002	3	9	Tip* -Low Output	004-T6501-PT	2
3	1/4" x 1/4" Elbow	003-EL1414	1	10	Tip* -Std Output	004-T6504-PT	2
4	1/4" Tee Sq	003-TT14SQ	1	11	Shield Holder	001-4703J	2
5	1/4" x 1/4" Straight Fitting	003-A1414	2	12	55 Gal Long Leg	001-4703B	2
6	1/4" Hose	002-9016	1				
7	1/4" Female Street Elbow	003-SE14F	1				

* Tip color subject to change

Shield Only (Ref 1-11)	030-4507C-SO
Tank Mount Kit (Ref 12)	TMK-4703B
Complete Assembly	**030-4507C**

Harvest Tec LLC. Warranty and Liability Agreement

Harvest Tec, LLC. will repair or replace components that are found to be defective within 12 months from the date of manufacture. Under no circumstances does this warranty cover any components which in the opinion of Harvest Tec, LLC. have been subjected to negligent use, misuse, alteration, accident, or if repairs have been made with parts other than those manufactured and obtainable from Harvest Tec, LLC.

Our obligation under this warranty is limited to repairing or replacing free of charge to the original purchaser any part that in our judgment shows evidence of defective or improper workmanship, provided the part is returned to Harvest Tec, LLC. within 30 days of the failure. If it is determined that a non-Harvest Tec manufactured product has been used inside the Harvest Tec applicator system where the failure occurred, then Harvest Tec reserves the right to deny the warranty request at their discretion. Parts must be returned through the selling dealer and distributor, transportation charges prepaid.

This warranty shall not be interpreted to render Harvest Tec, LLC. liable for injury or damages of any kind, direct, consequential, or contingent, to persons or property. Furthermore, this warranty does not extend to loss of crop, losses caused by delays or any expense prospective profits or for any other reason. Harvest Tec, LLC. shall not be liable for any recovery greater in amount than the cost or repair of defects in workmanship.

There are no warranties, either expressed or implied, of merchantability or fitness for particular purpose intended or fitness for any other reason. This warranty cannot guarantee that existing conditions beyond the control of Harvest Tec, LLC. will not affect our ability to obtain materials or manufacture necessary replacement parts.

Harvest Tec, LLC. reserves the right to make design changes, improve design, or change specifications, at any time without any contingent obligation to purchasers of machines and parts previously sold.

Revised 1/24

HARVEST TEC, LLC.
P.O. BOX 63
2821 HARVEY STREET
HUDSON, WI 54016 USA
PHONE: 715-386-9100
FAX: 715-381-1792
Email: info@harvesttec.com