# Installation Manual

## *Model 731, 746, 747, & 749*

### *Preservative Applicator Systems for Round Balers*

HarvestTec®

EST. 1976

731-746-747-749-26-INST
**9/26**

# Harvest Tec 731-746-747-749 Installation Table of Contents


| | Page |
|---|---|
| **Introduction** | **2** |
| **Model Reference** | **3-4** |
| **Tools Needed** | **4** |
| **Installation of Applicator** | **5-60** |
| Tank Base Kits | 5-27 |
| Model 731 – Square 20 gal Tank Kit Breakdown | 5 |
| Specific Install Kit Instructions | 6 |
| Model 746 – Round 25 gal Tank Kit Breakdown | 7 |
| Specific Install Kit Instructions | 7-9 |
| Model 747 – Round 25 or 55 Tank Kit Breakdowns | 10 |
| Specific Install Kit Instructions | 11 |
| Model 749 – Round 55 gal Tank Kit Breakdown | 12 |
| Specific Install Kit Instructions | 13-27 |
| Drain Fill Line Tank Kit | 28 |
| Parts Bag Packages and Hosing | 28 |
| Pump Plate Manifold | 29 |
| Installation | 30 |
| Spray Shield Assembly | 31-41 |
| Specific Install Kit Instructions | 31-41 |
| Plumbing, Solenoid and Tip Outputs | 42-43 |
| Optional High Output Tip Kit | 44-46 |
| Moisture Sensors | 47-57 |
| Moisture Sensor Installation Reference Chart | 48 |
| Specific Installation Instructions | 49-57 |
| End of Bale Sensor | 58 |
| Main Wire Harness and Connections | 59 |
| Tractor Setup | 60 |
| Display Options | 61-64 |
| Optional HT VT Display Kit | 62 |
| Optional Android Tablet Display Kit | 63 |
| Optional iPad Mini Display Kit | 63 |
| Optional ISO Display Adapter | 64 |
| **Wiring Diagram** | **65** |
| **Pin Outs** | **66-68** |
| **Install Kit Parts Breakdowns** | **69-90** |
| **Warranty Statement** | **91** |


## Introduction

Congratulations and thank you for purchasing a Harvest Tec Model 700 Series Automatic Preservative Applicator system. Read this manual carefully to ensure correct steps are followed to attach the applicator to the baler. This applicator is designed to apply Harvest Tec buffered propionic acid. **Use of alternative products may cause complications and voids warranty.** Complications may include inaccurate readings from the flow meter and damage to system components.

Harvest Tec applicators can be installed on many baler models when using the proper tank model number and installation kit. Before installing on your baler, make sure you have the proper model & installation kit. Please contact your local authorized dealer or Harvest Tec directly for specifications if you are unsure about the correct installation kit for your baler model.

Left and Right sides are determined by facing in the direction of forward travel.

# Model Reference – for Round Balers

## Automatic Applicator Systems

| Baler Make | Baler Model | Base Kit | Tank Size | Install Kit | MC% Install |
|---|---|---|---|---|---|
| AGCO | 5134, 5415, 550 | 746 | 25gal | 4484X | B |
| | (5446, 5456, 5545, 5545 Standard and Silage) (2745, 2746, 2746A, 2756A, 2766) | 749 | 55gal | 4508X | E |
| | 2846, 2846A, 2856, 2856A, 2946, 2946A, 2956, 2956A | 749 | 55gal | 4524X | F |
| Case IH | (8400 Series); RB444, RBX 442, 443, 451, 461, 561 | 746 | 25gal | 4484X | B |
| | RB 454,464, RBX 452, 453, 462, 463 | 747 | 25gal | 747-SO | B |
| | RB 554, 564, RBX 552, 553, 562, 563, 564 | 747 | 55gal | 747-SO | B |
| | RB 455, 465, 560, 565 | 747C | 55gal | 747C | A |
| | RB455A Utility Baler | 747U | 25gal | 747U | B |
| | RB456, 466 HD Pro Models | 747P | 55gal | 747P | A |
| | Utility Plus Baler | 747UP | 25gal | 747UP | B |
| Challenger | RB 34, 44, 45, 452 | 746 | 25gal | 4484X | B |
| | RB 46, 56 | 749 | 55gal | 4508X | E |
| | RB 453, 453A, 463, 463A, 563, 563A, RB56C, RB56CA | 749 | | 4524X | F |
| Claas | Rollant Fixed Chamber, Variant Balers | 746 | 25gal | 4484X | B |
| Hesston | (500 Series: 530, 540, 545, 550, 555S, 555T, 560, 565A, 565T) (700 Series - 730, 740, 745); (5400, 5500, 5600, 5800 Series Fixed Chamber) (814 Fixed Chamber) | 746 | 25gal | 4484X | B |
| | (800 Series - 845, 846A, 855, 856); (900 Series - 946, 955, 956) | 749 | 55gal | 4508X | E |
| John Deere | 430, 510, 530 | 746 | 25gal | 4484X | B |
| | (435, 455, 465, 535, 545, 565); (446, 456, 466, 546, 566) (447, 457, 467, 547, 557, 567) | 746 | 25gal | 4483X | C |
| | | 749 | 55gal | 4504X | |
| | (448, 458, 468, 558, 568); (449, 459, 459E, 469, 559, 569) (440, 450, 460, 550, 560); (451E, 451M, 461M, 551M, 561M) | 746 | 25gal | 4516X | C |
| | | 749 | 55gal | 4517X | |
| | (440, 450, 460, 550, 560) w/HC2; 451R, 461R, 561R | 746 | 25gal | 4546X | C |
| | | 749 | 55gal | 4547X | |
| | (960, 990); C451R, C461R, V451R, V461R | 749 | 55gal | 4538X | G |
| | (582 Silage Special); 854 | 749 | | 4503X | D |
| Krone | (Round Pack Fixed Chamber 1250, 1250 Multi-Cut, 1550, 1550 Multi-Cut); (KR 125, F130); (Vario Pack, Fortima, Comprima, Bellima Series) | 746 | 25gal | 4484X | B |
| Kubota | BV4160, BV4180, BV4580, BV5160 | 746 | 25gal | 4481X | A |
| Kuhn | VB 5600 | 736K | 20gal | 736K | B |
| | VB 2100 Series | 737 | | 737 | B |
| | VB 3100 Series | 738K | | 738K | A |
| | VB 7100 Series | 739K | | 739K | B |
| McHale | V660, F540, F550, F560, Fusion Balers | | | 4526X | A |
| Massey Ferguson | 1734, 1745, 1746, 1756 | 746 | 25gal | 4484X | B |
| | 2745, 2746, 2746A, 2756A, 2766 | 749 | 55gal | 4508X | E |
| | 2846, 2846A, 2856, 2856A, 2946, 2946A, 2956, 2956A | 749 | | 4524X | F |
| | RB4100V | 731 | 20gal | 4523X | B |
| | 1 Series -145, 156 | 749 | 55gal | 4531X | H |

**(Chart Continues on Next Page)**

## <u>Model Reference</u> – for Round Balers (continued)

### Automatic Applicator Systems

| Baler Make | Baler Model | Base Kit | Tank Size | Install Kit | MC% Install |
|---|---|---|---|---|---|
| New Holland | 544, 548, 564, 630, 634, 638 | 746 | 25gal | 4484X | **B** |
| | 640, 644, 648, 650, 658, 660, 664, 668, 678, 688 | 746 | | 4486X | **B** |
| | BR 7060, 7070 | 747 | 25gal | 747-SO | **B** |
| | (BR 7080, 7090); (BR 770, 770A, 780, 780A) | 747 | 55gal | 747-SO | **B** |
| | BR 730, 730A, 7050 | 746 | 25gal | 4484X | **B** |
| | BR 740, 740A, 750, 750A | 747 | 25gal | 747-SO | **B** |
| | Roll Belt 450, 460, 550, 560, 565 | 747C | 55gal | 747C | **A** |
| | BR 450 Utility Baler | 747U | 25gal | 747U | **B** |
| | Pro Belt 450, 460 | 747P | 55gal | 747P | **A** |
| | Roll Belt 450 Utility Plus | 747UP | 25gal | 747UP | **B** |
| | RF 440, 450 Fixed Chamber | 746 | 25gal | 4482X | **C** |
| New Idea | (4800 Series Fixed); (6343, 6344, 6345, 6364, 6365); (6454, 6464, 6465) | 746 | 25gal | 4484X | **B** |
| | | 749 | 55gal | 4508X | |
| Vermeer | (404, 504) Series 1 Pro | 749 | 55gal | 4523X | **B** |
| | (504, 604) Series 2 Pro | 731 | 25gal | 731 | **B** |
| | (504 Gen 3 & 4); (604 Series 3 & 4 Pro) | 749 | 55gal | 4543X | **B** |
| | 504, 505 (J, K, M, N, Series), Rebel Series, XL Series | 746 | 25gal | 4484X | **B** |
| | 504R Premium, Classic & Signature | 749 | 55gal | 4555X | **B** |
| | 604M. 605M, 604N, 605N | 749 | | 4505X | **B** |
| | 604R Premium, Classic & Signature | 749 | | 4549X | **B** |
| | ZR5 Self-Propelled Baler | 735Z | | 735Z | **I** |
| Vicon | RF Fixed Chamber 119, 2121, 2125, 2235, RV 1601, 1901, 2160, 2190 | 746 | 25gal | 4484X | **B** |
| Welger | RP Fixed Chamber 202, 220, 235, 245, 415, 420, 445, 520, 535 | 746 | 25gal | 4484X | **B** |

## <u>Tools Needed</u>

| | | | |
|---|---|---|---|
| Standard wrench set | Side cutter & Hose | SAE sock set | Hammer |
| Standard screw driver or 5/16” nut driver | Crescent wrench | Drill bit set | Center punch |

# Model 731, 431 Base Kits

## 20gal.Tank Saddle Kit (030-0431-TK)

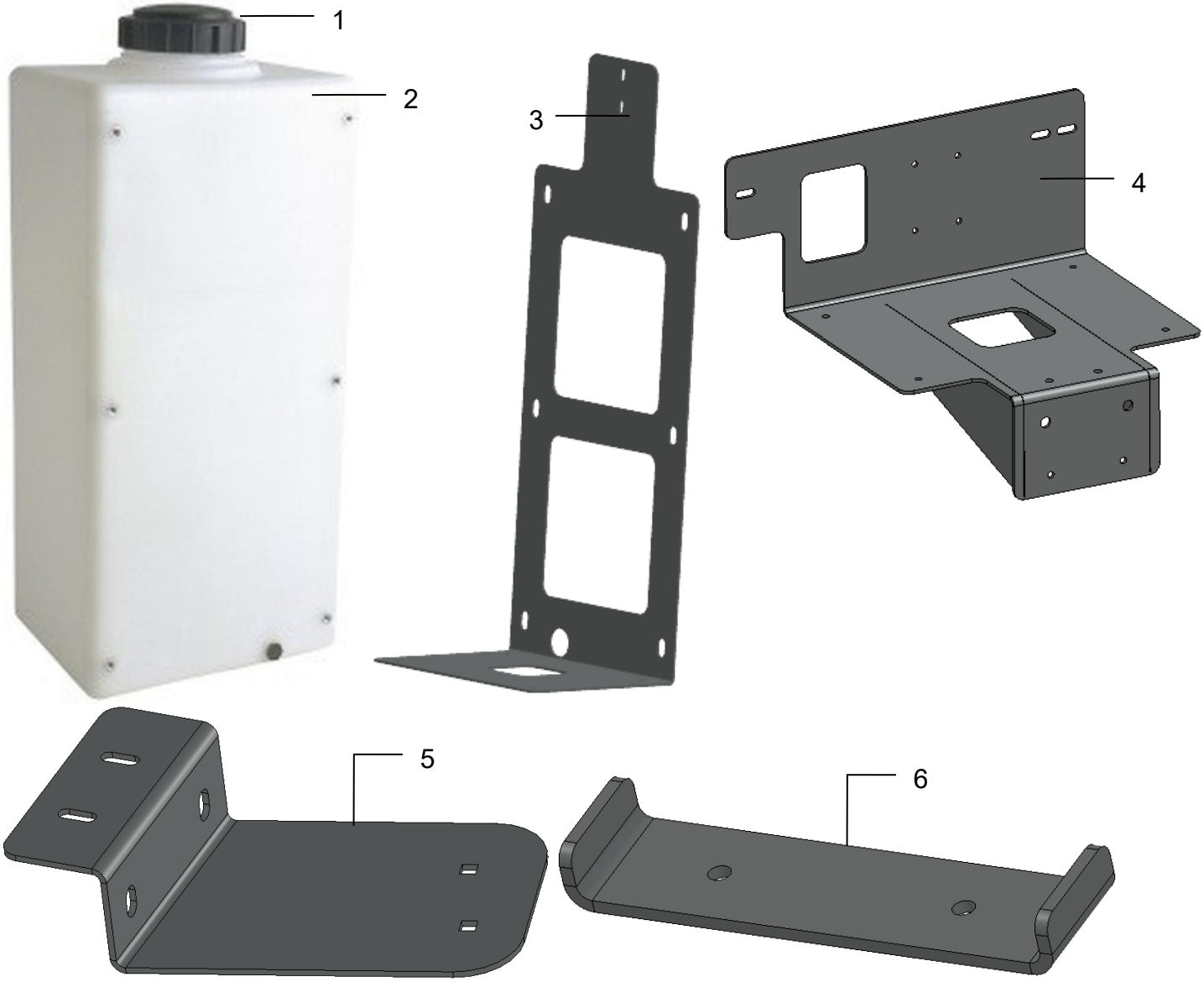


| Ref | Description | Part # | Qty | Ref | Description | Part # | Qty |
|---|---|---|---|---|---|---|---|
| 1 | Tank Cap | 005-9022C | 1 | 8 | Inside Reach Rod | 001-4405 | 2 |
| 2 | 20 Gallon Tank | 005-4705T | 1 | NP | 3/4" Tank Fitting | 005-9100 | 2 |
| 3 | 20 Gal Tank Bracket | 001-4705A | 1 | NP | 3/4" Street Fitting | 003-SE34 | 1 |
| 4 | 20 Gal Tank Frame | 001-4705B | 1 | NP | 3/4" x 3/4" Elbow | 003-EL3434 | 1 |
| 5 | 20 Gal Platform Bracket | 001-4705C | 1 | NP | Cap Gasket (included) | 005-9022CG | 1 |
| 6 | 20 Gal Platform Standoff | 001-4705D | 1 | NP | U-Bolt - Small | 001-4714UBS | 1 |
| 7 | Outside Reach Rod | 001-4404 | 2 | | | | |

**Complete Tank Saddle Kit** **030-0431-TK**

## Installation - Tank Saddle Kit (030-0431-TK) for Install Kits 4531X & 4531

**Tank and Tank Mounting Brackets-** On the front platform of the baler, mark the holes as indicated (Fig 1). Locate platform bracket (001- 4705C) and position on the top of the platform as shown (Figure 2). Using the bracket as a template to mark the location, drill two 5/16" (8mm) holes in the front of the platform and the top of the platform using the dimensions shown. Using the carriage bolts and washers in parts bag 19 loosely secure the two back mounting holes as indicated by the arrow (Figure 2).

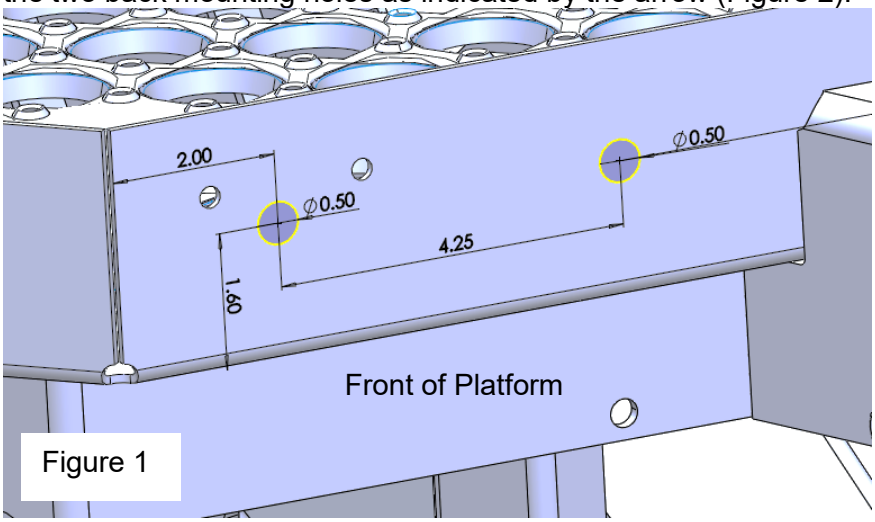

Figure 1

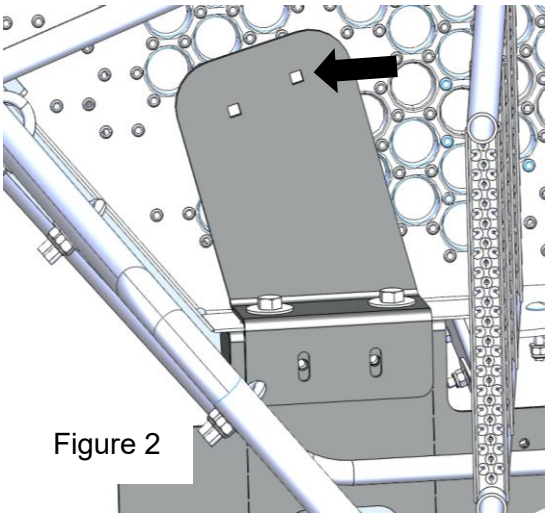
Figure 2

Locate the tank mounting frame (001-4705B) and the support plate (001-4705D) and position as shown in figure 3. The arrow indicates the position of the support plate secure with 1/2" bolts. *Note: The tank mounting frame bracket will be secured to the tank bracket (001-4705A) and the tank (005-4705T) for shipping. Tank may need to be removed to install bolts to mount pump assembly.

Use 3/8" bolts to secure the mounting frame to the platform bracket on the top, as well as bottom of the frame. Be sure the bolt goes through the front of the platform and the platform bracket shown (Figure 4).

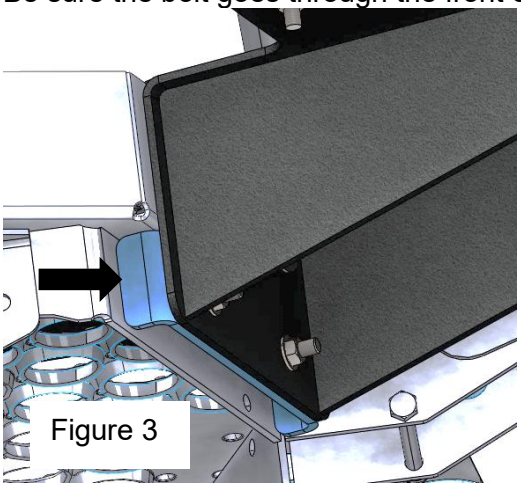
Figure 3

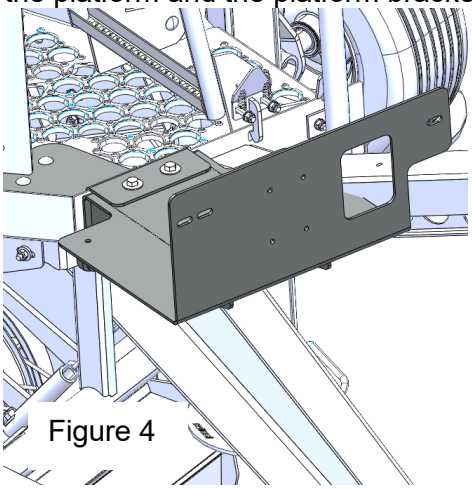
Figure 4

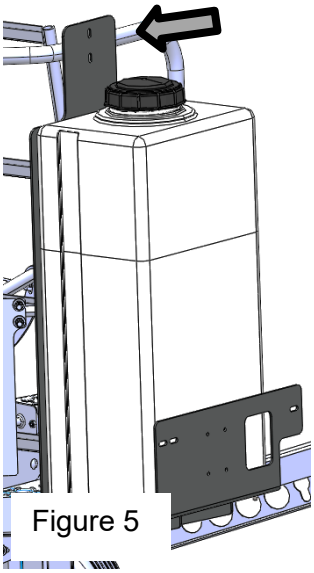
Figure 5

Secure the tank frame bracket (001-4705A) to the platform safety rail with the supplied U-Bolt (001-4714UBS) indicated by the arrow in figure 5.

**Reach Rods-** For added tank stability, attach and secure telescoping reach rods. Reach rod placement is at the discretion of the installer to determine the most suitable baler attachment points. Bolt one end of each reach rod to the upper tank support bracket and the other ends to secure locations on the baler. Reach rods tabs may have to be bent to align properly. Once final rod lengths are determined, remove the set screw bolts and mark inner reach rods through the set screw bolt hole. Unbolt and remove inner reach rods - using a 3/8" bit drill approximately 1/4" deep into the inner reach rods at your mark to create a stop for the set screw bolt to embed into. Reassemble the telescoping reach rods and tighten set screw bolt. Secure all reach rod hardware with nuts, washers and lock washers included with hardware.

# Model 746 and 441 Base Kits
## 25 gal. Tank Saddle Kit (030-0441-TK)

| Ref | Description | Part # | Qty |
|---|---|---|---|
| 1 | Complete Tank Cap | 005-9022C | 1 |
| | Tank Cap Gasket | 005-9022CG | 1 |
| | Tank Cap Breather | 005-9022B5 | 1 |
| 2 | Tank Strap | 001-4402 | 2 |
| 3 | Stub Pipe | 001-4403 | 1 |
| 4 | Tank* | 005-9022 | 1 |
| 5 | Tank Saddle | 001-4401 | 1 |
| 6 | Pump Plate Mtg. Brkt. | 001-4647 | 1 |
| NP | 3/4" Tank Fitting | 005-9100 | 1 |

*Includes Bottom Tank Fitting Only

**Complete Tank Saddle Kit 030-0441-TK**

Tank Saddle Kit (030-0441-TK) is a versatile tank kit that may be mounted to a variety of different baler makes and models when properly paired with the install kit designed for the baler. Reference the applicator Install Kit number in the following pages for the mounting instructions to attach the tank kit to your baler model.

# Install Kit 4481X or 4481
## Installation of Tank Saddle Kit (030-0441-TK)

Using the one pre-drilled holes next to the baler jack on top of the baler tongue, mount one side support leg (001-4704MAK). Drill second hole to align with support leg hole. Both holes will need to be drilled out to have a 9/16” diameter. Secure with 1/2" x 1 1/2" bolts, pre-drilled holes will need to be drilled out to have a 9/16” (14mm) diameter. Repeat process on opposite side of baler tongue as shown in figure 1. After side supports are secured, mount top tank support (001-4704MK) as show in figure 2 using three 1/2" x 1 1/2" bolts per side. Mount tank saddle (001-4401) using three 1/2" x 1 1/2" bolts onto top support as show in figure 3.

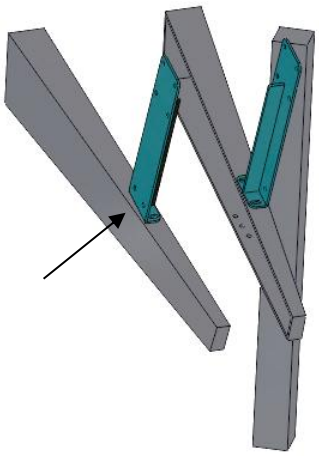

Figure 1

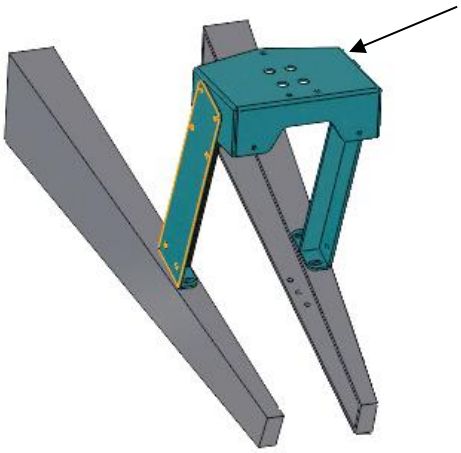

Figure 2

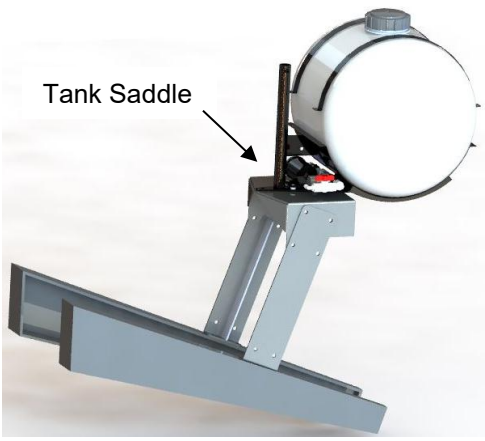


Figure 3

# Install Kit 4482X or 4482

## Installation of Tank Saddle Kit (030-0441-TK)

Locate the tank mounting legs (001-4704MAK) the top support bracket (001-4704MRF) the front mount plate (001-4703VZ) and assemble (Figure 4) using the supplied hardware. Point the assembled bracket with the 001-4703VZ toward the baler. Move the tank legs toward the baler until the width of the tongue matches the width of the legs (shown in Figure 5). Ensure the assembly is positioned upright, drill the holes and secure. Attach the tank saddle to the assembly (Figure 6). Secure the tank to the tank saddle by using the two supplied tank straps and hardware.

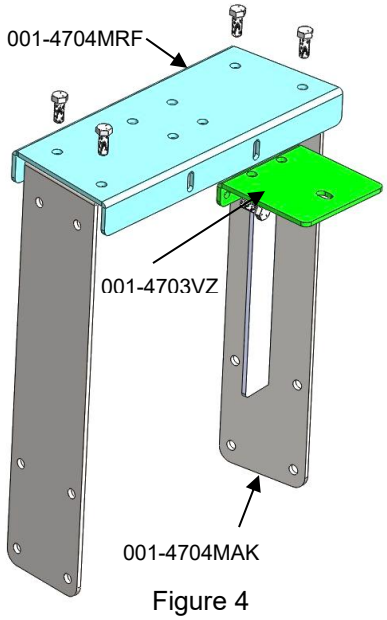


Figure 4
*Reversed View

Figure 5

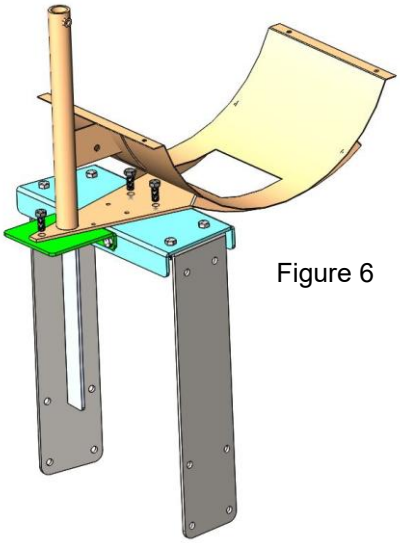

Figure 6

# Install Kits 4483X, 4516X, 4546X or 4483, 4516, 4546

## Installation of Tank Saddle Kit (030-0441-TK)

The Mounting Bracket (001-4411) will straddle the baler's tongue, resting up against the tongue's intersection with the baler's cross frame (for 8 Series and older). Bracket is bolted to the baler using three bolts on each side, holding the tongue to the cross frame. Replace each of these bolts with the longer bolts provided (for 9, 0 and 1 Series only two bolts per side are used). Tank mounting bracket may flex when tightening down bolts because some hitches are welded at different angles. Install the tank on top of the stub pipe and secure tank saddle using supplied 1/2" x 1-1/2" hardware. Bracket Support (001-4411A) attaches to the bottom of tank saddle and to the front of the mounting bracket. Tighten down and secure all hardware.

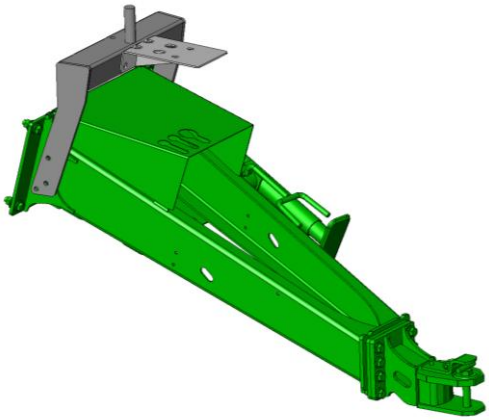

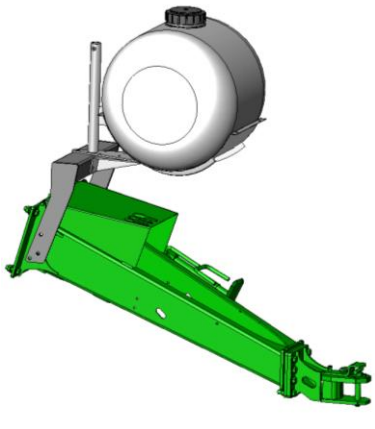

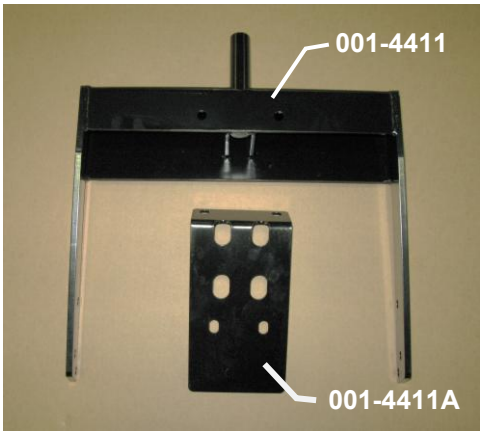

# Install Kit 4484X or 4484

## Installation of Tank Saddle Kit (030-0441-TK)

### Requires Tank Mount Kit (TMK-4484)

Locate and place the Base Mounting Bracket (001-4418) on the baler's tongue or cross frame. Care must be taken to make sure the applicator will be clear of the baler's moving parts and the rear wheels of the tractor. Line up the bracket with any existing holes, drill new if necessary. The bracket will be secured with four 1/2" bolts. Mount the tank on top of the stub pipe. Secure with the 1/2" x 1-1/2" bolt and hardware. Attach the reach rods from the top of the stub pipe to the baler forming a 'V' or triangle shape.

**Reach Rods Installation –** Reach Rod placement is at the discretion of the installer to determine the most suitable baler attachment points. Bolt one end of each reach rod to the upper stub pipe and the other ends to secure locations on the baler.
Reach rods tabs may have to be bent to align properly. Once final rod lengths are determined, remove the set screw bolts and mark inner reach rods through the set screw bolt hole. Unbolt and remove inner reach rods - using a 3/8" bit drill approximately 1/4" deep into the inner reach rods at your mark to create a stop for the set screw bolt to embed into. Reassemble the telescoping reach rods and tighten set screw bolt. Secure all reach rod hardware with nuts, washers and lock washers included with hardware.

# Install Kit 4486X or 4486

## Installation of Tank Saddle Kit (030-0441-TK)

### Requires Tank Mount Kit (TMK-4484)

Locate and place the Mounting Bracket (001-4420) on the front of the baler's tongue where it joins the hitch acceptor. Use the bolts 5/8" included to join the two parts of the baler. Orient the bracket so the two holes on top of the bracket will face away from the baler to allow the applicator to face rearward. Install the tank on top of the mounting bracket using two 1/2" x 1-1/2" bolts and hardware. Tank will face towards the baler when installation is complete. Attach the reach rods from the top of the stub pipe to the baler forming a 'V' or triangle shape.

**Reach Rods Installation -** Reach Rod placement is at the discretion of the installer to determine the most suitable baler attachment points. Bolt one end of each reach rod to the upper stub pipe and the other ends to secure locations on the baler.
Reach rods tabs may have to be bent to align properly. Once final rod lengths are determined, remove the set screw bolts and mark inner reach rods through the set screw bolt hole. Unbolt and remove inner reach rods - using a 3/8" bit drill approximately 1/4" deep into the inner reach rods at your mark to create a stop for the set screw bolt to embed into. Reassemble the telescoping reach rods and tighten set screw bolt. Secure all reach rod hardware with nuts, washers and lock washers included with hardware.

# Model 747 and 442 Base Kits
## 25 gal. Tank Saddle Kit (030-044225-TK)
## 55 gal. Tank Saddle Kit (030-044255-TK)

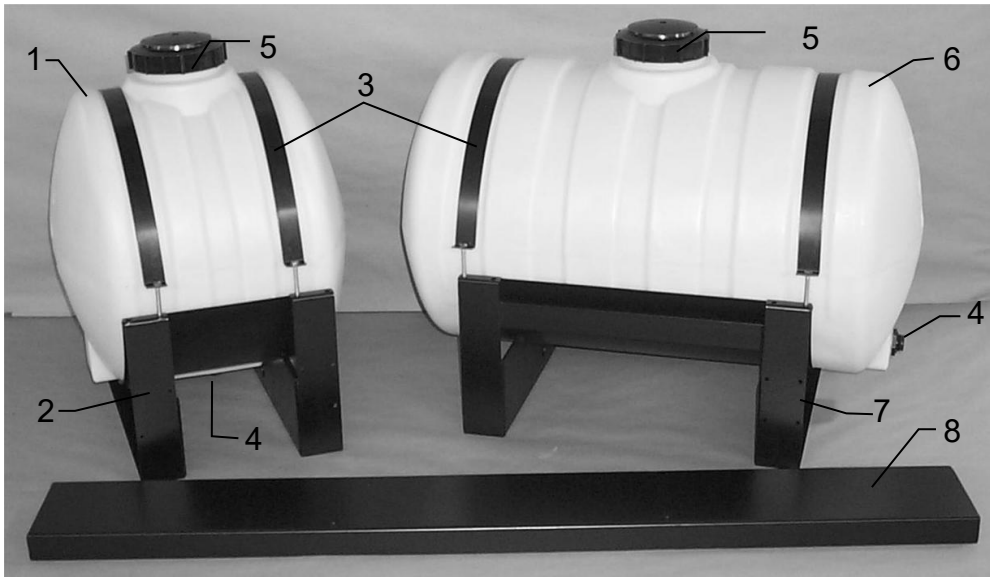


| Ref | Description | Part # | Qty |
|---|---|---|---|
| 1 | 25 Gallon Tank | 005-9022 | 1 |
| 2 | 25 Galon Tank Saddle | 005-4442 | 1 |
| 3 | Tank Strap | 001-4402 | 2 |
| 4 | Tank Fitting | 005-9100 | 1 |
| 5 | Tank Lid | 005-9022C | 1 |
| NP | Tank Lid Gasket | 005-9022CG | |

| Ref | Description | Part # | Qty |
|---|---|---|---|
| 6 | 55 Gallon Tank | 005-9203 | 1 |
| 7 | 55 Gal. Tank Saddle | 001-4445A | 1 |
| 8 | Cross Support Bracket | 001-4445B | 1 |

Tank Mount Kit (55 gal only (#8)) TMK-44255

**25 Gal Tank Saddle Kit (Ref. 1-5) 030-044225-TK**

**55 Gal Tank Saddle Kit (Ref. 3-7) 030-044255-TK**

# Latch Extension (001-442LE)
## For 747 and 442 Models Only

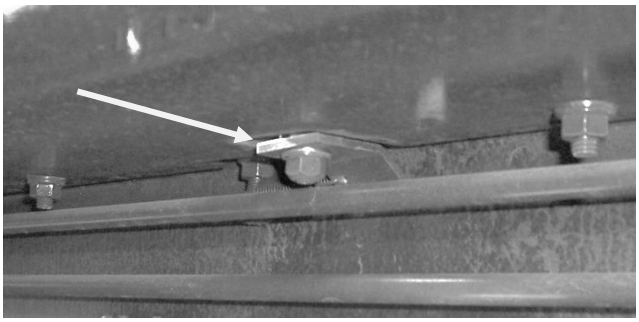

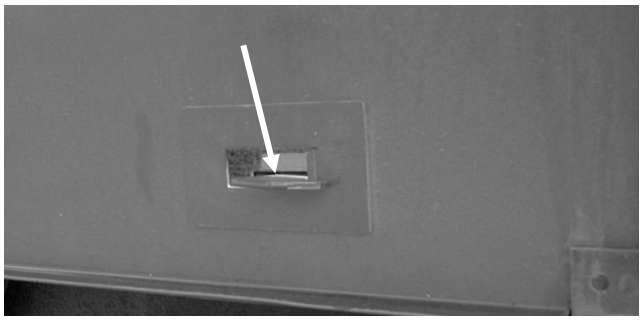

**Installation**

Remove the nut and spring on the existing latch. Replace with the extended latch. Retighten nut and attach the spring. The latch may need to be bent to fit through the doors opening.

# Applicator Kits 74755, 74725, 44255 and 44225
## Installation of Tank Saddle Kit (030-044255-TK)
### Requires Tank Mount Kit (TMK-44255)

***Installation of the cross support for 55 gallon model only***

Locate parts bag 14. Attach Cross Support Bracket (001-4445B) on the front shelf of the baler. It will butt up against step-up on the shelf and line up flush with its upper surface. Mark and drill a 9/16” (14mm) hole on each side sheet to hold cross piece in place with two 1/2” by 1-1/4” bolts, fender, and lock washers.

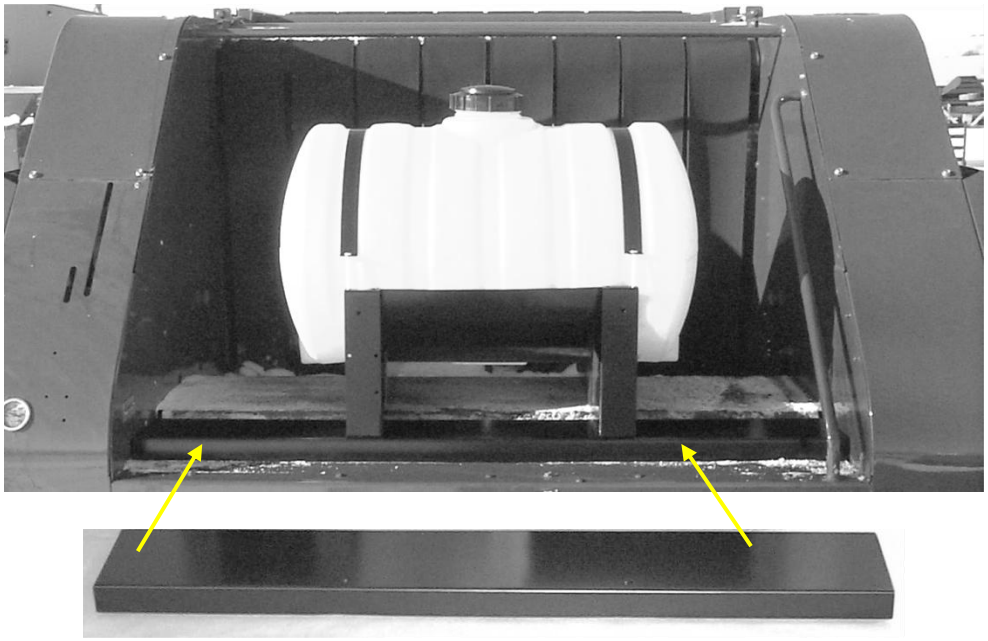

**Tank and Saddle Mounting – 25 and 55 gal sized tanks**

Locate parts bag 11. Place the tank and frame on the shelf of the baler and center it from side to side. On 55-gallon (210L) models (030-044255-TK), the tank positioning going from front to back is set by lining up the front base holes with the holes in the cross support. On 25-gallon (100L) models (030-044225-TK), line up the front tank legs with the front of the baler’s shelf. Mark and drill all base holes with a 9/16” (14mm) drill. Use the 1/2” by 1-1/4” bolts, lock washers, fender washers, and nuts provided to secure the frame.

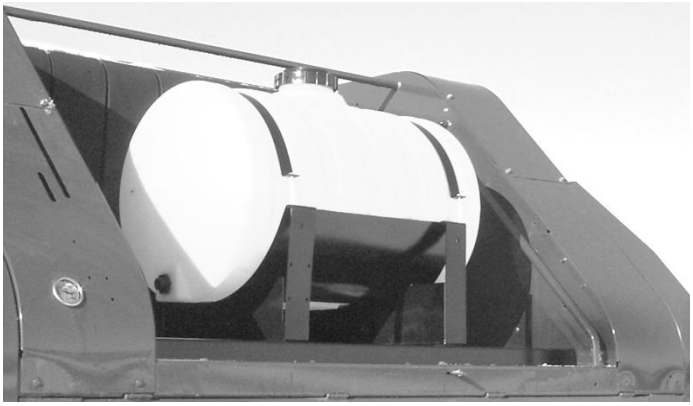

55 Gallon System

25 Gallon System

# Model 749 and 448 Base Kits
## 55 gal. Tank Saddle Kit (030-0448-TK)

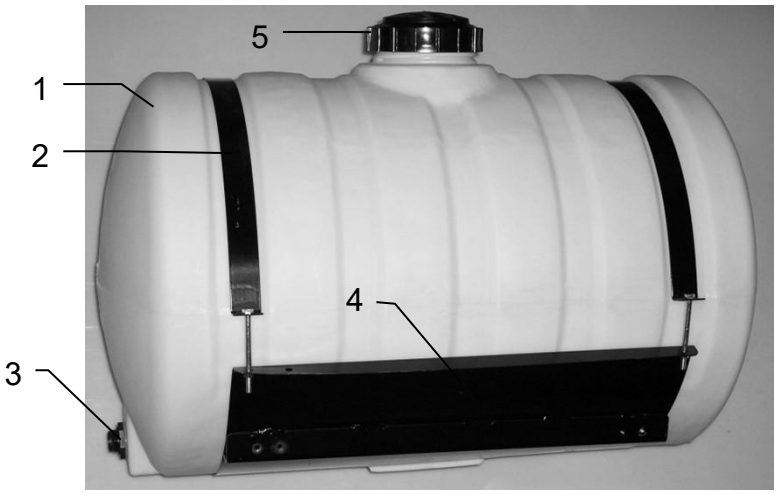


| Ref# | Description | Part # | Qty |
|---|---|---|---|
| 1 | Tank | 005-9203 | 1 |
| 2 | Tank Straps | 001-4402 | 2 |
| 3 | Tank Fitting | 005-9100 | 2 |
| 4 | Tank Saddle | 001-4703 | 1 |
| 5 | Tank Lid | 005-9022C | 1 |
| | Tank Gasket | 005-9022CG | 1 |

**Tank Saddle Kit (1-6)** **030-0448-TK**

## Tank Saddle Kit (030-0448-TK)
### Installing Tank to Tank Saddle
Locate parts bag 7. Place Tank (005-9203) onto Tank Saddle (001-4703). Make sure side tank fitting is placed to the baler's left side when looking at it from the front. Locate and attach Tank Straps (001-4402) to saddle using 5/16" x 4" bolts. Make sure to double nut all four bolts on tank straps.

Tank Saddle Kit (030-0448-TK) is a versatile tank kit that may be mounted to a variety of different baler makes and models when properly paired with the install kit designed for the baler. Reference the applicator Install Kit number in the following pages for the mounting instructions to attach the tank kit to your baler model.

# Install Kit 4503X or 4503

## Installation of Tank Saddle Kit (030-0448-TK)

### Requires use of Tank Mount Kit (TMK-4503)

***For John Deere 582 Round Balers:***

The mounting brackets are L-shaped. There is a right and left bracket enclosed in the applicator. This can be determined by setting the right and left bracket next to each other with the longer legs lying flat toward you and the shorter legs pointing up. The short leg of the bracket will either touch each other or angle away from each other. Place the brackets so they angle away from each other and form a **V** (see below). The bracket on the left is the left bracket and the bracket to the right is the right bracket.

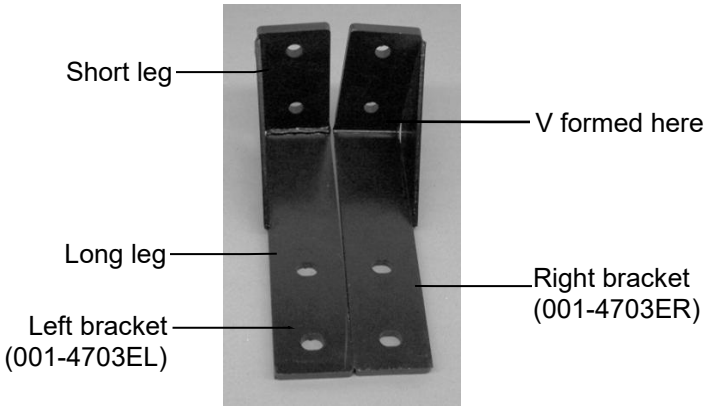


Before installing the brackets, the baler tongue must be supported by some means other than the jack (hooked to a tractor). Looking at the baler from the front, the right bracket bolts to the left side of the hitch using two 1/2" x 2” bolts, washers, lock washers, and nuts (labeled **L1** below). Short leg of brackets will point toward the front of the hitch. Next remove the two bolts holding the jack assembly to a baler (labeled **L2** below). Insert the right L-bracket between the jack assembly and baler. Bolt together with two M16 x 70mm bolts. Attach the tank legs (001-4703B) to the tank saddle with 3/8” x 1” bolts, locks, and flat washers. Attach the saddle legs to the mounting bracket with 1/2" x 1-1/2" bolts, locks, nuts and flat washers.

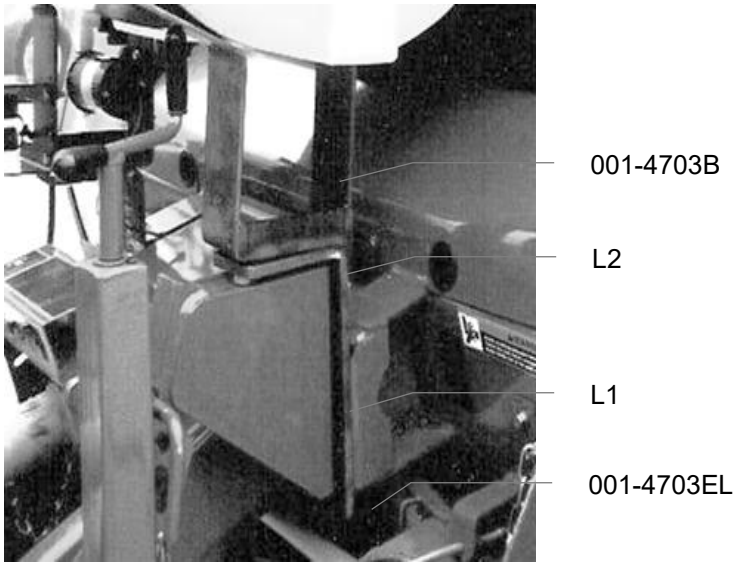

### *For John Deere 854 Balers:*

The mounting brackets are L-shaped. There is a right and left bracket enclosed in the applicator. This can be determined by setting the right and left bracket next to each other with the longer legs lying flat toward you and the shorter legs pointing up. The short leg of the bracket will either touch each other or angle away from each other. Place the brackets so they angle away from each other and form a **V** (see below). The bracket on the left is the left bracket and the bracket to the right is the right bracket.

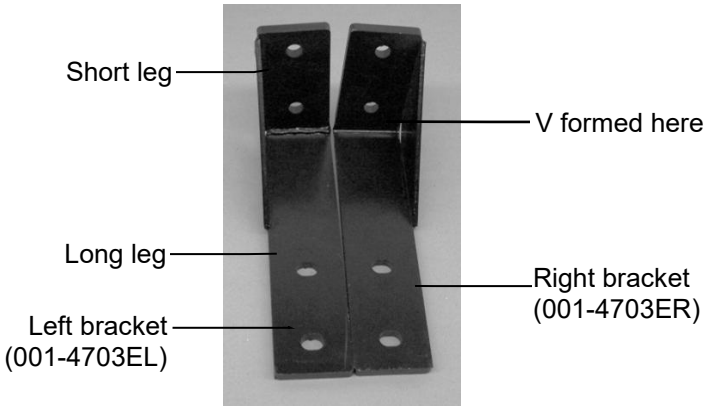


Before installing the brackets, the baler tongue must be supported by some means other than the jack (ex. hooked to a tractor). Looking at the baler from the front, the right bracket bolts to the left side of the hitch using two M16 x 55mm bolts, washers, lock washers, and nuts (labeled **L1** below). Short leg of brackets will point toward the front of the hitch. Next remove the two bolts holding the jack assembly to a baler (**L2** below).

Remove the jack from the mounting bracket and install jack extension (001-4703EXT) as shown below (3). Use the supplied hardware to mount the jack to the extension (*hole 4* M16x2mm) (*hole 5* M20x2.5mm) (*hole 6* M12 x 1.75mm), and use the factory jack hardware and mounting plates to mount the extension to the baler. Insert the right L-bracket between the jack assembly and baler. Bolt together with two M16 x 70mm bolts. Attach the tank legs (001-4703B) to the tank saddle with 3/8” x 1” bolts, locks, and flat washers. Attach the leg with 1/2” x 1-1/2" bolts, locks, nuts and flat washers.

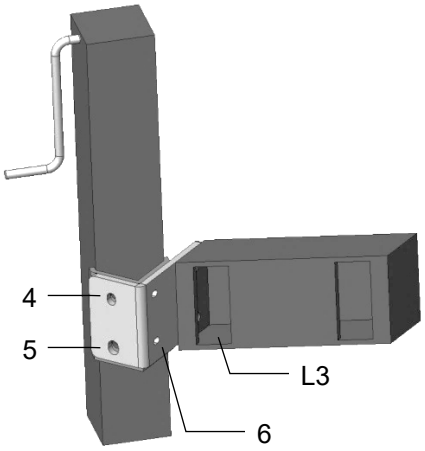


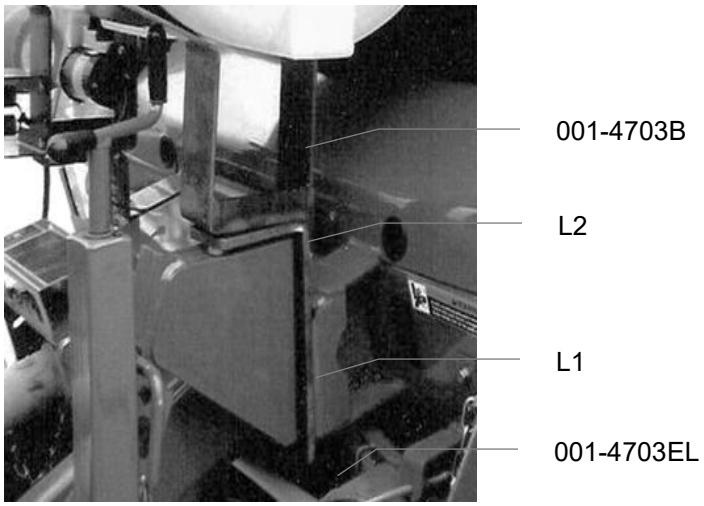

# Install Kits 4504X, 4517X, 4547X or 4504, 4517, 4547

## Installation of Tank Saddle Kit (030-0448-TK)

### Requires Tank Mounting Kit (TMK-4504)

Attach L-Shaped Mounting Brackets (001-4703DL and 001-4703DR) to the baler using supplied M12 x 45 mm bolts (Figure 1). Attach Tank Legs (001-4703B) to the tank saddle using supplied 3/8” x 1” bolts, lock and flat washers. Three bolts will be used per side on 8 Series balers and two bolts per side with the 9 Series balers.

With both legs attached to tank saddle, place the tank assembly on top of the mounting brackets that were just installed on baler (Figure 2). Attach tank legs to mounting brackets using supplied 1/2” x 1-1/2" bolts, nuts, flat, and lock washers. Install both sides of legs before tightening down any of the bolts.

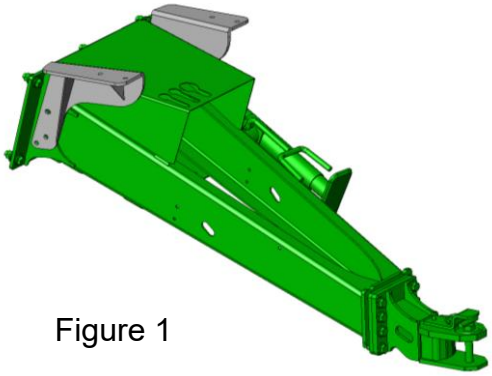

Figure 1

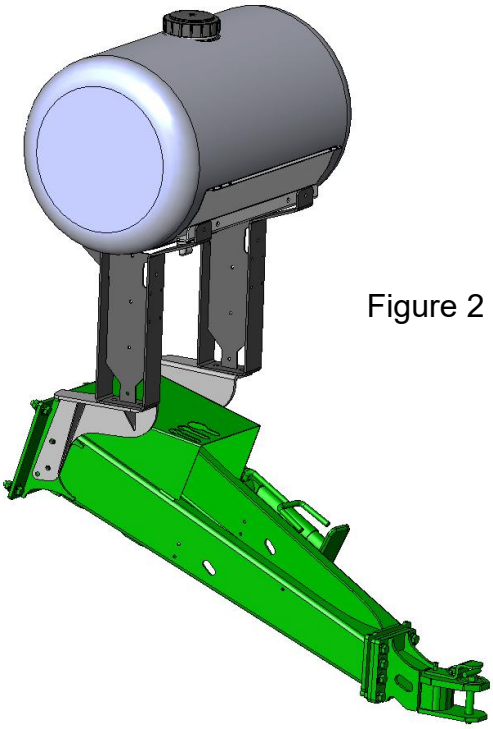

Figure 2

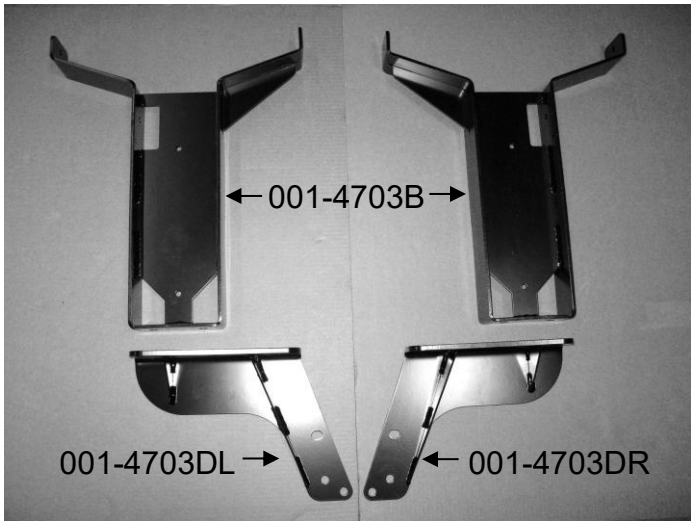

# Install Kit 4505X or 4505

## Installation of Tank Saddle Kit (030-0448-TK)

### Requires use of Tank Mount Kit (TMK-4505)

Locate Left Tank Leg (001-4703FL) and Right Tank Leg (001-4703FR) and attach to tongue of baler using the one existing hole per side as shown (**A**). If the holes are not pre-dilled, hole (**A**) will need to be located 8” (20cm) down from the top of the hitch rail and 4.75” (12cm) from the end of the hitch rail. Loosely attach the legs at (**A**) using two 1/2” x 1-1/4” bolt, nuts, locks and flat washers. Mark the two holes that will need to be drilled (**B**) using a 9/16” (14mm) bit. Attach legs loosely using additional four 1/2” x 1-1/4” bolt, nuts, locks and flat washers.

Place the tank saddle assembly on top of legs and secure with provided hardware. Tighten all hardware after the tank has been installed.

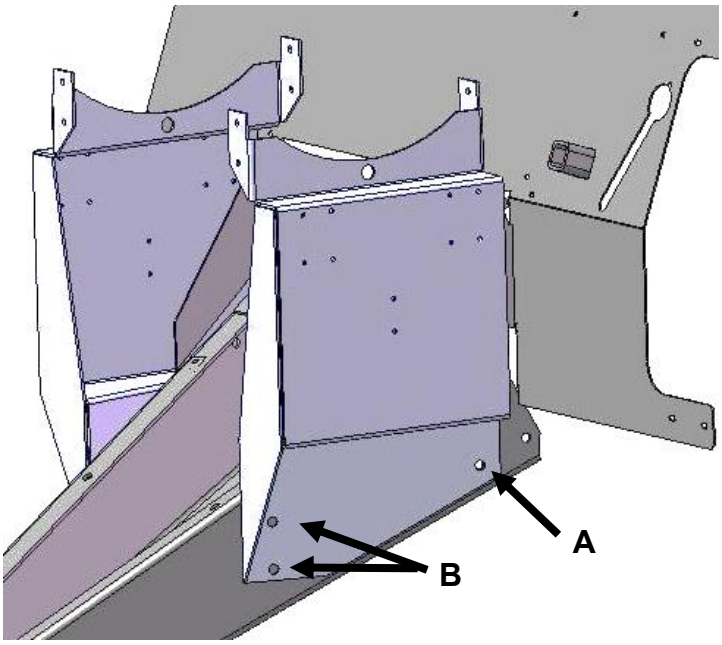

# Install Kit 4508X or 4508

## Installation of Tank Saddle Kit (030-0448-TK)

### Requires use of Tank Mount Kit (TMK-4508)

Locate Tank Leg Brackets (001-4703K and 001-4703L). Use the diagram below to locate the placement of the holes to be drilled. Three 1/2" (13mm) holes per side of tongue will need to be drilled. After drilling holes, loosely attach the legs to tongue using supplied 1/2" X 2” bolts with locks, nuts, and flat washers **(A)**. Loosely attach the Tank Saddle (001-4703) and tank assembly on top of the legs using supplied 3/8” x 1” bolts and lock washers **(B)**. Once tank saddle is attached to legs, first tighten down bolts and nuts attaching the legs to the tongue. Second, tighten down bolts attaching saddle to legs. Be sure to fully tighten all mounting hardware.

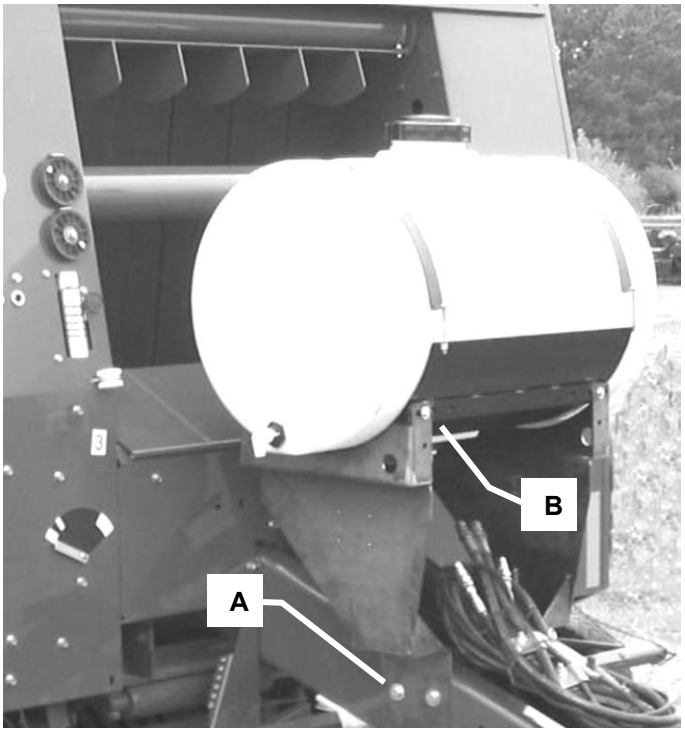


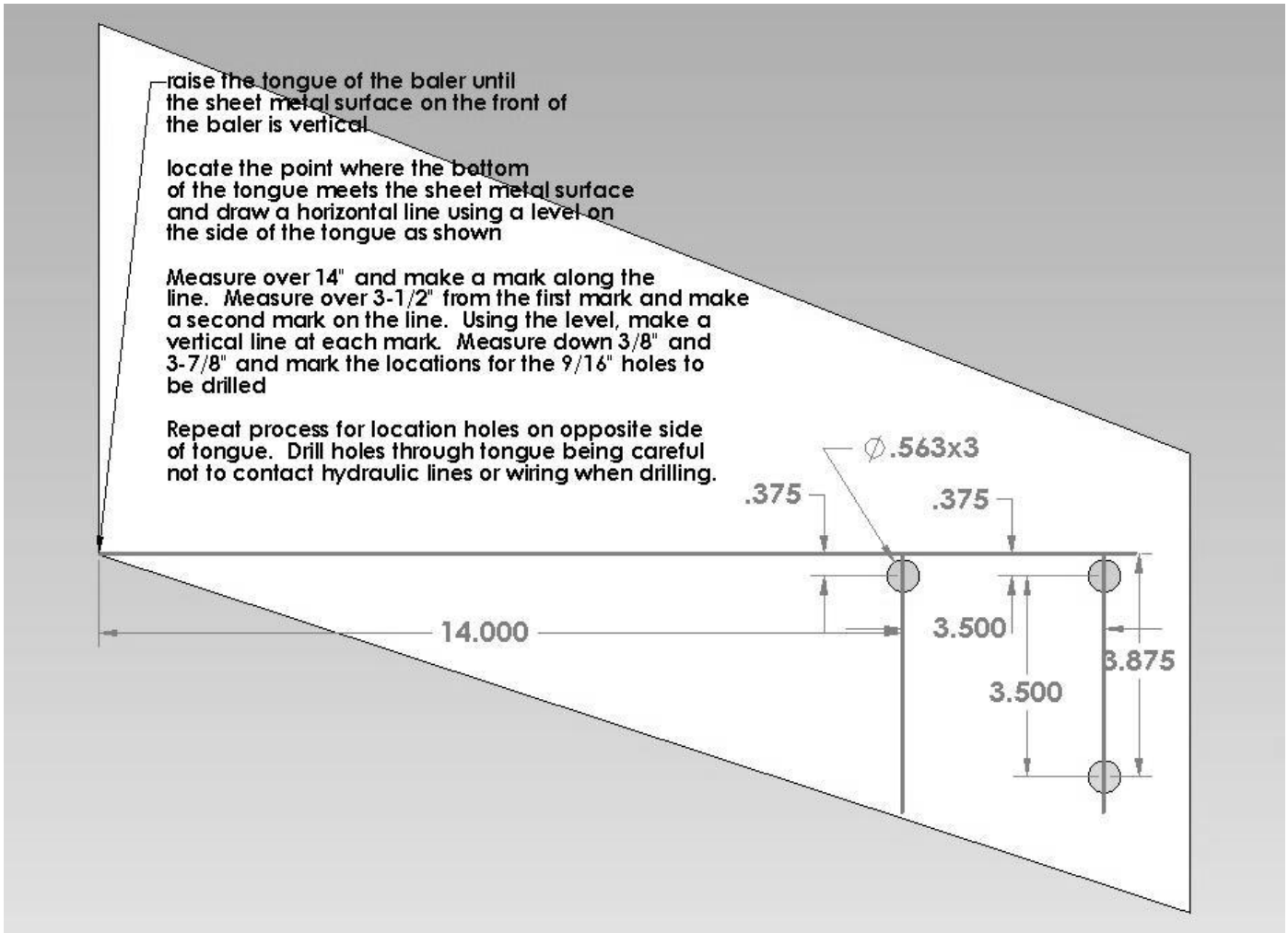

# Install Kits 4523X or 4523

## Installation of Tank Saddle Kit (030-0448-TK)

### Requires Tank Mounting Kit (TMK-4523)

The tank saddle assembly will on the baler similar as shown in the picture below.
Attach both Tank Legs (001-4703B) to tank saddle using supplied hardware. Place the tank assembly as far forward as possible on the baler service platform and mark and drill the four 1/2" (13mm) holes for tank legs. Locate the Left Support Legs (001-4704JL) and the Right Support Leg (001-4704JL). Align the support legs below the tank legs **(A)** and attach through the baler platform using four supplied 1/2” x 1-1/2” bolts, locks, flats and nuts. Mark and drill four 9/16” (14mm) holes where the support legs **(B)** meet on the baler hitch. Attach the legs to the baler frame using four supplied 1/2" x 1-1/2” bolts, locks, flats and nuts. Tighten all hardware.

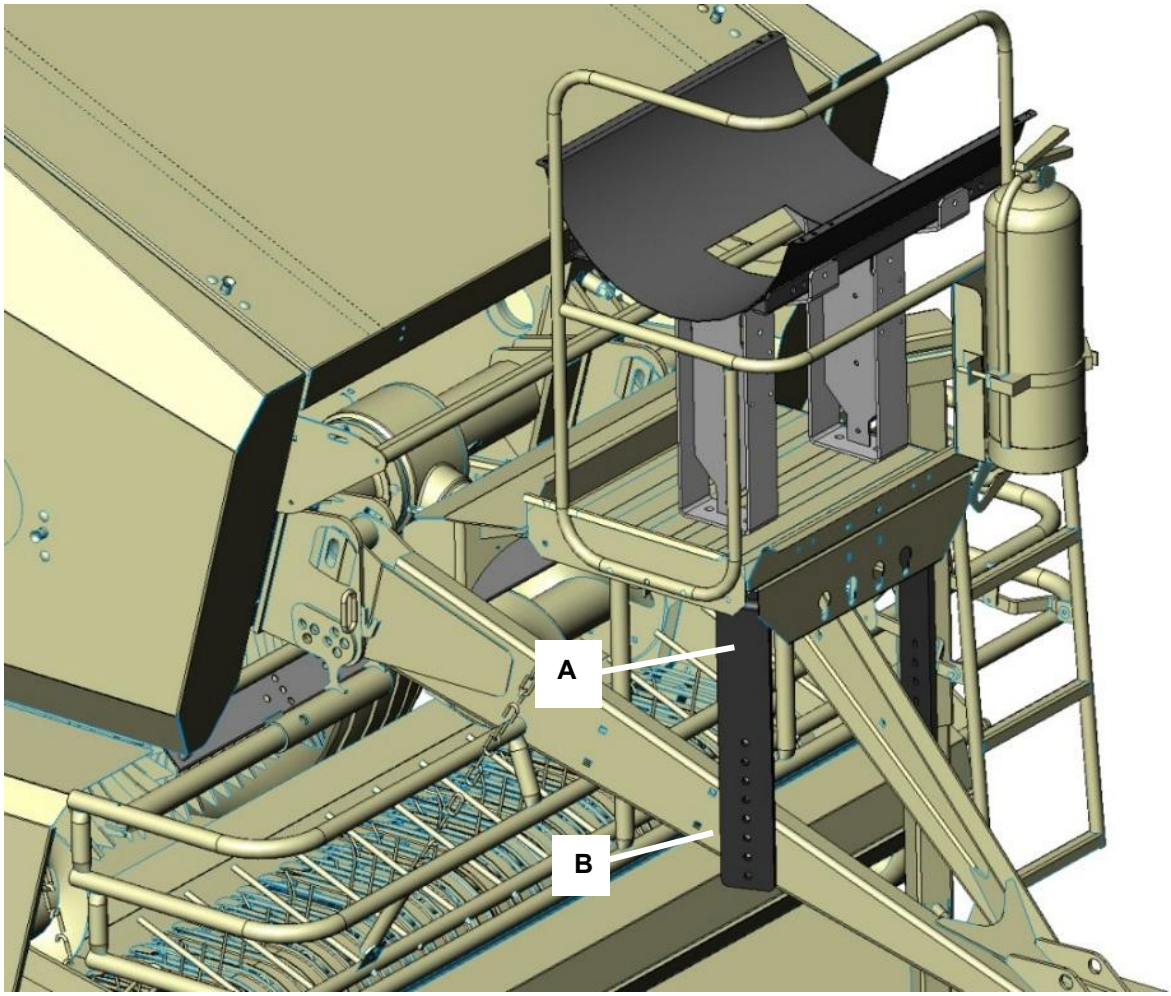

# Install Kits 4524X or 4524

## Installation of Tank Saddle Kit (030-0448-TK)

### Requires Tank Mounting Kit (TMK-4508)

Locate Tank Legs (001-4703K and 001-4703L). Use the diagram below to locate the placement of the holes that need to be drilled. Three 1/2" (13mm) holes must be drilled on each side of the baler tongue. After holes are drilled, loosely attach the legs to the tongue using supplied 1/2" X 2” bolts with locks, nuts, and flat washers (Figure 1). Place tank saddle (001-4703) and tank assembly on top of the legs and loosely attach using 3/8” x 1” bolts and lock washers (Figure 2). Once saddle is attached to legs, tighten down bolts and nuts attaching the legs to the baler tongue. Tighten bolts attaching saddle to legs after baler tongue bolts have been tightened.

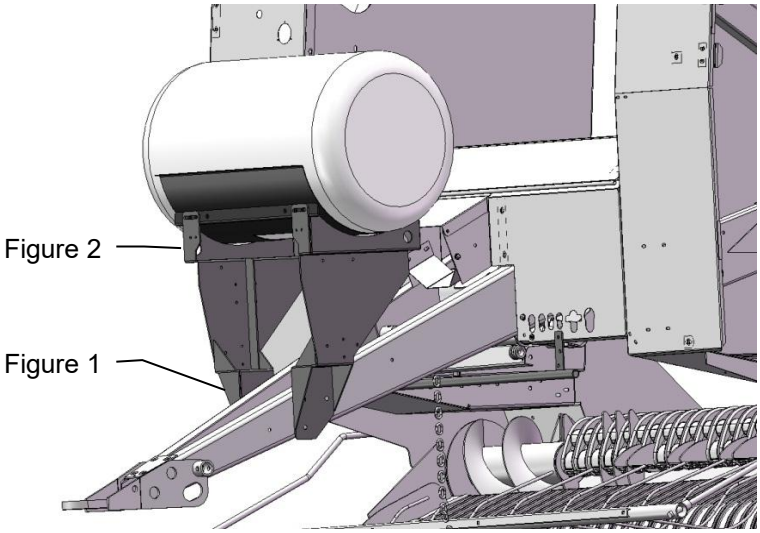


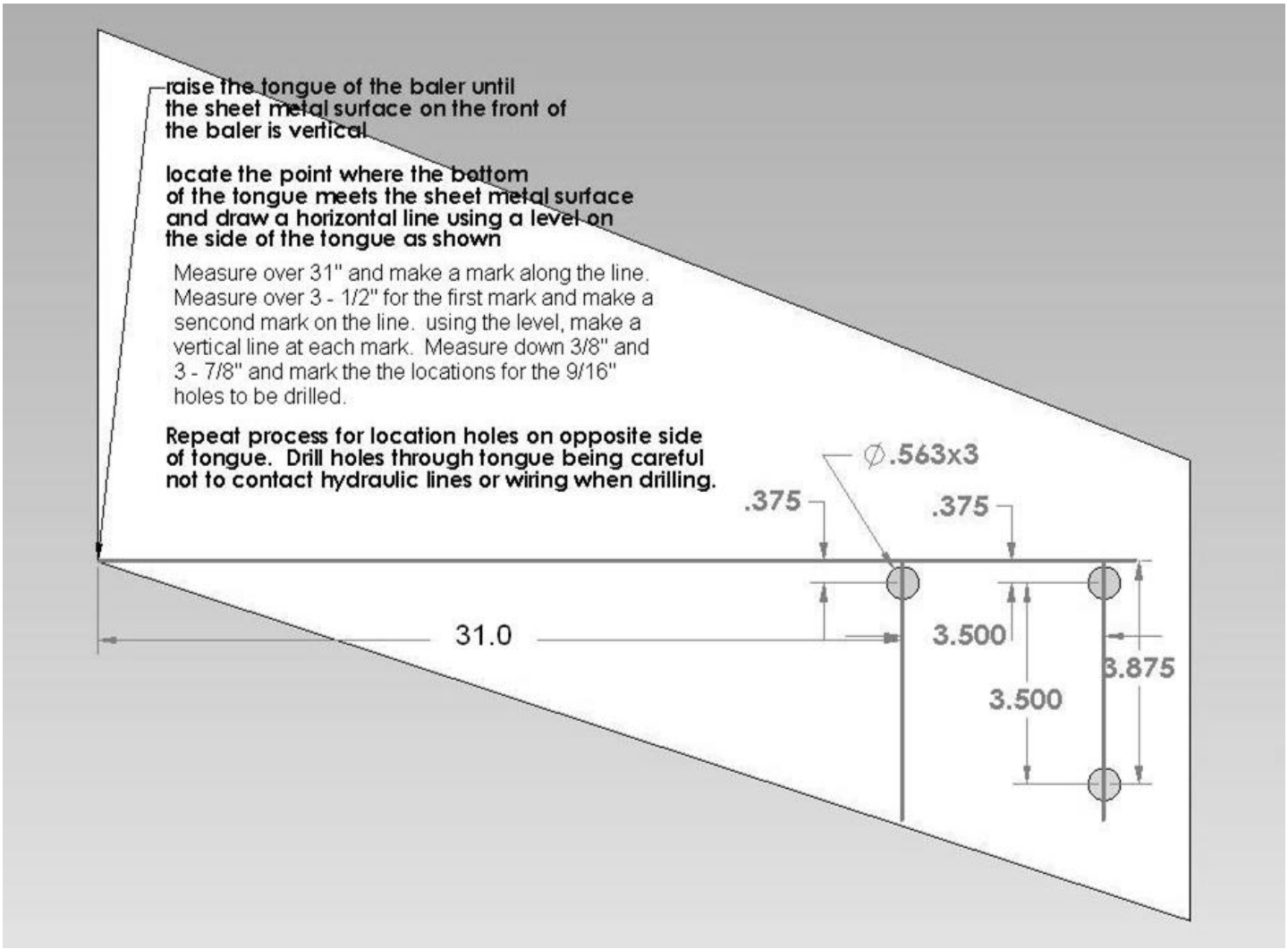

# Install Kits 4526X or 4526

## Installation of Tank Saddle Kit (030-0448-TK)

### Requires Tank Mounting Kit (TMK-4526)

Locate Top Plate (001-4704ME) and Side Support Brackets (001-4704MA). Loosely attach side support brackets to outer holes on the top plate.

Place support brackets on the baler hitch and move towards the baler until the bracket contacts both sides of the baler hitch. Mark and drill four 1/2” (13mm) holes needed and attach the support bracket using four supplied 1/2" x 1-1/2” bolts, locks, flats, and nuts. Tighten hardware.

Mount the Tank Legs (001-4703B) and tank saddle to the top of the Mounting Bracket (001-4704MA). Use four 1/2” x 1-1/2” bolts, locks, flats, and nuts. Tighten hardware.

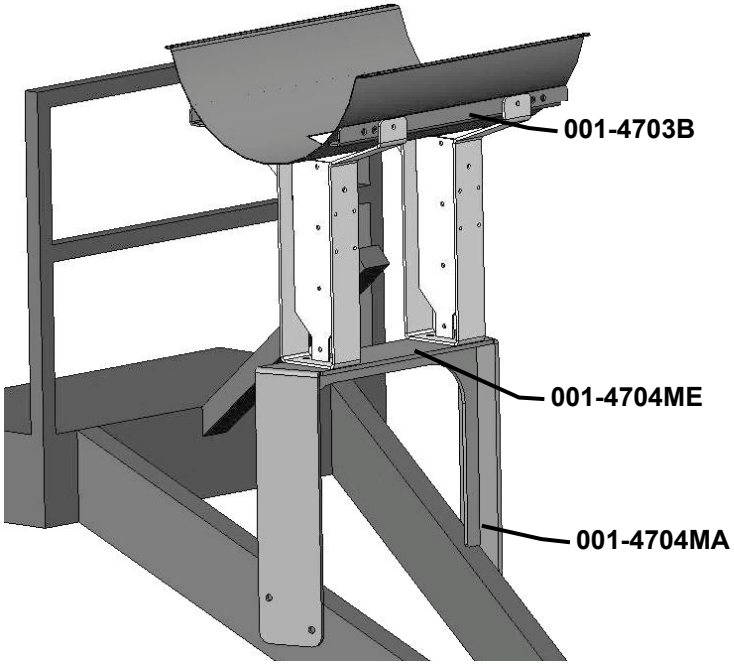


# Install Kits 4531X or 4531

## Installation of Tank Saddle Kit (030-0448-TK)

### Requires Tank Mounting Kit (TMK-4531)

Attach Tank Legs (001-4703B) to Tank Leg Support Brackets (right side bracket 001-ACX2873280) and (left side bracket 001-ACX2873560) using supplied 1/2" x 2” bolts and hardware. Saddle leg brackets attach to baler hitch with 3/8” x 1 1/2" bolts and harware using the predrilled factory holes. Place and attach the tank saddle to the top of the saddle legs using supplied 3/8” x 1 1/4" bolts and hardware. Tighten and secure all bolts prior to installing the tank into the tank saddle. Using 5/16” x 3” bolts and hardware, secure tank to tank saddle using Tank Straps (001-4402).

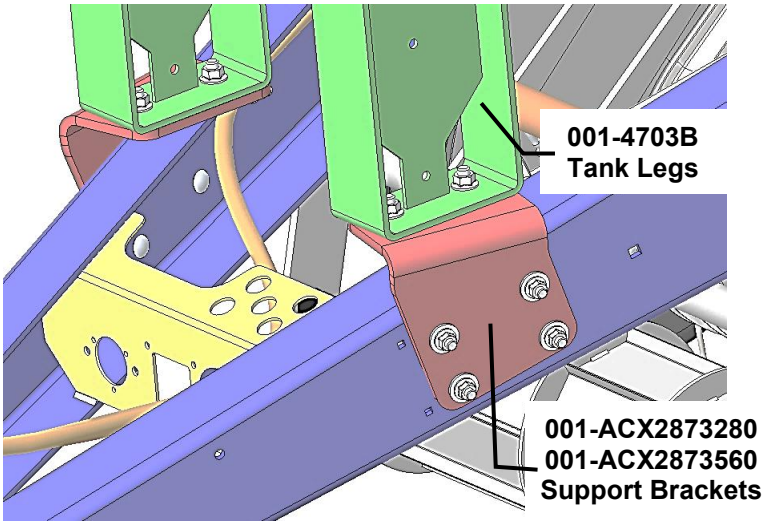


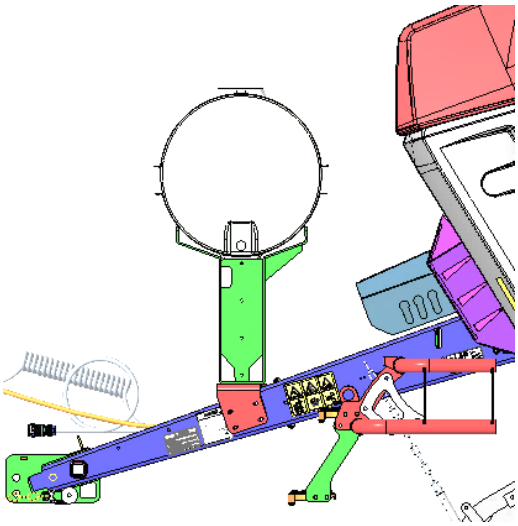

# Install Kits 4538X or 4538

## Installation of Tank Saddle Kit (030-0448-TK)

### Requires Tank Mounting Kit (TMK-4538)

***Illustrated Installation on next page***

The tank mounting uses 1 existing bolt on each side of the tongue. Locate the net wrap cap bracket on the inside of the right side of the tongue. Remove the bracket. Drill out the front hole to 9/16” (14mm) diameter (A). Reinstall net wrap cap bracket with one existing bolt/nut in the back mounting hole. Place the rear, bottom hole on tank support, 001-4704MA, on the newly drilled hole. Use supplied hardware, 1/2” x 1-1/4” hex bolt, washer, lock washer, and nut to secure tank support. Ensure the bracket is vertical, then mark and drill the front, bottom hole for the tank support (B). Secure with same hardware. Use tank support brace, 001-4704MDJ, to secure the tank support to a 3rd point further forward on tongue (C). Mark and drill 9/16” (14mm) diameter hole. Secure top and bottom of brace with 1/2” x 1-1/4” hex bolt, washer, lock washer, and nut.

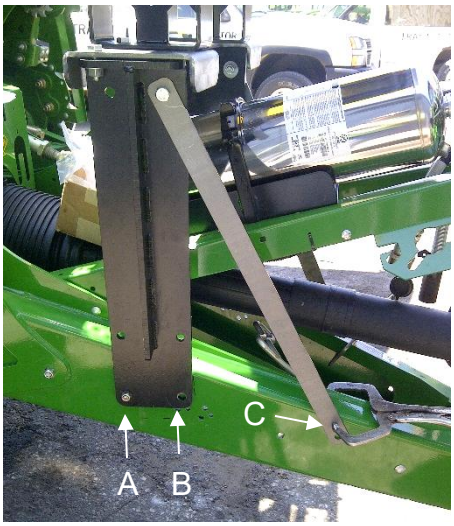


Locate existing hole on left side of tongue, opposite of the existing hole used on the right side of the tongue. Drill hole out to 9/16” (14mm) diameter as done on previous side. Place the rear, bottom hole of tank support, 001-4704MA, over newly drilled hole and secure with 1/2” x 1-1/4” hex bolt, washer, lock washer, and nut. Ensure the bracket is vertical, then mark and drill front hole of support, secure with 1/2” x 1-1/4” hex bolt, washer, lock washer, and nut. Use tank support brace, 001-4704MDJ, to secure the tank support to a 3rd point further forward on tongue (C). Mark and drill 9/16” (14mm) diameter hole. Secure top and bottom of brace with 1/2” x 1-1/4” hex bolt, washer, lock washer, and nut.

With the two tank supports, 001-4704MA, mounted to each side of tongue, install the cross member support, 001-4704MEJ, on the top of both 001-4704MA supports. The outer most holes on the cross member should line up with the tank supports. Use 1/2” x 1-1/4” hex bolt, washer, lock washer, and nut to secure bracket. Install both tank legs, 001-4703B, to the remaining four holes on the cross member using 1/2” x 1-1/4” hex bolt, washer, lock washer, and nut. Only snug bolts at this time.

Place tank and saddle assembly on top of the leg supports. The two inner most holes on the saddle should line up with the leg supports. Start the hardware that connects the legs to the saddle,
3/8” x 1” hex bolt, lock washer, and flat washer. Once all four bolts are started, tighten the bolts that secure the leg supports, 001-4703B, to the cross member, 001-4704MEJ. With the legs tightened to cross member, then you can tighten the legs to the saddle.

## *Illustrated Installation*
**For Install Kit 4538X or 4538**

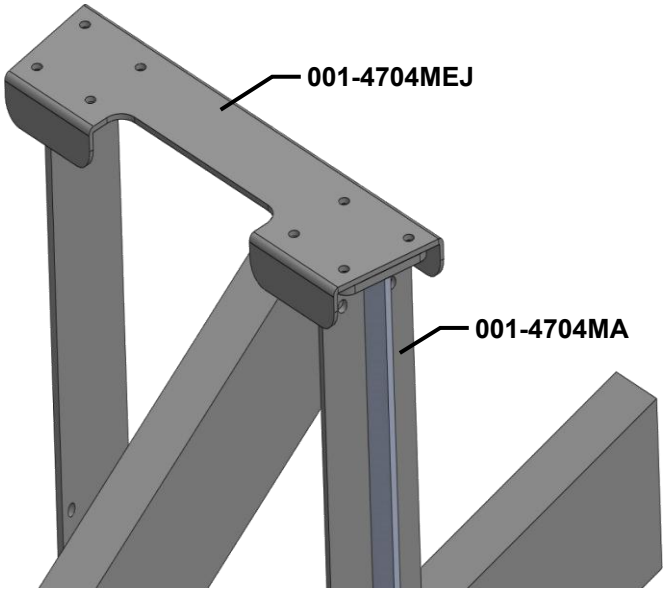


Step 1

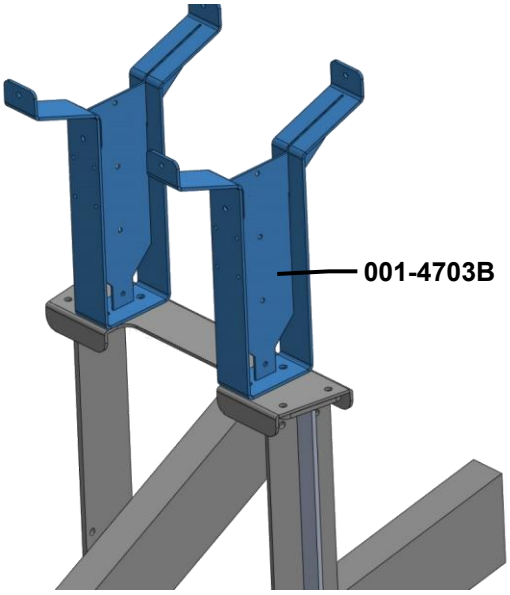


Step 2

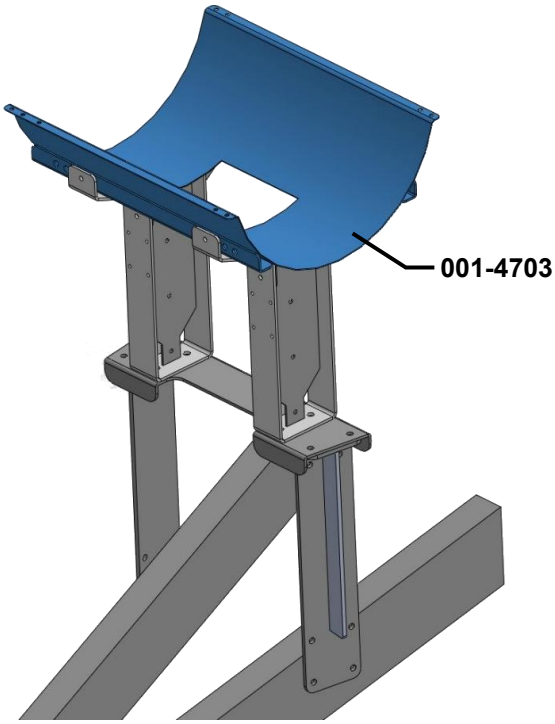


Step 3

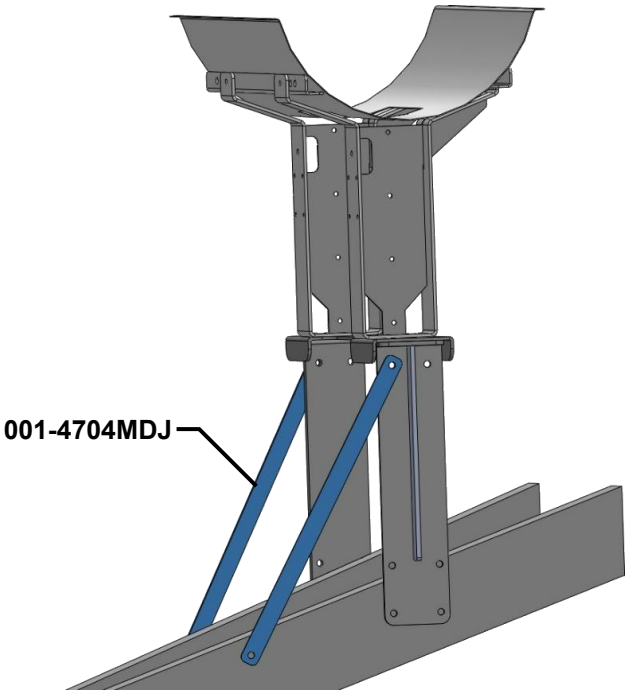


Step 4

# Install Kits 4543X or 4543

## Installation of Tank Saddle Kit (030-0448-TK)

### Requires Tank Mounting Kit (TMK-4543)

Locate parts bag 16 and the two Tank Leg Support Brackets (001-6055VER & 001-6055VEL) shown right.

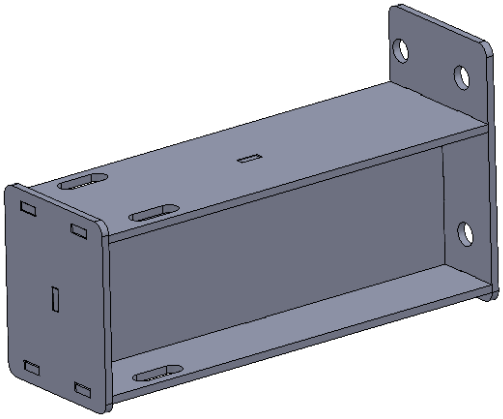

Using the bolts already in place on the baler tongue where it meets the baler: Remove the bolts and install on each side the support brackets (001-6055VER & 001-6055VEL) and securing using the original factory bolts and nuts.

Place the Tank Saddle Legs (001-4703B) on top on top of the mounted support brackets and secure using supplied nuts, washers and bolts from parts bag 16.
Place tank and saddle assembly on top of the leg supports. Start the hardware that connects the legs to the saddle, 3/8” x 1” hex bolt, lock washer, and flat washer. Once all four bolts are started, tighten the bolts that secure the tank supports.

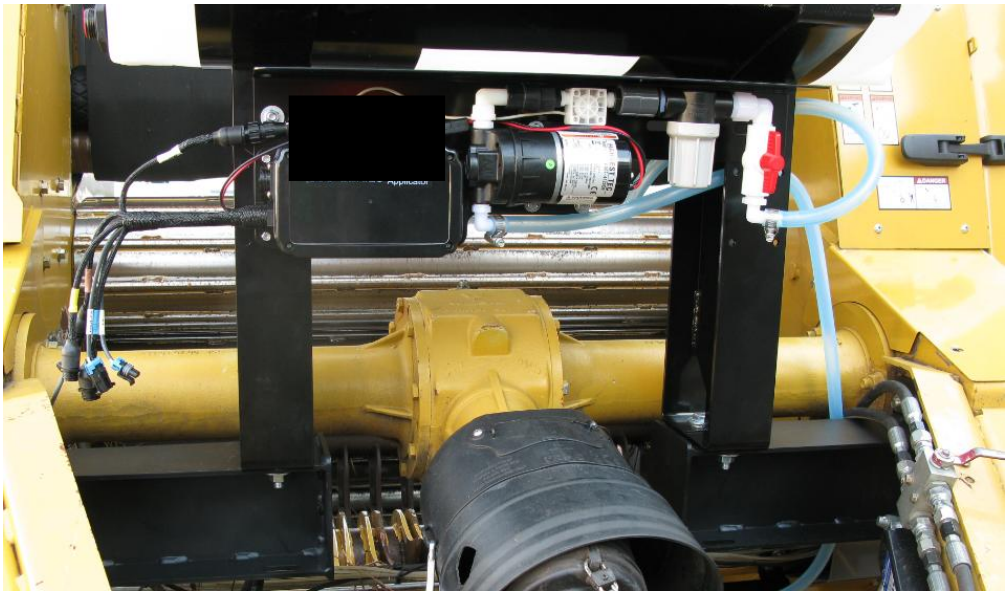

# Install Kits 4549X or 4549

## Installation of Tank Saddle Kit (030-0448-TK)

### Requires Tank Mounting Kit (TMK-4549)

Prior to installing the tank legs, modification to the PTO gearbox shield and twine box door is required. Place hinges (001-4703VHG) approximately 2” from the outer edge of the PTO gearbox shield, mark, drill and attach each hinge connecting the PTO shield to the twine box door with four 5/16”x1” flange bolts and nuts. After hinges are secured, remove factory bolts attaching PTO shield to twine box door. This will result in a hinged access to the PTO gearbox which allows the twine box door to open after the preservative tank is mounted.

Add hinges and secure before lifting and removing factory bolts that connect the panels

The Z-shaped brackets (001-4703F) will attach to the baler tongue with three 1/2" x 1 1/2" bolts per side. The baler tongue must be supported either at the field-ready position or hooked to the tractor. The first hole should be marked and placed 19.75” from the front side of the gusset plate and 3.75” down perpendicular from the top of tongue (see Figure A on next page). Mark and drill center hole on each side of the tongue. Attach Z bracket by using one 1/2" x 1 1/2" bolt, washer, lock washer and nut on each side. Place a level across the top of each bracket and pivot until horizontal. Tighten brackets to tongue. Mark and drill the remaining two holes on each side. Secure with additional 1/2" x 1 1/2" bolts, washers, lock washers and nuts.

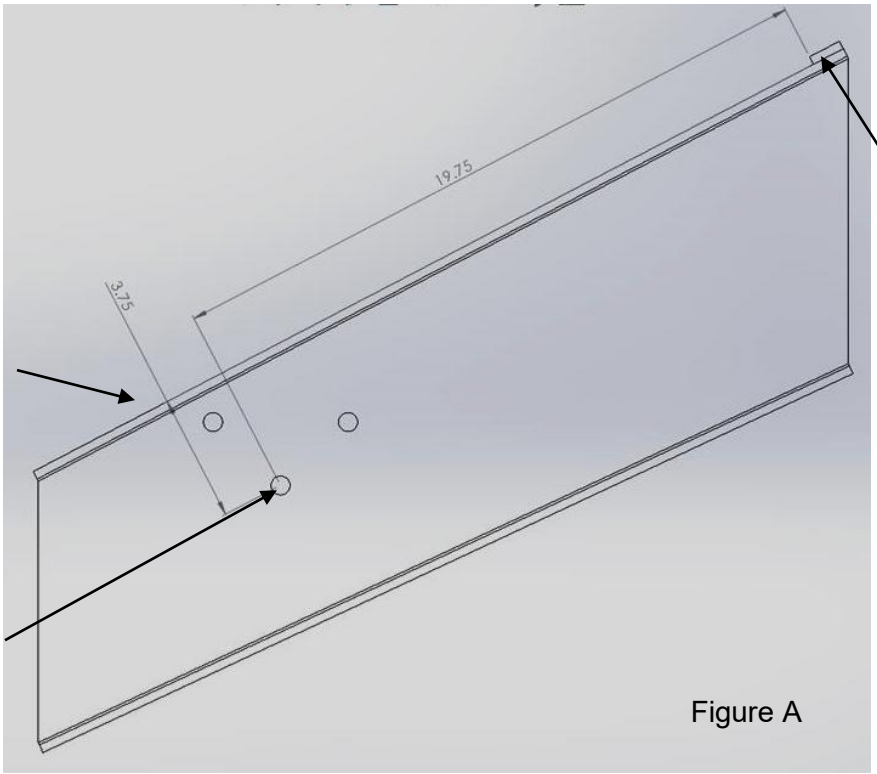


Gusset Plate Edge

Top of baler tongue

Drill for middle hole on Z bracket mount

Figure A

## Install Kits 4549X or 4549 (continued)

Attach tank legs (001-4703B) to the tank saddle with 3/8” x 1” bolts, lock and flat washers. Install both sides of legs before tightening down any of the bolts. Place the tank saddle legs (001-4703B) on top on top of the Z shaped mounting brackets and secure with nuts, washers and bolts from parts bag 16. Tighten all bolts on tank mount assembly and brackets. Install tank and secure with tank straps.

Crimp one side of the S hooks securing it to the rubber latch strap (001-4703CL). Attach one open end of latch strap to an unused hole on the tank saddle and crimp closed. Use remaining open S hook end on latch strap for temporarily assisting in accessing the twine box.

Crimp S hook from latch strap to unused hole on tank saddle to allow for easier access to twine box door

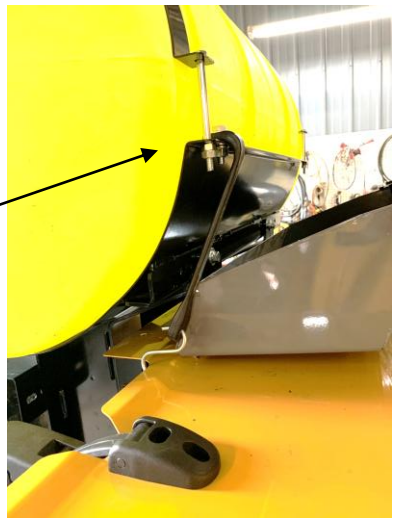

# Install Kits 4555X or 4555

## Installation of Tank Saddle Kit (030-0448-TK)

### Requires Tank Mounting Kit (TMK-4549)

Ensure that the baler is parked in the field-ready draw bar height position. Remove the hose holder bracket from the baler tongue. Mark a line straight across the twine door connecting the bottom outside edges on both sides. Make a clean cut along the line to cut the lower portion of the shield off. Clamp the two pieces back together and mark the mounting hole locations of the hinges. Drill the holes for the hinge hardware and attach the bottom portion of the shield back to the twine door with the two hinges. Drill 2x 5/16" hole near the corners (X) of the lower shield, and attach the rubber bump stops to the bottom of lower shield with ¼" hardware.

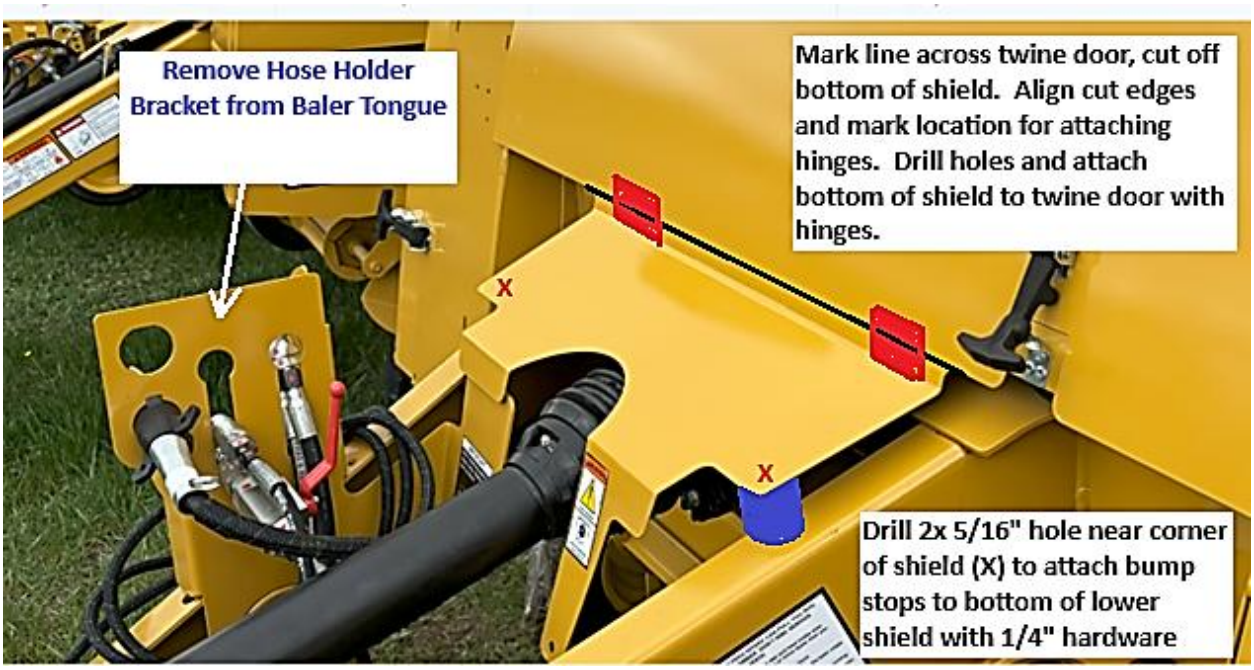


Locate the gusset on the top face of the baler tongue. Along the top outside edge of the tongue, Measure and mark distances A, B, & C referenced below. Using a square along the top outside edge of the tongue, measure down distance D, E, & F as indicated below, and make a mark (+).

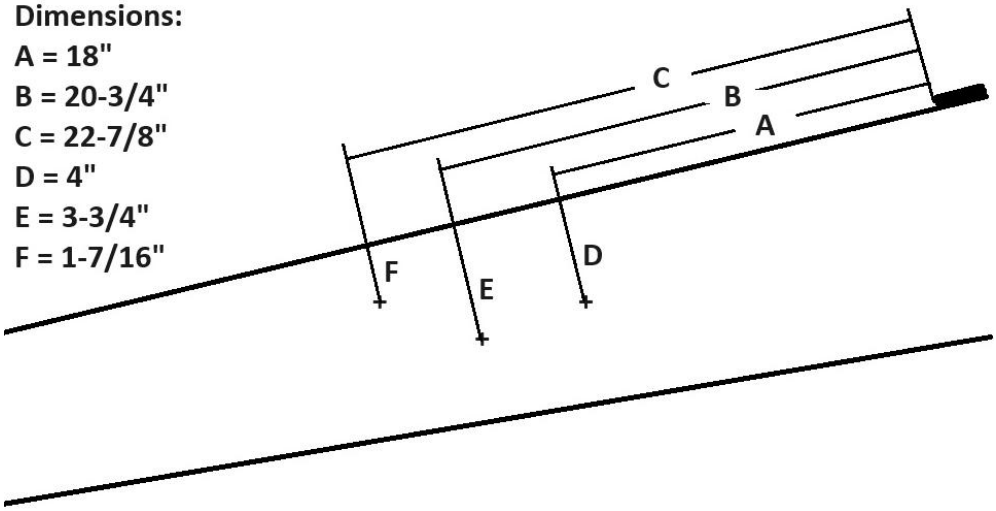

## Install Kit 4555X (continued)

Clamp 001-4703F to the side of the baler tongue, aligning the 3 holes in the bracket with the three marks on the side of the tongue. With the holes aligned, verify that the top of 001-4703F is level, center punch the 3 locations. Unclamp 001-4703F and drill a 9/16” diameter hole in the three locations. Bolt 001-4703F to the side of the tongue with the supplied ½” hardware. Repeat the process for the 2nd 001-4703F bracket on the other side of the tongue.

After both 001-4703F brackets are bolted to the tongue, install the 001-4703B legs to the tank saddle using the inside set of holes on the saddle. Orient both legs so they have the gusset on the backside of the legs towards the baler. Attach the legs to the saddle with 3/8” hardware. Place the tank saddle assembly with legs on top of the 001-4703F brackets, center, and secure with ½” hardware.

Attach the strap to the saddle. Fold the lower portion of the twine door up, verify it does not contact the mounting brackets. If there is interference, the interfering section of the lower shield may need to be trimmed. Open the twine door until it is horizontal to verify clearance, the strap can be used to hold the door in the open position. Hose holder bracket may be reinstalled at installer’s discretion onto tank leg bracket if space allows.

Crimp one side of the S hooks securing it to the rubber latch strap (001-4703CL). Attach one open end of latch strap to an unused hole on the tank saddle and crimp closed. Use remaining open S hook end on latch strap for temporarily assisting in accessing the twine box.

Crimp S hook from latch strap to unused hole on tank saddle to allow for easier access to twine box door

# Drain Fill Line Tank Kit (030-0493DFK)

## Included with 731, 747, 749 or 431, 442, 448 Applicator Kits

### Installation

Locate Parts Bag 1 (PBA-1) and 3/4" EVA Tubing. Thread 3/4" elbow fitting (003-EL3434) into end of tank. Run the 3/4" hose from the elbow down the frame to a suitable location at the bottom of the baler. Locate the two holes on the baler's angled support bracket that line up with the holes in the valve bracket (001-6702H) and attach using two 5/16" x 1" self-tapping screws and secure with two 5/16" flange nuts. Connect valve assembly to other end of hose. Place hose clamps on both ends. Install supplied safety decals (DCL-8001 & DCL-8005) next to the ball valve assembly. Secure hose to baler frame using cable locks. The drain/fill line is to be used for all filling or draining of the tank. Fill or drain tank from ground level only. Transfer Pump Kits are available from Harvest Tec to utilize the drain/fill line connections.

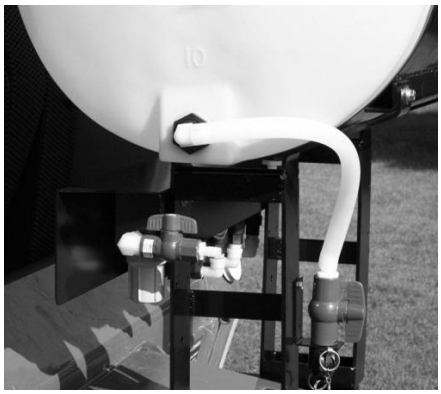

## Parts Bag Packages & Hoses

**PBA-1**

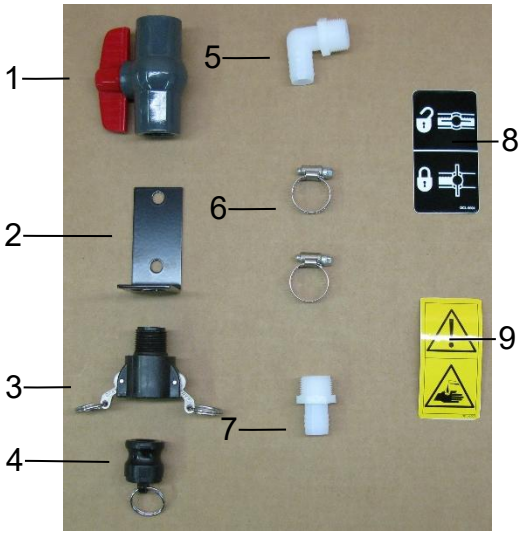


| Ref | Description | Part # | Qty |
|---|---|---|---|
| 1 | 3/4" Ball Valve | 002-2200 | 1 |
| 2 | Valve Holder | 001-6702H | 1 |
| 3 | Female Coupler | 002-2204A | 1 |
| 4 | Male Shut-Off Plug | 002-2205G | 1 |
| 5 | 3/4" x 3/4" Elbow | 003-EL3434 | 1 |
| 6 | #10 Hose Clamp | 003-9004 | 2 |
| 7 | 3/4" x 3/4" Straight Fitting | 003-A3434 | 1 |
| 8 | Valve Decal | DCL-8004 | 1 |
| 9 | Chemical Hazard Decal | DCL-8001 | 1 |
| | **Complete Drain Fill Kit** (Inc. 10' of 3/4" EVA hose) | **030-0493DFK** | |

**PBP-16**

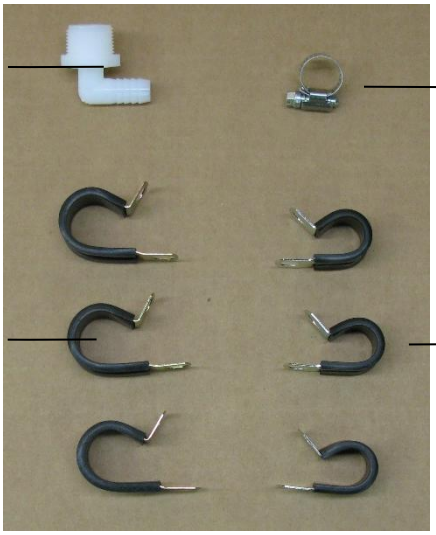


| Ref | Description | Part # | Qty |
|---|---|---|---|
| 10 | 3/4" x 1/2" Elbow | 003-EL3412 | 1 |
| 11 | 3/4" Jiffy Clip | 008-9010 | 3 |
| 12 | #6 Hose Clamp | 003-9003 | 1 |
| 13 | Small Jiffy Clip | 008-9009 | 3 |

## RB Hoses - Auto Systems

| | | |
|---|---|---|
| 1/4" Hose (Solenoid to Tips) | 002-9016 | 6 ft |
| 1/2" Hose (Pump to Solenoid) | 002-9001 | 15 ft |
| 3/4" (Drain/Fill Line) | 002-9002 | 10 ft |

## Parts Breakdown for Pump Assembly

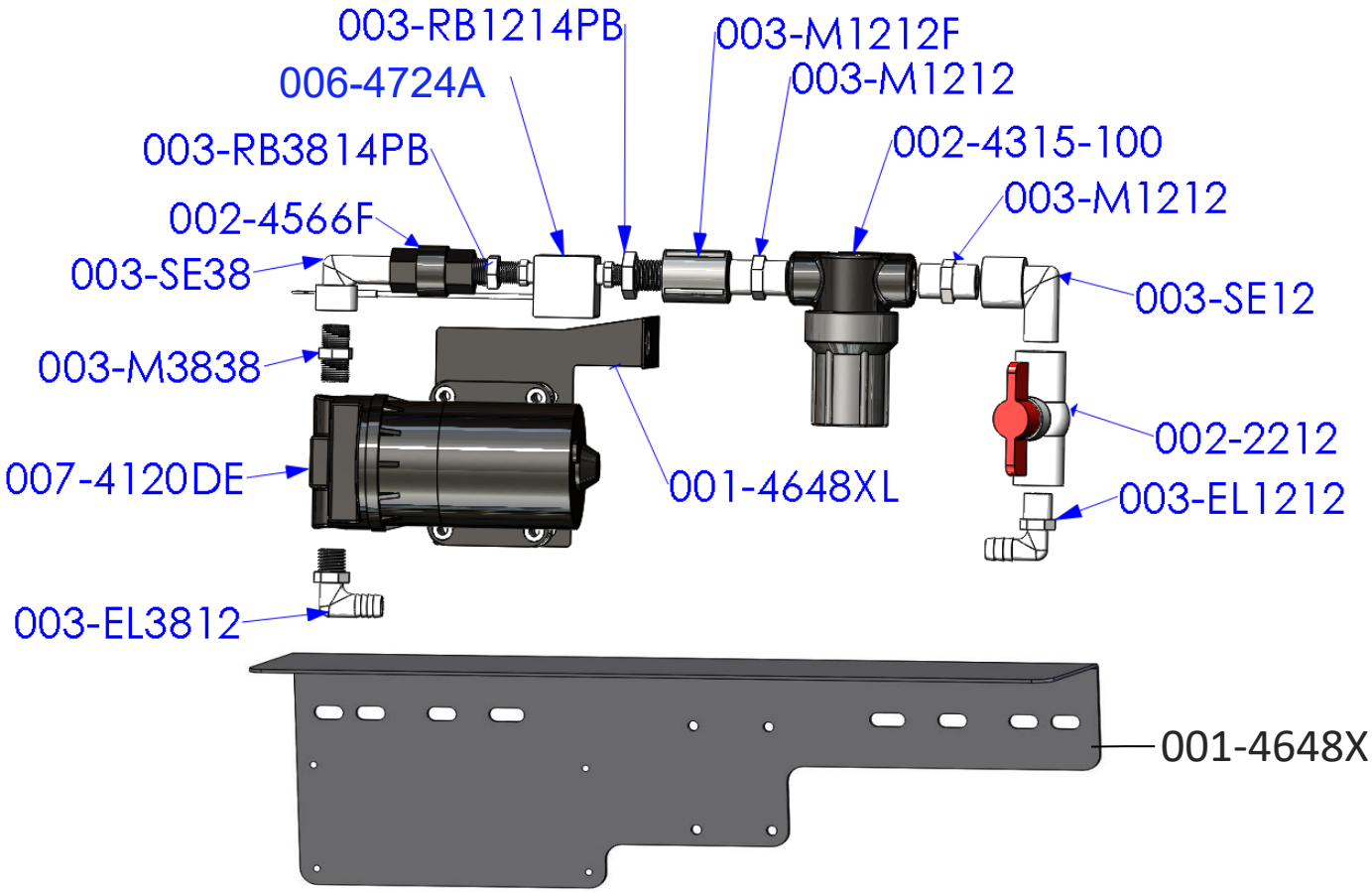


| Part# | Description | Qty | Part# | Description | Qty |
|---|---|---|---|---|---|
| 003-EL3812 | 3/8”MPT x 1/2"HB Elbow | 1 | 003-M1212F | 1/2" Coupler | 1 |
| 003-A3812 | 3/8”MPTx1/2"HB Straight | 1 | 003-M1212 | 1/2" Union | 2 |
| 007-4120DE | 700/300 Series Pump | 1 | 002-4315-100 | 1/2" Line Strainer-100 Mesh | 1 |
| 003-M3838 | 3/8” x 3/8” Union | 1 | 003-SE12 | 1/2" Street Elbow | 1 |
| 003-SE38 | 3/8” Street Elbow | 1 | 002-2212 | 1/2" Ball Valve | 1 |
| 002-4566F | 3/8” Check Valve | 1 | 003-EL1212 | 1/2" MPT x 1/2"HB Elbow | 1 |
| 003-RB3814PB | RB 3/8” x 1/4” Reducer | 1 | 003-A1212 | 1/2” MPT x 1/2" HB Straight | 1 |
| 006-4724A | Flow Meter – Block Style | 1 | 001-4648XL | Pump Support Bracket | 1 |
| 003-RB1214PB | RB 1/2" x 1/4" Reducer | 1 | 001-4648X | Pump Plate Mount | 1 |

*Note: Due to alternative baler designs, elbow (003-EL3812) can be replaced by straight fitting (003-A3812). Or, elbow (003-EL1212) can be replaced by straight fitting (003-A1212). Both straight fittings are included.

## Completed Assembly – PMP-7636P

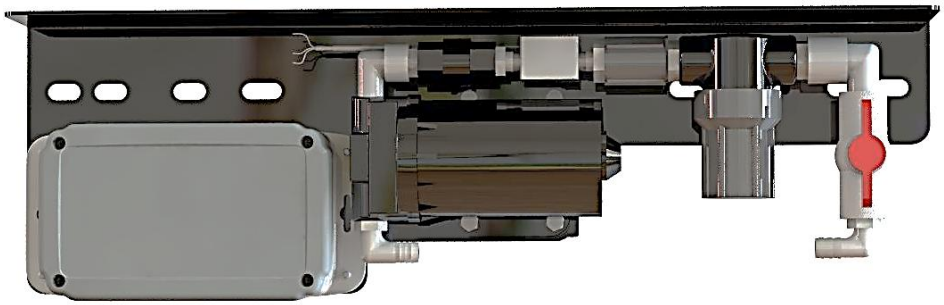

# Pump Plate Assembly (PMP-7636P)

**Installation** The Pump Plate Assembly (PMP-7636P) is used with all 700 series Auto Applicator systems and mounts to various balers. Use the appropriate mounting location for the model system version:

### Model 731 Applicators:

Locate parts bag 8 and Pump Assembly. Attach Pump Plate Assembly to the tank saddle frame (001-4705B) using the predrilled holes and two 3/8” x 1-1/4” bolts, locks and flat washers to attach pump plate to tank saddle as shown.

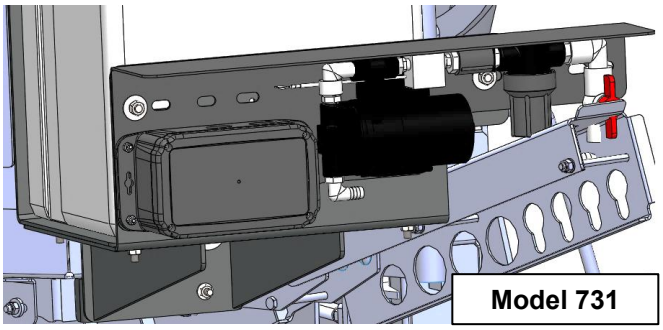


### Model 746 Applicators:

Locate parts bag 8 and Pump Assembly (PMP-7636P). Attach pump plate assembly to the tank saddle using the pre-installed Pump Plate Mounting Bracket (001-4647) and two of the supplied 3/8” x 1-1/4” bolts, locks, and flat washers.

### Model 747 Applicators:

Locate parts bag 8 and Pump Assembly (PMP-7636P). Using two 3/8” x 1-1/4” bolts, locks, and flat washers to the saddle, mount the pump assembly to the tank saddle (001-4445A) as shown.

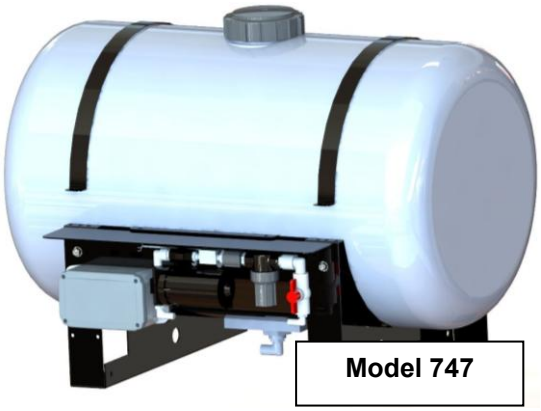


### Model 749 Applicators:

Locate parts bag 8 and pump assembly (PMP-7636P). Using two 3/8” x 1-1/4” bolts, locks, and flat washers, mount the pump plate assembly to the tank legs (001-4703B) as shown.

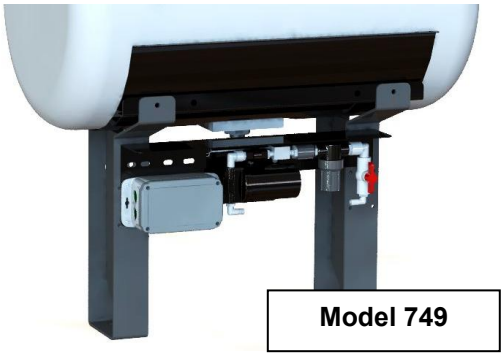

# Spray Shield Assembly

**Placement and Installation:** Harvest Tec Applicator systems use spray shield assemblies that are specifically designed for various baler models. Refer to the Install Kit number for your baler and applicator system for the specific placement and installation instructions of the spray shield assembly.

## Install Kits 4481X, 4482X, 4483X, 4484X, 4486X, 4504X, 4505X or 4481, 4482, 4483, 4484, 4486, 4504, 4505

### Placement - Auto Shield Kit (030-7714J-SO) or Electronic Spray Shield

The cross bar (**For 4481X and 4481 kits only: if baler is equipped with roller wind guard, see additional instructions below*) on the wind guard above the pick-up head provides a mounting point for the nozzle holders (001-4714J). Mount the nozzle holders on the wind guard, using the supplied U bolts (001-4714UBS). Measuring from the center of the baler, the nozzle holders will need to be 6” (15cm) apart on a 4’ (1.2M) and 9” (23cm) apart on a 5’ (1.5M) Do not fully tighten.

Position the nozzle holders so that the tips spray in a horizontal direction over the top of the baler’s pickup. The tips should be located so that they will be between 14” and 18” (35 - 45 cm) from the normal path of hay. Make sure the nozzle holders do not interfere with the tying system. *It is recommended to test the system with water prior to field operation. This will ensure the fan pattern from the tips reaches the outside edges of the pickup while having a slight overlap in the center.

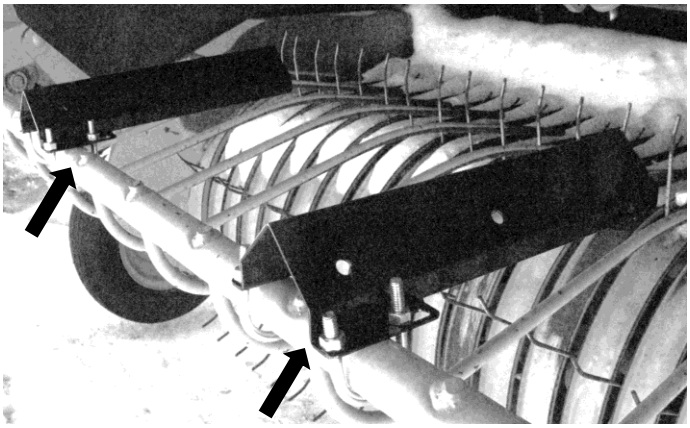

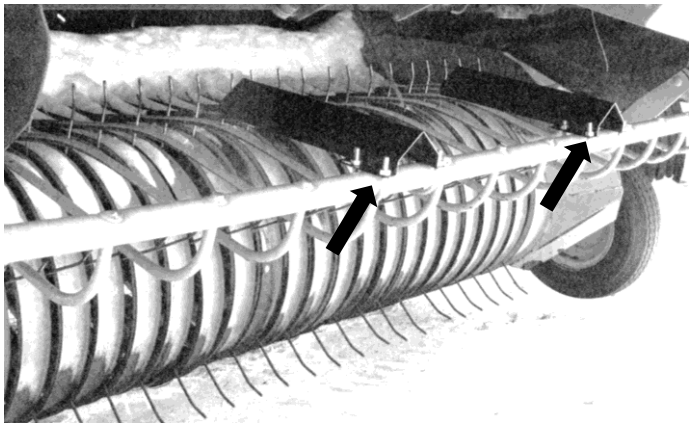

***For balers equipped with Roller Wind Guard only (Install kits 4481X or 4481)***

Locate the spray nozzle tube holder (001-4703TP), Figure 1. Situate the holder on the baler tongue, using the bottom pre-drilled hole to line up with the top hole on the pipe holder bracket (001-4703TH), Figures 2 and 3. Mark the location on the second hole down on the pipe holder bracket and drill a 5/16” (8mm) hole on both sides of the baler tongue. Attach the holder using two 3/8” x 1” bolts, locks, flats, and nuts. Mount the nozzle holders on the wind guard, using the supplied U bolts (001-4714UBS). Measuring from the center of the baler, the nozzle holders will need to be 6” (15cm) apart on a 4’ (1.2M) and 9” (23cm) apart on a 5’ (1.5M) Do not fully tighten until final placement has been determined and checking for pickup clearance.

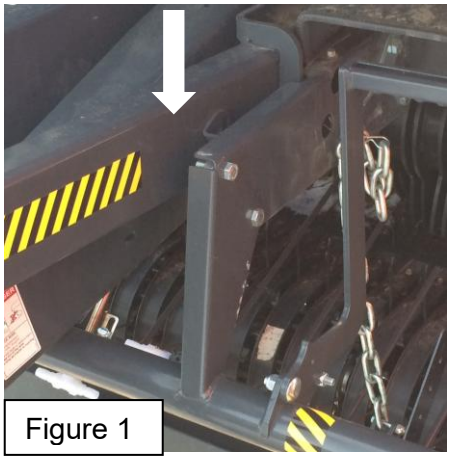

Figure 1

Figure 2

Figure 3

# Install Kit 4503X or 4503

### Placement - Auto Shield Kit (030-7714JS-SO) or Electronic Spray Shield

The top cross bar above the full-shielded wind guard provides a mounting point for the short nozzle holders (Figure 1). The nozzles will point towards the baler, and a notch may need to be cut on the lip of the full-shielded wind guard for clearance of the elbow. Space the nozzles by the chart below:

| PICK-UP HEAD WIDTH | LEFT SIDE (Use plugged fitting) | CENTER (Use 2-way fitting) | RIGHT SIDE (Use 2-way fitting) |
|---|---|---|---|
| 48” (121cm) | 12” from left (30cm) | Center | 12” from right (30cm) |
| 60” (152cm) | 14” from left (35cm) | Center | 14” from right (35cm) |
| 72” (180cm( | 15” from left (38cm) | Center | 15” from right (38cm) |

Figure 1

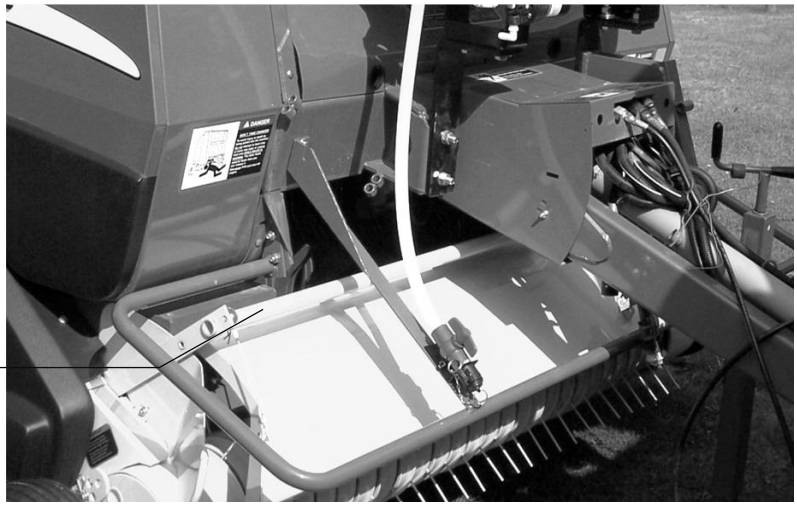

Mount the nozzle holders (001-4714JS) on the wind guard, using the supplied U bolts (001-4714UBS). Measuring from the center of the baler, the nozzle holders will need to be 6” (15cm) apart on a 4’ (1.2M). Do not fully tighten until final placement and angle is determined for optimal spray coverage.

# Install Kit 4508X or 4508

### Placement - Auto Shield Kit (030-4508X-SO) or Electronic Spray Shield

Locate the spray shield assembly (030-4508B). Fit shield with tips facing down onto the baler as shown below with the shield hangers (001-4703JB). Mark both sides of the shield (only mark one hole per side) and drill a 3/8” hole to allow the shield to be bolted to the baler using 3/8” x 1 1/2" bolts, locks, nuts, and flat washers. Remove the spray shield from the mounting brackets to install. Attach hoses to shield before installing on bracket (see installation of plumbing).

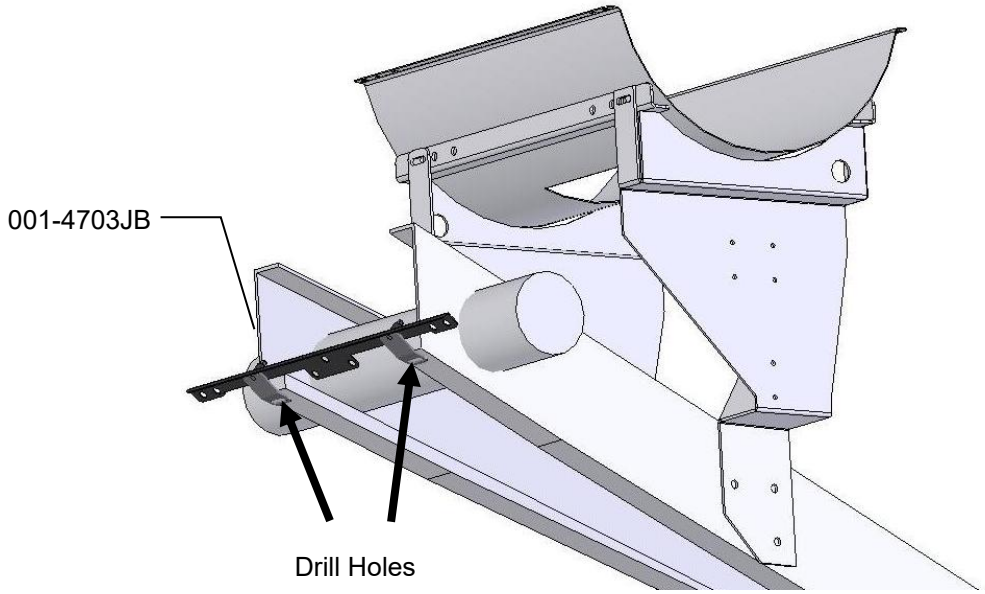


Locate the spray shield assembly (030-4508B). Fit shield with tips facing down onto the baler as shown below with the shield hangers (001-4703JC). The shield hangers will be positioned on the sheet metal between the balers tongue and belts. The shield hangers should be positioned so that the bottom of the sheet metal is aligned with the bottom of the bend below the mounting holes and on the tongue side of the sheet metal. Mark both sides of the shield hangers (two holes per side) and drill four 3/8” (10mm) holes to allow the shield to be bolted to the baler using 3/8” x 1 1/2" bolts, locks, nuts, and flat washers. Remove the spray shield from the mounting bracket to install. Attach hoses to shield before installing on bracket (see installation of plumbing).

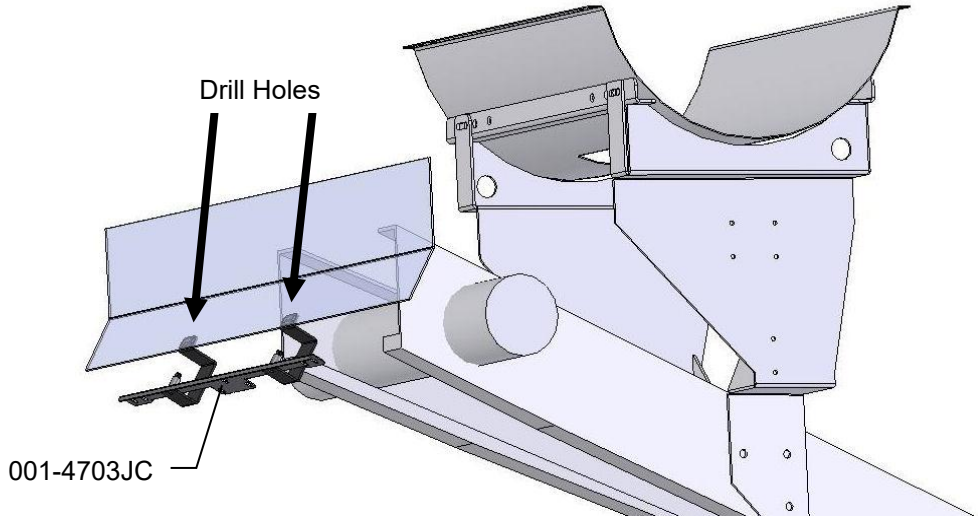

# Install Kits 4516X, 4517X or 4516, 4517
## Uses Shield Mounting Kit (SMK-4516)

### Placement - Auto Shield Kit (030-7714J-SO) or Electronic Spray Shield Kit (030-4516-SO)

***For Twine and Net Balers:***

Locate the four flange head bolts where the baler hitch bolts to the bottom side of the baler frame. Remove the two outside bolts. Attach the spacers (001-4703NS) to the **hitch side** of the baler frame. Use original hardware to secure. Attach the nozzle holder (001-4703R) to the spacers with the supplied M16 x 40mm flange bolts and nuts. Attach the nozzle mount (001-4714J) to the nozzle holder (001-4703R) with 5/16” U bolts, locks, and nuts. Measuring from the center of the pickup, the nozzle holders should be about 6” apart for 4’ (1.2M) wide balers and 9” (23cm) apart for 5’ (12.5cm) wide balers. Do not fully tighten. Lift the roller baffle and position the end of the nozzle holder bracket so the tips are just above the roller baffle (if equipped) when it is lifted to its highest point. Tighten all hardware and attach the hoses.

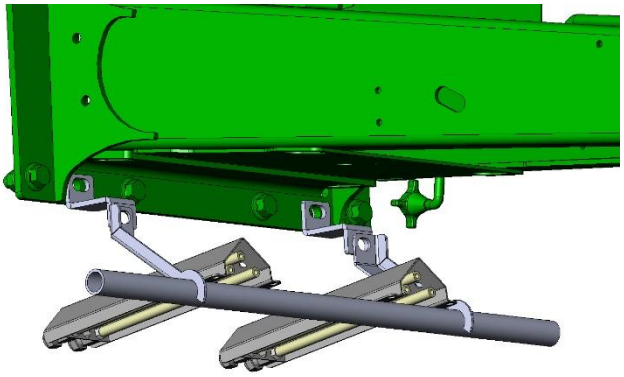

***For Net Only Balers:***

Locate the four flange head bolts where the baler hitch bolts to the bottom side of the baler frame. Remove the two bolts. Attach the spacers (001-4703NS) to the **chamber side** of the baler frame. Use original hardware to secure. Attach the nozzle holder (001-4703R) to the spacers with the supplied M16 x 40mm flange bolts and nuts. Attach the nozzle mount (001-4714J) to the nozzle holders (001-4703R) with 5/16” U bolts, locks and nuts. Measuring from the center of the pickup, the nozzle holders should be about 9” (23cm) apart with bracket **A** as close to the V-shaped stop as possible. Do not fully tighten. Lift the roller baffle (if equipped) and position the end of the nozzle holder bracket so the tips are just above the baffle when it is lifted to its highest point. Tighten all hardware and attach the hoses.

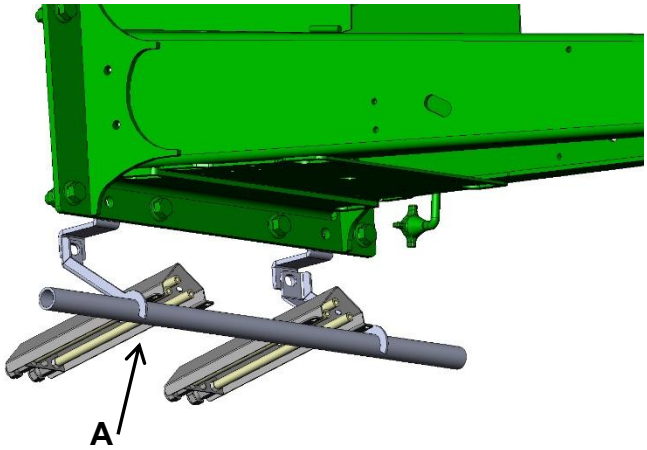

# Install Kits 4523X, 4531X, 4543X or 4523, 4531, 4543

### Placement - Auto Shield Kit (030-4523X-SO) or Electronic Spray Shield Kit (030-4523-SO)

Locate the spray shield (001-4704G) and spray shield hangers (001-4704H). Mount the spray shield above the pickup reel and directly in front of the rotor on the baler. Use the two existing holes to mount the shield using four 3/8” x 1-1/2” bolts, locks, flats, and nuts. Tighten all hardware.

***Note- For 4531X and 4531 kits:***
Use Hanger Extender (001-4704HZ), one on each side, to attach the spray shield to the baler.

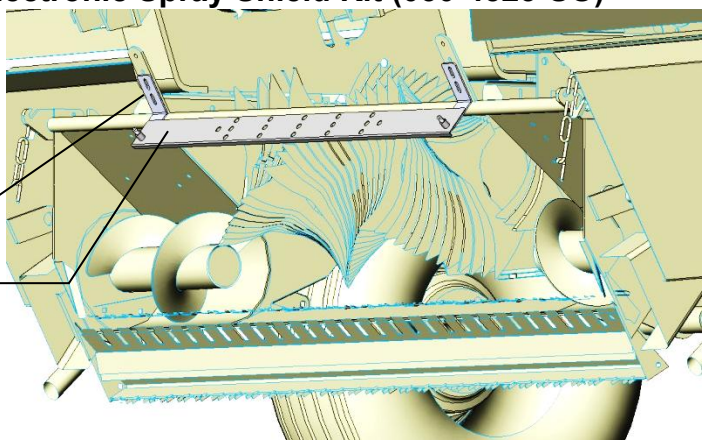


# Install Kit 4524X or 4524
## Uses Shield Mounting Kit (SMK-4524)

### Placement - Auto Shield Kit (030-7714J-SO) or Electronic Spray Shield

Locate the spray nozzle holder (001-4703T). Situate the holder, centered on the baler sheet metal and mark one hole per side. Drill two 5/16” (8mm) holes and attach the holder using two 3/8” x 1” bolts, locks, flats, and nuts. Install one nozzle tube in the center.

The two remaining nozzle tubes, will mount 1” (25mm) in from each end. Do not fully tighten. Position the nozzle tubes so that the tips will be 14”-18” (35-45cm) away from the normal path of hay. Tighten the nozzle tubes to the nozzle holder.

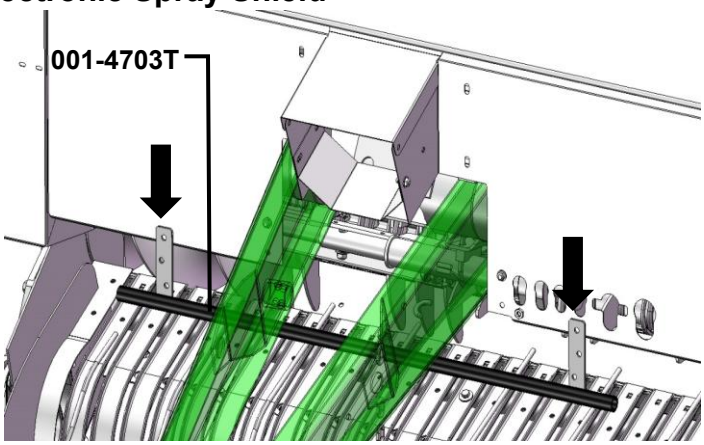

# Install Kit 4526X or 4526

### Placement - Auto Shield Kit (030-4526X-SO) or Electronic Spray Shield

Locate the spray shield (001-4704G) and spray shield hangers (001-4704MC). Mount the spray shield above the pickup reel as shown below. Attach the shield to the baler using the supplied two 3/8” x 1-1/2” bolts, locks, flats and nuts. Tighten all hardware.

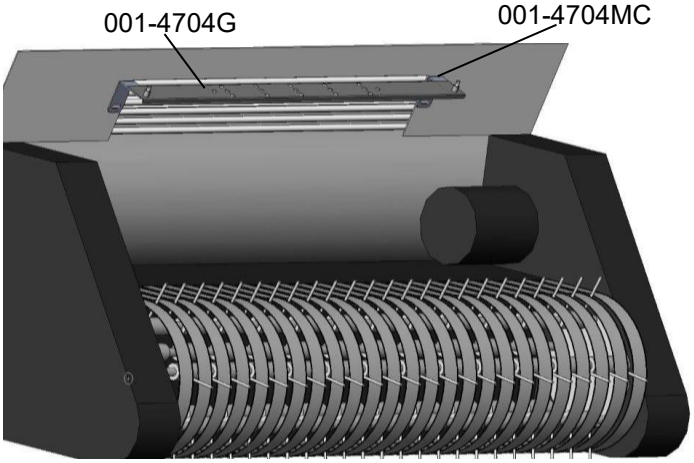


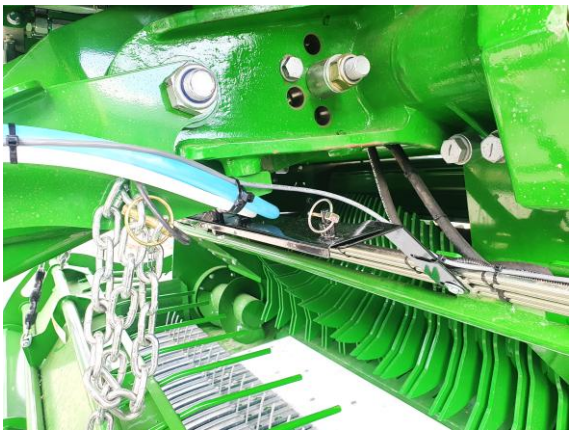

# Install Kit 4538X or 4538
## Uses Shield Mounting Kit (SMK-UNIV-PIPE)

### Assemble (SMK-UNIV-PIPE) and Auto Spray Shield (030-7714JS-SO) or Electronic Shield

Attach the nozzle tube pipe (001-4703TP) to the pipe mounting brackets (001-4703TH) with the supplied U Bolts. Do not tighten U-bolts, to allow mounting brackets to move. Attach the nozzle mounts (001-4714JS) to the nozzle tube pipe with U-bolts and secure. The nozzle mounts should be about 6” (12.5cm) apart for 4’ (11cm) wide balers and 9” (23cm) apart for 5’ (12.5cm) wide balers.

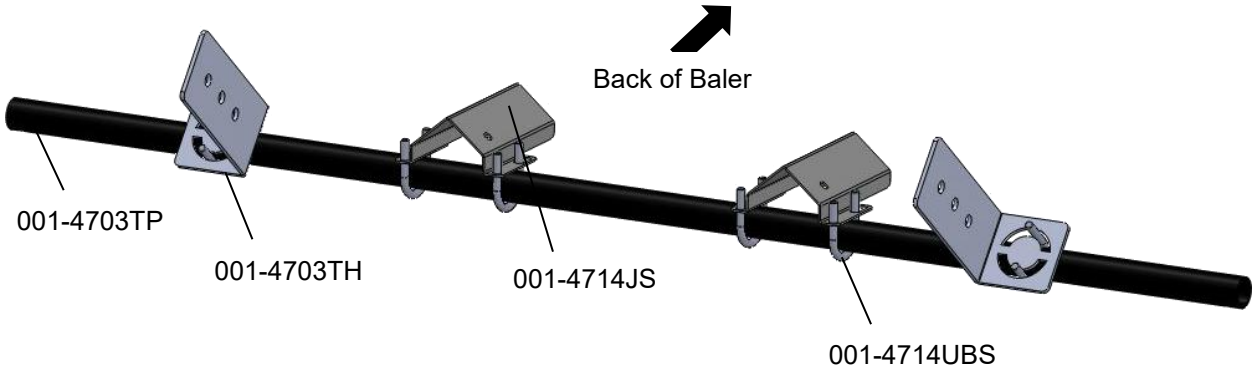


### Attach Spray Bar Assembly

Position mounting brackets (001-4703TH) on the baler tongue above the pick-up as shown (Figure 1) at roughly a 45 degree angle. If your baler is equipped with a roller wind guard, the angle may need to be slightly adjusted to allow clearance and proper coverage of the preservative being applied to the incoming crop. When the exact mounting position has been determined on both sides of the tongue, drill two 3/8” (10mm) holes and secure mounting brackets using four 3/8” x 1 1/4” bolts and hardware in parts bag 7. Ensure that the nozzle mounts (001-4714JS) are pointed toward the back of the baler.  Side view of the mounting bracket and the nozzle pipe from the left side of the baler (Figure 2).

*Ensure pickup raises and lowers without damaging spray bar assembly.

Figure 1

Figure 2

# Install Kits 4547X, 4646X or 4547, 4646

**Placement - Auto Shield (030-4546X-SO) or Electronic Spray Shield**

Locate Spray Shield (001-4435NSX) and Shield Holder (001-4435NCX2). Position the assembly over the center of the pickup and secure the shield holder to the cross-bar support as shown (picture at right) using the two 2” U-bolts (001-4714UBX) included with the kit.

Attach the spray shield to the shield holder as shown below by using the two lynch pins provided (008-4576).

Position and adjust the angle of the spray shield so the preservative will spray in front of the rotating pre-cutter. Test with water, adjust as needed. Fully secure all hardware once proper angle has been determined.

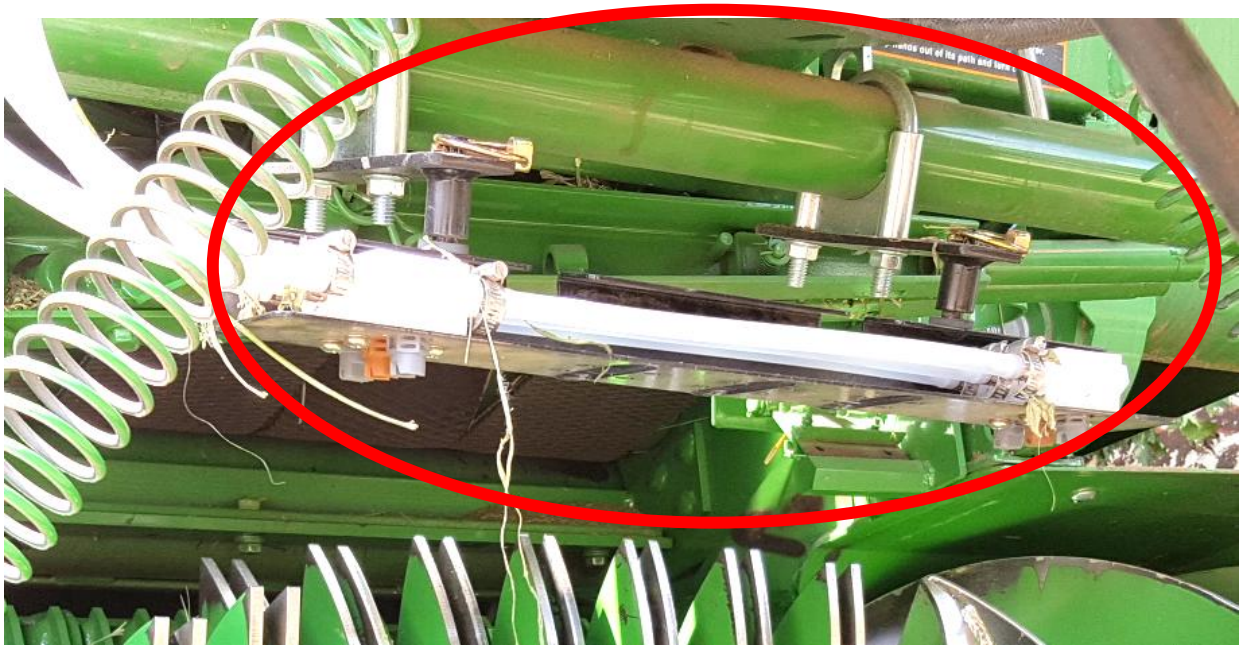

# Install Kit 4549X or 4549
## Uses Shield Mounting Kit (SMK-4549)

### Placement - Auto Shield (030-7714J-SO) or Electronic Spray Shield

Locate the four factory flange head bolts where the baler hitch bolts to the bottom side of the baler frame. Remove the two outside bolts. Attach Spacer Brackets (001-4703NV) to the **hitch side** of the baler frame using the original baler hardware to secure.

Attach Nozzle Holder Tube (001-4703R) to the spacer brackets using the supplied 1/2" x 1 1/2" bolts, washer, lock washers and nuts. Attach the Nozzle Mounts (001-4714J) to the Nozzle Holder Tube (001-4703R) using supplied 5/16” U bolts, locks, and nuts. Place nozzle mounts about 6 inches apart for 4-foot-wide balers or about 9” apart for 5-foot-wide balers (1.5M). Do not fully tighten. Lift the baler’s roller baffle and position the end of the nozzle holder bracket so the tips are just above the roller baffle (if equipped) when it is lifted to its highest point. Tighten all hardware and attach hoses to spray nozzles.

# Install Kit 4555X or 4555
## Uses Shield Mount Kit (SMK-UNIV-PIPE)

### Placement – Auto Shield (030-4555X) or Electronic Spray Shield (030-4555)

Attach the Nozzle Tube Brackets (001-4703TH) to the Nozzle Tube Pipe (001-4703TP) using two of the supplied U-bolts (001-4714UBS). Position the longer flange (3 holed portion) of the holder brackets up against the bottom of the baler tongue on each side, positioning the bend in the holder bracket against the gusset on the bottom side of the tongue. Center the holder brackets on the bottom side of the tongue on each side rail, and clamp in place. Mark and drill at least one mounting hole per side. Bolt holder brackets securely to bottom side of tongue.

Attach the Nozzle Tube assemblies (001-4714) to the nozzle pipe using U-bolts (001-4714UBS). Space the nozzles so there is a 50% center overlap from each spray nozzle and aim the nozzle tubes so that the spray is directed towards the bottom of the packer fingers. Tighten bolts securely after proper spacing and aiming has been determined. Excess length of nozzle pipe (001-4703TP) can be cut off at installer's discretion.

# Install Kit 74725, 74755 or 44225, 44255

**Placement of – Auto Shield (030-074725-SO) or Electronic Spray Shield (030-0442-SO)**
Locate parts bag 10. Four 1/2" (13mm) holes will need to be drilled to mount the Shield Holder (001-4810BRH) to the baler (Figure 1). The location is directly above the baler's pickup. Mount the spray shield holder using four 5/16" x 1 1/2" bolts, locks, flats, and nuts. Attach the Spray Shield (001-4810B) to the holder using the two supplied lynch pins. Spray nozzles are set towards the outside edges for 5' wide balers, and towards the center for 4' wide balers (Figure 2).

If baler is equipped with a bale slice: contact local dealer or Harvest Tec for optional spray shield hanger brackets (001-4703BR).

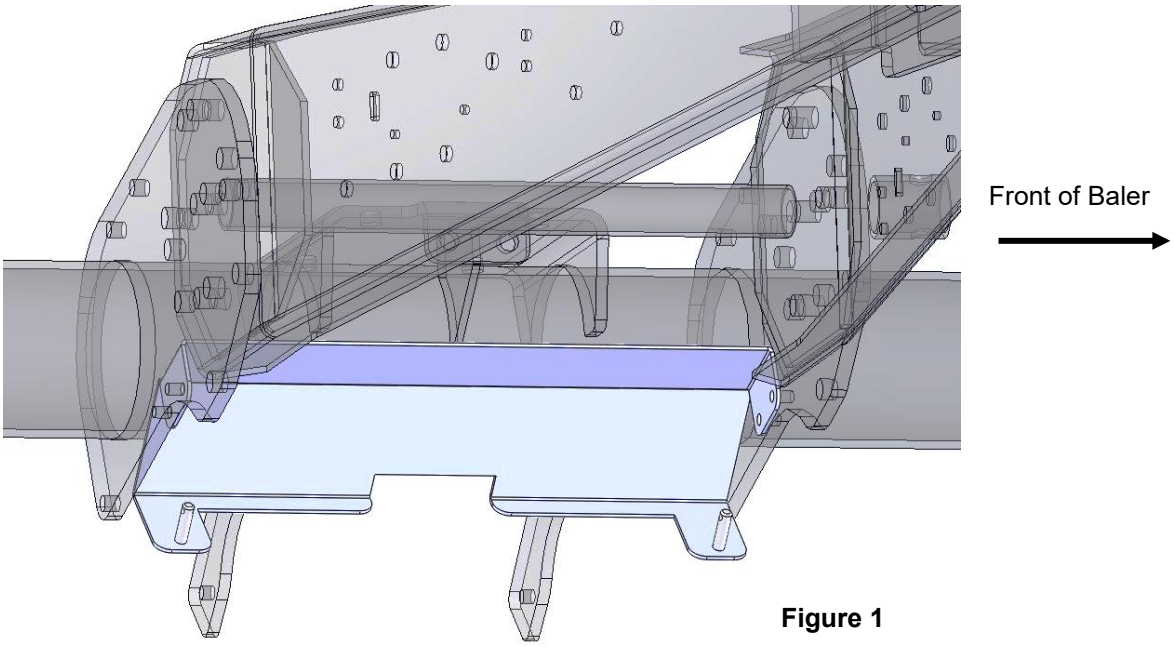


**Figure 1**

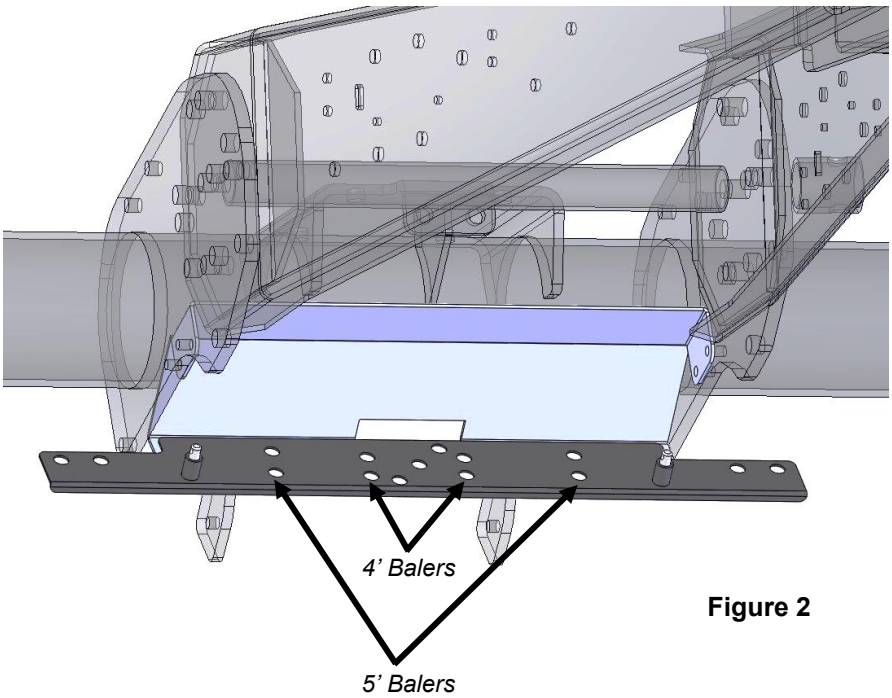


**Figure 2**

# Plumbing, Solenoid and Tip Outputs

## A. Intake Line

Locate parts bag 16. Use the 003-EL3412 on the bottom of the tank to route 1/2" line (002-9001) to the 003-A1212 or 003-EL1212 fitting used on the ball valve attached to the pump plate. Attach hose clamps (003-9003) on both of the fittings.

## B. Discharge Line

Route the 1/2" hose from the pump output toward the front of the baler to connect to the solenoid assembly (SOL-3SP-A).

## C. Solenoid Assembly Installation

The Pulsing Solenoid is installed at the transition from the 1/2" hosing from the pump discharge line and the 1/4" line to supply the spray nozzles. Transition should be as close to the spray tips as possible. The best suited placement for this transition is a location where the solenoid can be placed in a horizontal position in-line with the hoses and clear of the pickup and any moving parts. This location is to be determined at the discretion of the installer. (See example).

Be sure to provide ample hose length to allow for full range of motion of the pickup head if spray tips move with pickup- too short of hose may cause hosing to pull out or break connections when pickup head is lowered.

Attach straight fitting (003-A1412) into end of 1/2" hose from the pump and secure with hose clamp (003-9003). Thread connector (004-1207G) onto fitting and place rubber washer (004-1207W) into quick disconnect (004-1207H). Connect to inlet side to the solenoid valve body (004-1207VF). Attach quick disconnect from spray nozzles/shield to outlet side of solenoid valve body, with rubber washer inside the quick disconnect.

Attach Solenoid Harness to Solenoid and route harness to connect with main baler harness. Secure Solenoid Harness to baler with zip ties away from any moving parts and pinch points.

## D. Solenoid Maintenance

Check before use for any cracks or leaks in fittings- replace as necessary. The center section of valve body may need to be cleaned if solenoid does not pulsate when power is supplied by applicator. See breakdown for cleaning instructions. Components are compatible with Harvest Tec Buffered Propionic Preservative and use of other products may cause an increased need for service or replacement.

## E. Standard and High Output Tips

Your baler comes with a standard tip set.
-Standard tip set will cover outputs of 48-448 lbs/hr (21-203 L/hr).
-High (Optional*) set will cover outputs of 80-800 lbs/hr (36-363 L/hr).
*Addition of the High Output Kit (700RBHTK) is required to run the system in High tips level setting.

# 700 Pulsing Solenoid Breakdown - Round Balers

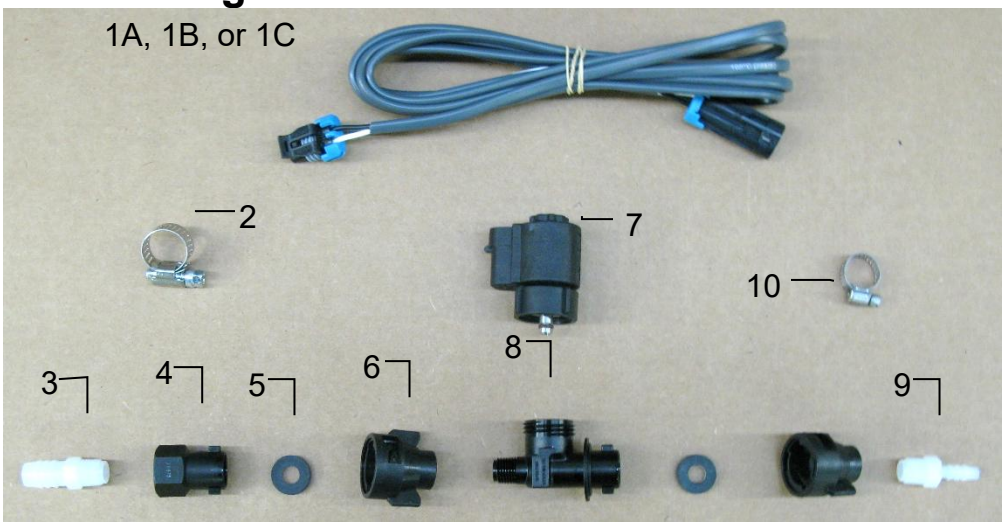


| Ref | Description | Part # | Qty |
|---|---|---|---|
| 1A | Solenoid Harness (5') | 006-3650-S1 | |
| 1B | Solenoid Harness (10') | 006-3650-S2 | |
| 1C | Solenoid Harness (15') | 006-3650-S3 | |
| 2 | #6 Hose Clamp | 003-9003 | 1 |
| 3 | 1/4"x1/2" Straight Fitting | 003-A1412 | 1 |
| 4 | 1/4" Female Connector | 004-1207G | 1 |
| 5 | Rubber Washer | 004-1207W | 2 |

| Ref | Description | Part # | Qty |
|---|---|---|---|
| 6 | 1/4" Female Disconnect | 004-1207H | 2 |
| 7 | Solenoid | 002-2203F | 1 |
| 8 | Solenoid Valve Body | 004-1207VF | 1 |
| 9 | 1/4" x 1/4" Straight Fitting | 003-A1414 | 1 |
| 10 | Mini Hose Clamp | 003-9002 | 1 |

**Solenoid Packages**

| | |
|---|---|
| Complete Assembly Pkg. A | SOL-3SP-A |
| Complete Assembly Pkg. B | SOL-3SP-B |
| Complete Assembly Pkg. C | SOL-3SP-C |

## Expanded View of Pulsing Solenoid (002-2203F)

Replacement Pulsing Solenoid O-Ring Kit available (002-2203FG)
(Includes EPDM O-Rings 6, 8, 9 shown below)

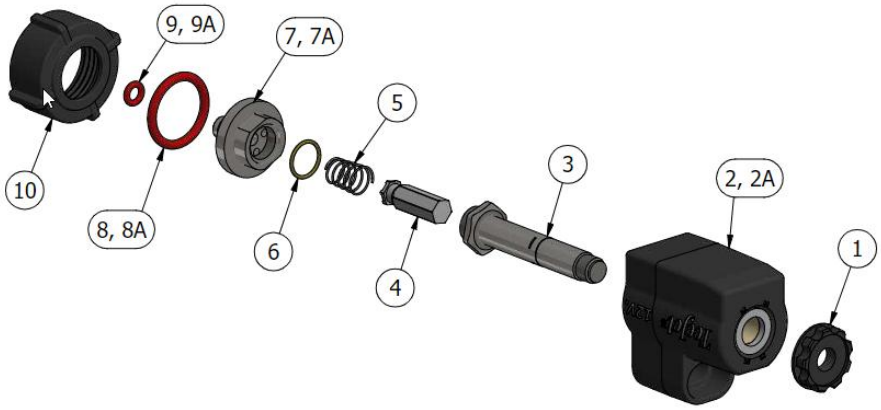


**To Clean Solenoid Valves:**
The Center Section can be removed from Housing #2 by loosening #1 from #3. Once removed, use wrenches on components #3 and #7 and gently turn to loosen and separate. Soak parts #3-10 in warm soapy water, clean with a soft bristle brush, rinse with clean water to remove buildup before reassembly.

# High Output Tip Kit – 700RBHTK
## For Optional use with 700 Series Round Baler Applicators

### Solenoid Installation

Locate solenoid on current system and connect 1/4" Tee (003-TT14) to the solenoid valve body (004-1207VF). Connect 1/4" x 1/2" straight fitting (003-A1412) to opposite end of the tee, in line with valve body. 1/2" hose from the pump will connect to this straight fitting.

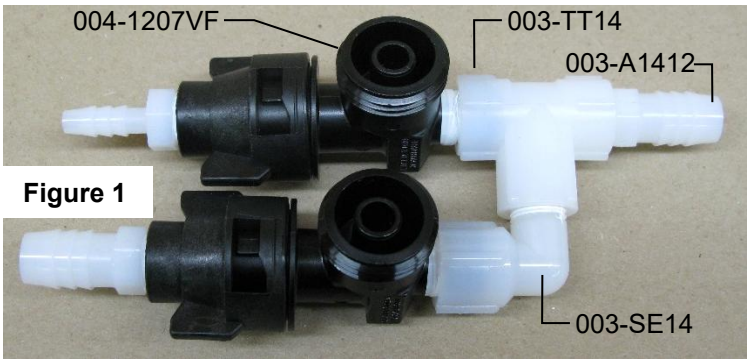

Figure 1

Attach 1/4" street elbow (003-SE14) to the open tee end. Connect the second solenoid valve body to the 1/4" street elbow. Connect female quick coupler (004-1207H) to solenoid valve body. Washer (004-1207W) must be properly seated inside coupler fittings before connected to solenoid valve body. Second 1/4" x 1/2" straight fitting (003-A1412) attaches to female quick coupler. Solenoid valve bodies should now look similar to Figure 1.

Attach 1/2" hose (002-9001) to the 1/4" x 1/2" straight fitting (003-A1412) from the 700RBHTK. Install the original solenoid and the new solenoid (002-2203F) to solenoid valve bodies as shown in Figure 2.

Reconnect solenoid harness (006-3650-S2) to the original solenoid (SOL 1). Ensuring that the opposite end of the harness is connected to the 'Sol 1' connection on the baler harness.

Connect solenoid harness (006-3650-S2) from 700RBHTK kit to the new solenoid (SOL 2) and connect the opposite end to the 'Sol 2' connection on the baler harness.

Figure 2

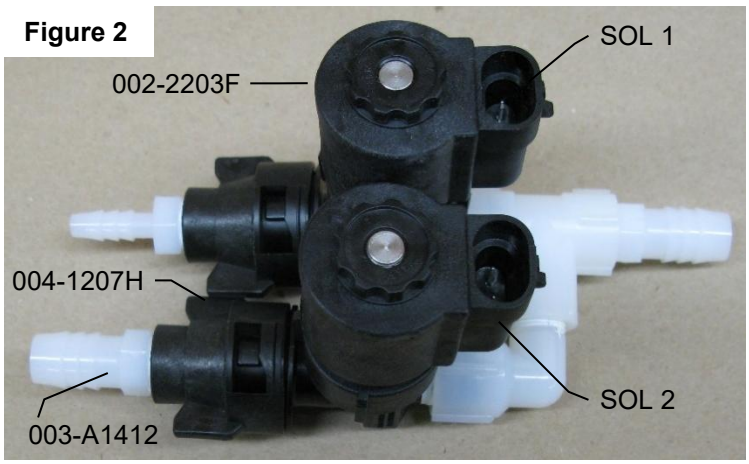


### Tip Installation

The 700RBHTK kit includes two different tip styles. Locate the tips that are the same style used with current system. Non-threaded tips will require use of the additional tip mounting components.
*Example: nozzle body (004-4722), tip screens (004-1203-100), white Tip (004-XR11008VS), and nozzle body cap (004-4723) will be used together to make one tip assembly.*

***Note:** The 700RBHTK containing parts to fit all styles of round baler 700 Auto Applicator kits. Not all tip components of this kit will be used. Refer to parts breakdown for all parts included with kit.

#### Balers with Manifold Blocks

Remove Spray manifold blocks (001-4435NSB) from any spray shield/mounting brackets and install straight fitting (003-A1412) to the open port that is to the inside of the original installed straight fitting. Install new tip (004-T8008-PT) into spray manifold block port on the same side as original tip. Place Allen Plug (003-F14A) in the remaining open port (in line with new spray tip). Remove and replace original manifold tip with lower output tip (004-T8004-PT). Reinstall spray block into original spray shield/mounting bracket location. Attach spray line from Sol 2 to the newly installed spray tip port on the manifold block.

# Optional High Output Tip Kit (continued)

## Balers with Spray Shields

Below is an illustration of the of a spray shield (Figure 4) showing where the original tips would be located on the 4’ and 5’ (1.2M and1.5M) balers, on the spray shield vertical holes.

Following the same setup currently on your baler for hose length, fittings, and tip style. Add in the additional high output tip (001-XR11008VS or 001-T8008-PT) into the additional mounting holes or on the spray manifold block of the spray shield.  Replace original system tips with supplied (001-XR11004VS or 001-T8004-PT) tips. Attach spray line from Sol 2 to the newly installed spray tips.

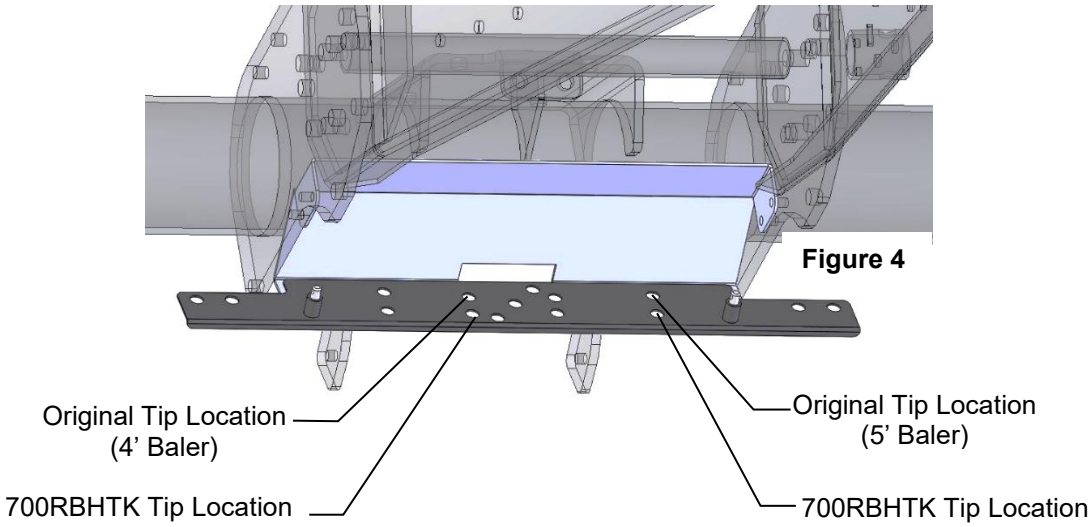


**Figure 4**

## Balers with V Bracket Nozzle Holders

Following the same setup currently on your baler for hose length, fittings, and tip style. Add the additional high output tip (001-XR11008VS) assembly into the additional mounting holes on the V shaped nozzle brackets (001-4714J). Replace original system tips with supplied (001-XR11004VS) tips. Attach spray line from Sol 2 to the newly installed spray tips.

Below is an illustration of the view from below the nozzle holders to show the original single tip setup (Figure 5) and the added Optional High Output Tip Kit (700RBHTK) installed (Figure 6).

**Figure 5**

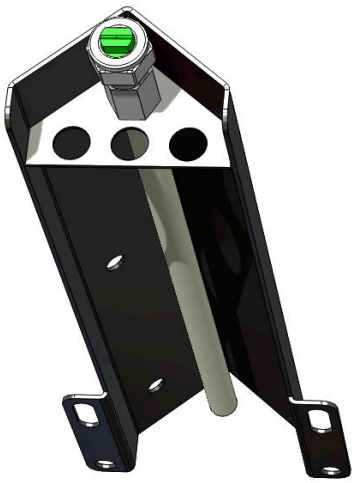

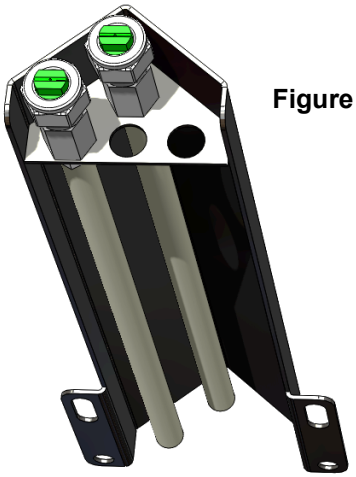

**Figure 6**

# Optional High Output Tip Kit

## 700RBHTK Breakdown

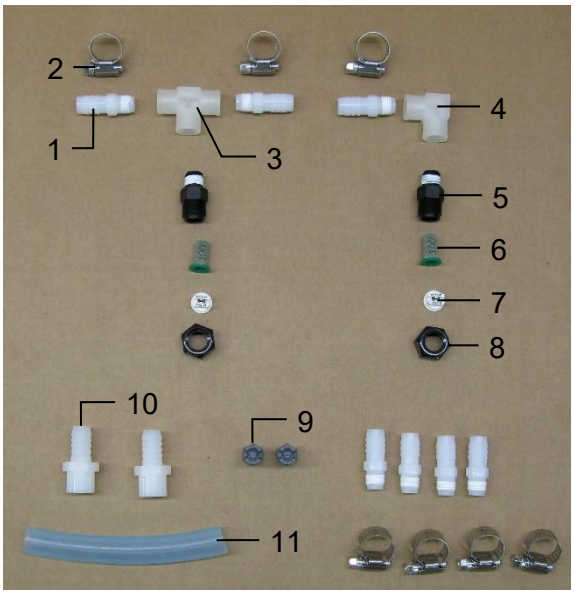


| Ref | Description | Part # | Qty |
|---|---|---|---|
| 1 | 1/4" x 1/2" Straight Fitting | 003-A1412 | 7 |
| 2 | #6 Hose Clamp | 003-9003 | 7 |
| 3 | 1/4” Tee | 003-TT14SQ | 1 |
| 4 | 1/4" Sq Elbow | 003-SE14F | 1 |
| 5 | Nozzle Body | 004-4722 | 2 |
| 6 | Tip Screens | 004-1203-100 | 2 |
| 7 | High Output Tip – White* | 004-XR11008VS | 2 |
| NP | Low Output Tip - Red* | 004-XR11004VS | 2 |
| 8 | Nozzle Body Cap | 004-4723 | 2 |
| 9 | High Output Tip* - NPT | 004-T8008-PT | 2 |
| NP | Low Output Tip* - NPT | 001-T8004-PT | 2 |
| 10 | 1/4" x 1/2" Sq Fitting | 003-A1412F | 2 |
| 11 | 1/2" Hose | 002-9001 | 6ft |
| NP | Plug | 003-F14A | 2 |

*Tip colors subject to change

# High Output Solenoid

## (Included with 700RBHTK Kit)

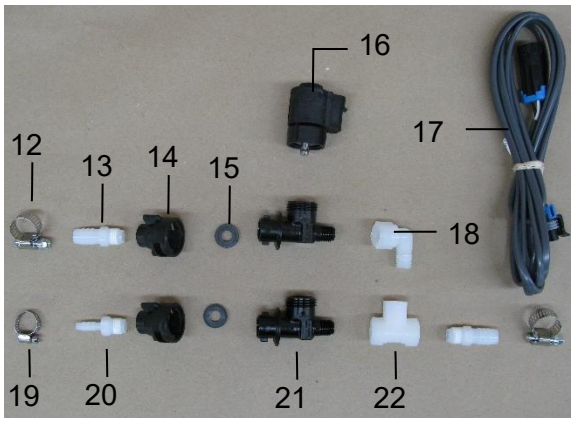


| Ref | Description | Part # | Qty |
|---|---|---|---|
| 12 | #6 Hose Clamp | 003-9003 | 2 |
| 13 | 1/4" x 1/2" Straight Fitting | 003-A1412 | 2 |
| 14 | Female Quick Coupler | 004-1207H | 2 |
| 15 | Rubber Washer | 004-1207W | 2 |
| 16 | Solenoid | 002-2203F | 1 |
| 17 | Solenoid Harness (10’) | 006-3650-S2 | 1 |
| 18 | 1/4" Street Elbow | 003-SE14 | 1 |
| 19 | Mini Hose Clamp | 003-9002 | 1 |
| 20 | 1/4" x 1/4" Straight Fitting | 003-A1414 | 1 |
| 21 | Solenoid Check Valve | 004-1207VF | 2 |
| 22 | 1/4" Tee | 003-TT14 | 1 |

# Moisture Sensor Kit Breakdowns

## (MSH-7RB-A) Round Discs

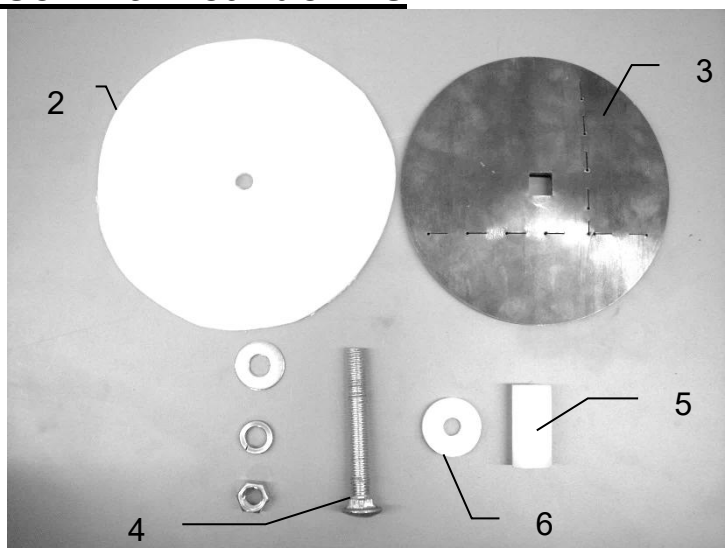


| Ref | Description | Part # | Qty |
|---|---|---|---|
| 1A | Moisture Harness (both cables 15') | 006-7307RB1 | 1 |
| 2 | Isolator Pad | 006-4641F | 2 |
| 3 | Moisture Disc | 006-4641H | 2 |

| Ref | Description | Part # | Qty |
|---|---|---|---|
| 4 | 1/2"x4 1/2" Carriage Bolt, Nut and Washers | Hardware | 2 |
| 5 | Sensor Bushing | 006-4641G | 2 |
| 6 | Plastic Isolator | 006-4641I | 2 |

Replacement Disc Assembly 030-4643
(qty 1 of each Ref 2-6)
**Complete Assembly A (Ref 1-6) MSH-7RB-A**

## (MSH-7RB-B/C) Shaped Discs

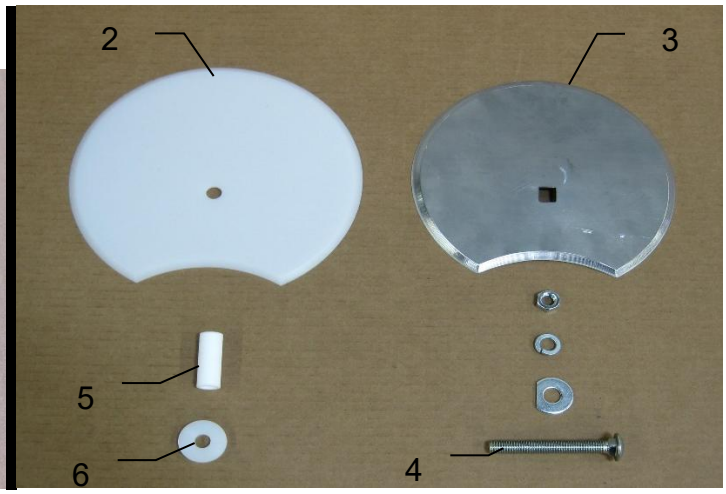


| Ref | Description | Part # | Qty |
|---|---|---|---|
| 1B | Moisture Harness (13' &16' Cables) | 006-7307RB2 | 1 |
| 1C | Moisture Harness (both cables 15') | 006-7307RB1 | 1 |
| 2 | RB Isolator Pad | 006-4641FX | 2 |
| 3 | RB Moisture Pad | 006-4641HX | 2 |

| Ref | Description | Part # | Qty |
|---|---|---|---|
| 4 | 1/2" x 4 1/2" Carriage Bolt Nut, and Washers | Hardware | 2 |
| 5 | Sensor Bushing | 006-4641G | 2 |
| 6 | Plastic Isolator | 006-4641I | 2 |

Replacement Disc Assembly 030-4643C
(qty 1 of each Ref 2-8)
**Complete Assembly B (Ref 1B-9) MSH-7RB-B**
**Complete Assembly C (Ref 1C-9) MSH-7RB-C**

# Moisture Sensor Kit

## General Installation – Refer to Installation Reference Chart below to locate the specific mounting instructions for your specific baler installation kit

Some factory moisture discs may be used with the Harvest Tec system as long as they are fully insulated from the baler (no metal on metal contact) and attach to the baler with a single bolt. Factory moisture system wires must be disconnected from both moisture sensor discs and taped up. The balers factory moisture system wires and the Harvest Tec moisture wires cannot be connected to the moisture discs at the same time. If no factory moisture discs are installed, follow the installation instructions for Harvest Tec Moisture Sensor Discs below.

Moisture disc assemblies must be mounted one on each side of the baler, directly across from each other.

Round moisture disc assembly (030-4643) have etched markings to follow if cutting modification is needed. Curve of moisture disc assembly (030-4643C) may be modified to adjust size of curved cutout, if needed. Plastic insulating discs should protrude 1/4" (7mm) wider than the modified sensor discs. Taper edges of modified discs and plastic pad to allow crop to smoothly pass over disc assembly.

| Moisture Disc Installation Reference Chart | | | | |
|---|---|---|---|---|
| **Install Kit #** | **Mtg. Option** | | **Install Kit #** | **Mtg. Option** |
| 4481X | A | | 735Z | I |
| 4482X | C | | 736K | B |
| 4483X | C | | 737 | A |
| 4484X | B | | 738K | A |
| 4486X | B | | 739K | B |
| 4503X | D | | 747C | A |
| 4504X | C | | 747P | A |
| 4505X | B | | 747U | B |
| 4508X | E | | 747UP | B |
| 4516X | C | | | |
| 4517X | C | | 74725 | B/H |
| 4523X | B | | 74755 | B/H |
| 4524X | F | | | |
| 4526X | A | | | |
| 4531X | H | | | |
| 4543X | G | | | |
| 4543X | B | | | |
| 4546X | C | | | |
| 4547X | C | | | |
| 4549X | B | | | |
| 4555X | B | | | |
| | | | | |

# Option A – Installation

## Moisture Sensor Disc Assembly (030-4643C)

1. Open rear tail gate of baler and lock in the up position. Refer to baler manual to lock door open.
2. Remove bale shaping discs on each side of chamber.
3. Place plastic isolator (006-4641FX) in the same spot that the shaping disc had been. There should be a hole in the baler that matches up with the hole in the plastic isolator, this hole will need to be drilled out to 3/4" (19mm). If there is not a hole, use the isolator as a template and mark the hole. Center punch the hole and drill it to 3/4" (19mm). Note: before drilling make sure you are not drilling into sensitive equipment on the outside of the baler). Repeat for other side of the baler.
4. Insert plastic bushing (006-4641G) from the outside of baler. Make sure it is flush with the outside of the baler frame. Go to the inside of the baler and mark amount that protrudes into the chamber. Remove and cut off excess material. Repeat for other side.
5. Using the 4” carriage bolt slide the parts on in following order: metal disc (001-4641HX), plastic isolator (006-4641FX) and shortened plastic bushing (006-4641G).
6. Insert disc assembly into 3/4” (19mm) hole from inside of bale chamber. Secure to outside of baler by attaching to the protruding carriage bolt in the following order: small isolator (006-4641I), 1/2” D shaped washer, 1/2” lock washer, 1/2” nut. Tighten down and repeat for the other side. Make sure no part of the bolt or hardware makes contact with the frame of baler-no metal to metal. Trim 006-4641I to fit.
7. Route moisture harness (006-2470RB) from drawbar down to the carriage bolt on each side. Make sure it does not come in contact with any moving parts. Secure with cable ties.
8. Attach moisture cable to moisture carriage bolt by placing items in the following order: 1/2” D shaped washer, Ring terminal of moisture harness (006-2470RB), second 1/2” D washer, 1/2” lock washer, 1/2” nut. Tighten down and repeat for other side. Make sure none of the hardware contacts the frame of baler.

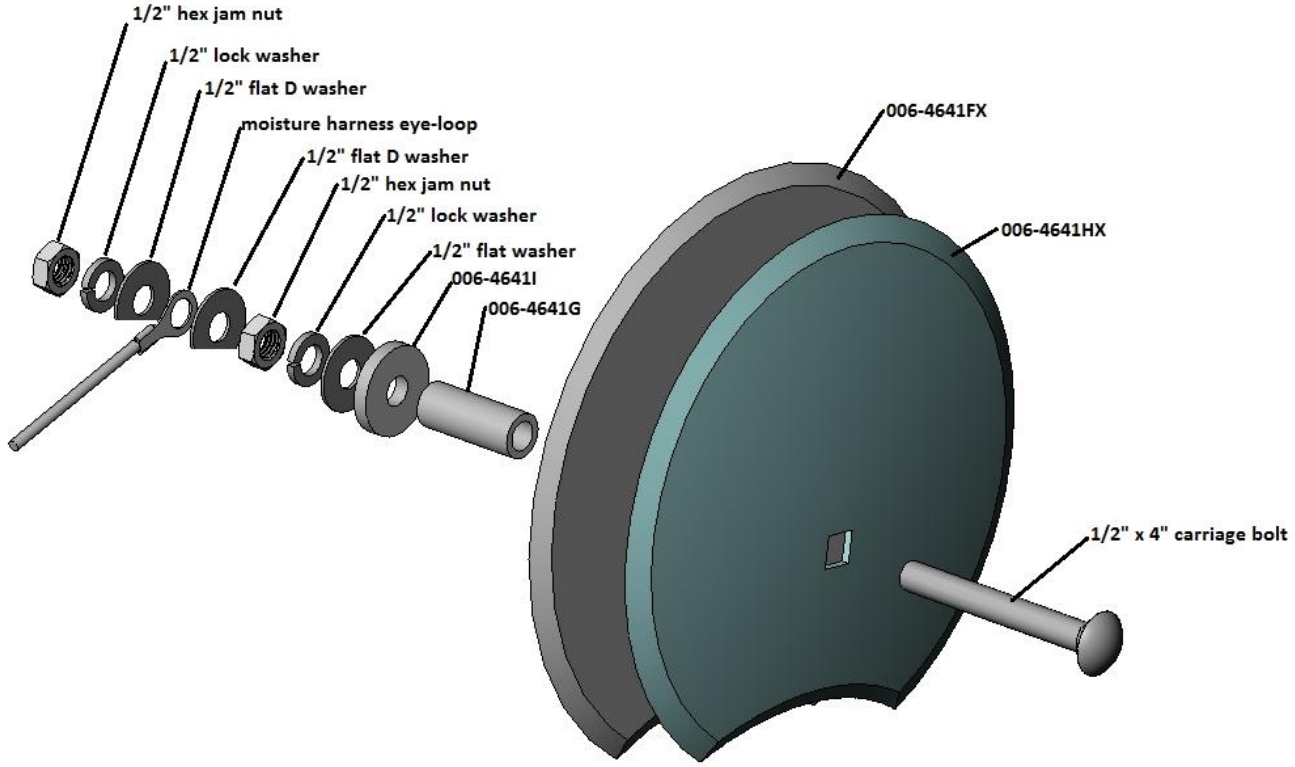

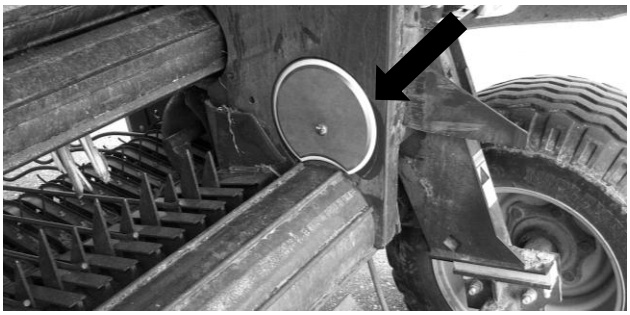

# Option B – Installation
## Moisture Sensor Disc Assembly (030-4643)

**Note for 5' Wide CNH balers:**
Follow the disc placement instructions below, but use the hardware layout as shown in **Option H Installation.**

Balers may come with a factory moisture system installed. The factory moisture discs can be used with the Harvest Tec system as long as they are fully insulated from the bale chamber. Factory moisture system wires must be disconnected from both moisture sensor discs and taped up. The balers factory moisture system wires and the Harvest Tec moisture wires cannot be connected to the moisture discs at the same time. If no factory moisture discs are installed, follow the installation instructions for Harvest Tec Moisture Sensor Discs below

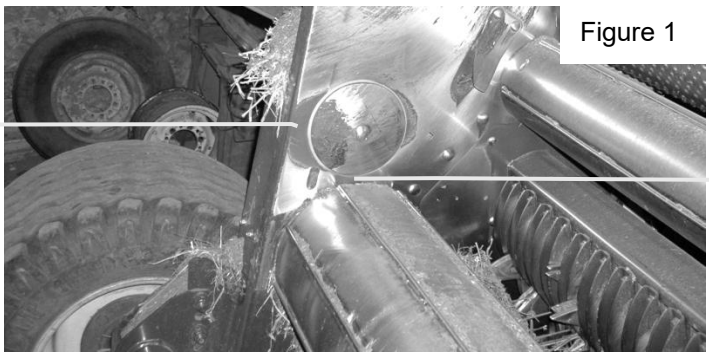

Figure 1

1. If your baler is equipped with bale shaping pads, remove disc and use existing hole (may need to be drilled larger, 3/4" (19mm) to install new moisture sensing discs.
2. If your baler is not equipped with bale shaping pads you will need to drill a hole in the chamber directly behind and above the starting roll (Figure 1).
3. The mounting hole will be 3/4" (19mm) in diameter. Use a plastic pad (006-4641F) and place it into the baler to use as a template. The bottom edge of the pad will be placed 1" (25mm) up from starting roll and 2" (51mm) from the back of the bale chamber (Figure 1).

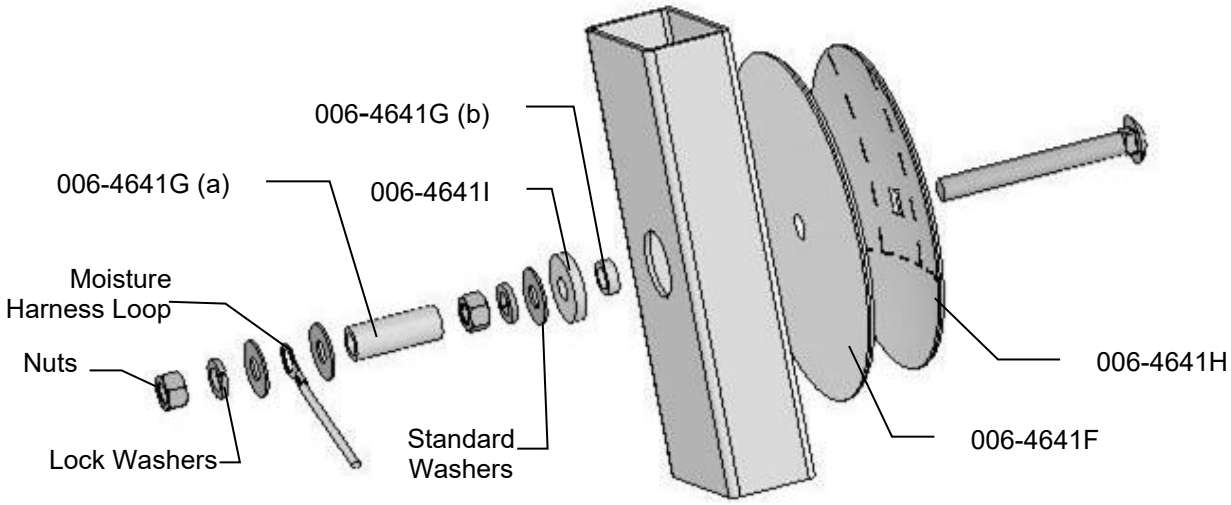


4. Locate the 006-4641G (a) piece, this will need to be cut down to size. Use the already machined line in the bushing to cut off the small piece shown above 006-4641G (b). Part 006-4641I may also need to be trimmed to fit.
5. Depending on the baler the bolt may need to be trimmed for proper fit.
6. Tighten all of the hardware to 50 ft/lbs (68 N/m).
7. Make sure that the plastic pad is protecting all metal surfaces of the disc from touching baler.
8. Run the moisture wire harness from pump plate area to each disc securing with cable ties.
9. Apply silicone over nuts and washers.

# Option C – Installation
## Moisture Sensor Disc Assembly (030-4643)

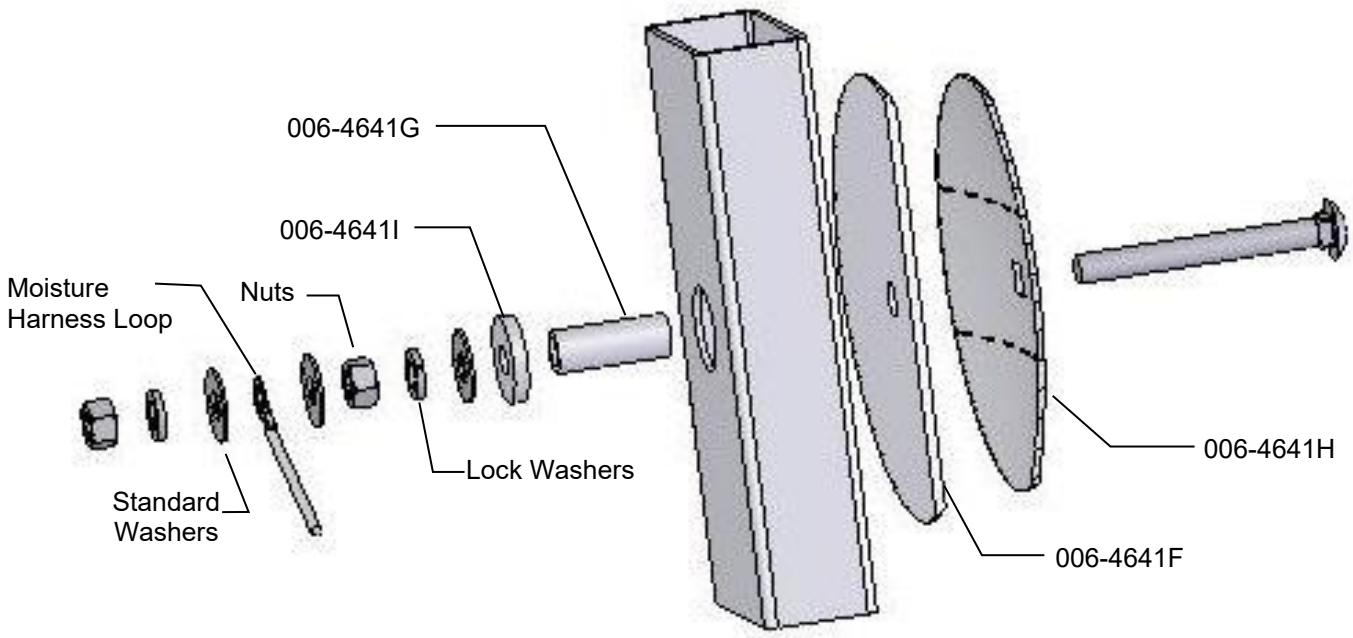


1. Both moisture discs (006-4641H) will need to be cut along the serrated line (A) shown on Figure 1. Only cut on the line shown on Figure 1, do not cut the other lines.
2. The plastic pad (006-4641F) will also need to be cut 1/4" (7mm) longer than the back of the disc.
3. Bevel all sides of the cut discs and pads to allow the smooth travel of crop over them.
4. Using the cut disc as a pattern, mark and drill a 3/4" (19mm) hole in the side of the bale chamber. The disc will need to be placed on the baler 1” (25mm) up from bottom and 1/4" (7mm) in from the back of the chamber (Figure 2).

Figure 1

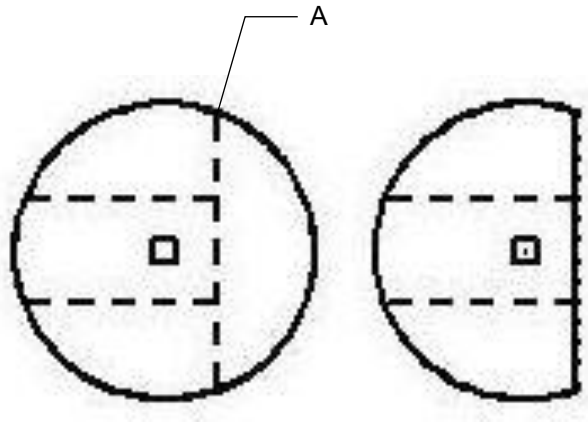


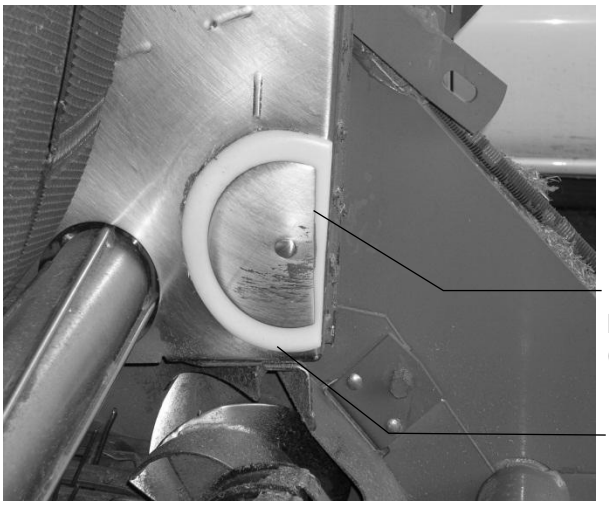


Figure 2

5. Make sure that plastic insulators are protecting all surfaces of the disc and bolt from touching baler metal.
6. Run the moisture wire harness from pump plate area to each disc securing with cable ties.
7. On some balers the bolt may need to be trimmed for proper fit.
8. Tighten all hardware to 50 ft/lbs (68 N/m).
9. Run the moisture wire harness from the processor to each disc, securing with cable ties. Secure harness clear from moving parts, chains and potential pinch points.
10. Apply silicone over nuts and washers to seal moisture and debris away from connections.

# Option D – Installation
## Moisture Sensor Disc Assembly (030-4643)
### for John Deere 582 Balers:

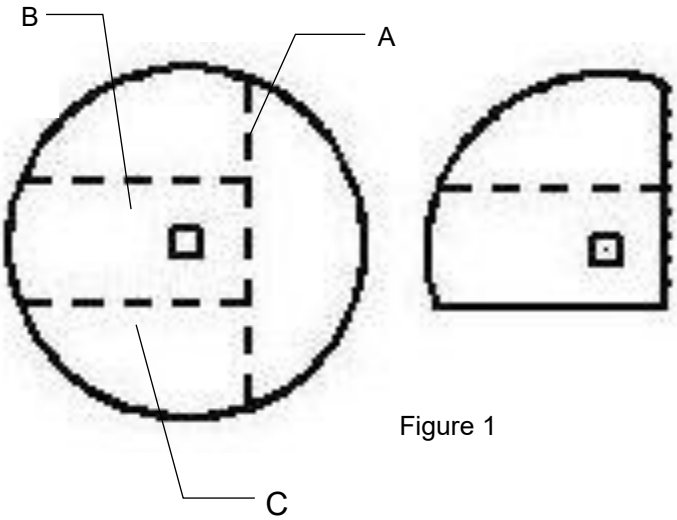


Figure 1

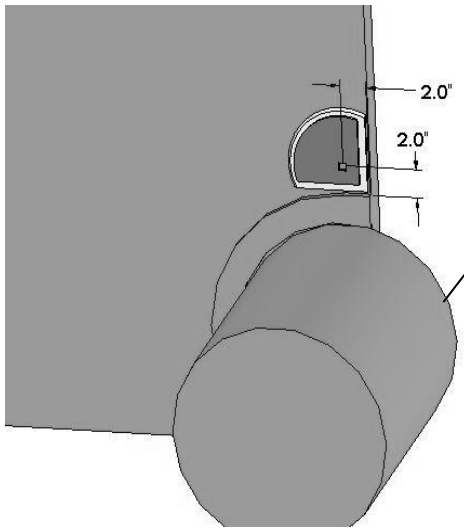


Figure 2

1. The moisture discs (006-4641H) will both need to be cut on line A. (Figure 1) One disc will need to be cut on line B and one disc on line C.
2. The plastic pad (006-4641F) will also need to be cut 1/4" longer than the back of the disc.
3. Bevel all sides of the cut discs to allow the smooth travel of crop over them.
4. The mounting hole will be 3/4" (19mm) in diameter. The disc will need to be placed on the baler lining up the center of the bolt with the location 2” (51mm) up from bottom and 2” in from the back of the chamber. (Figure 2)

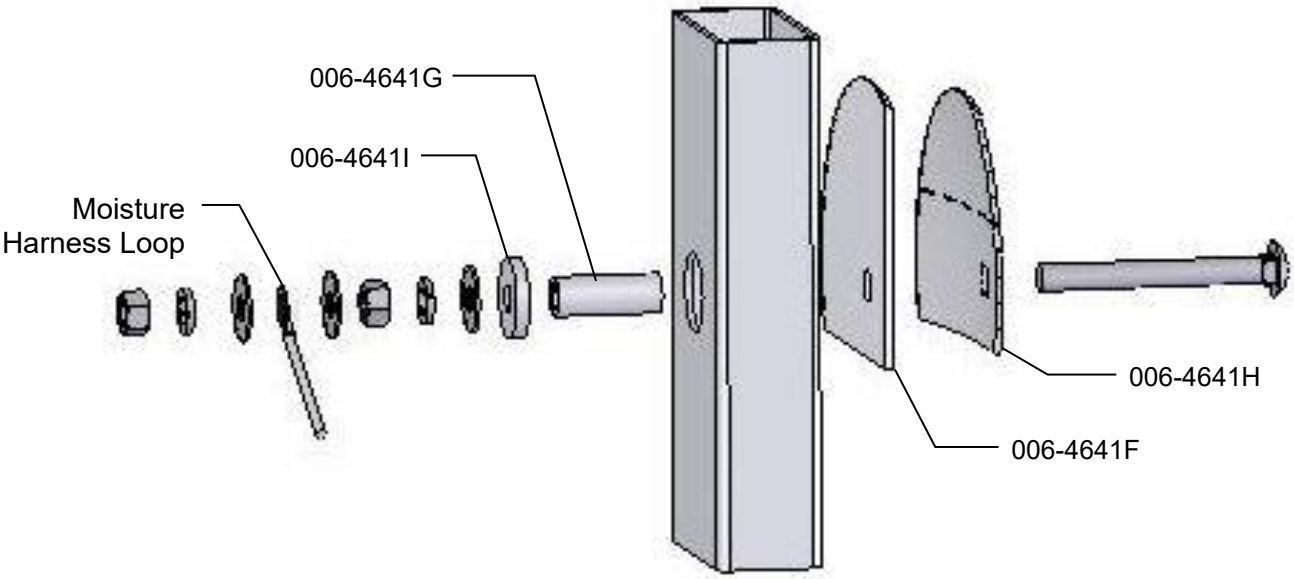


5. Make sure that plastic pad is protecting all metal surfaces of disc from touching baler.
6. Run the moisture wire harness from the pump plate to each disc securing with cable ties.
7. On some balers the bolt may need to be trimmed for proper fit.
8. Tighten all hardware to 50 ft/lbs (68 N/m).
9. Apply silicone over nuts and washers.

# Option D – Installation (continued)
**for John Deere 854 balers:**

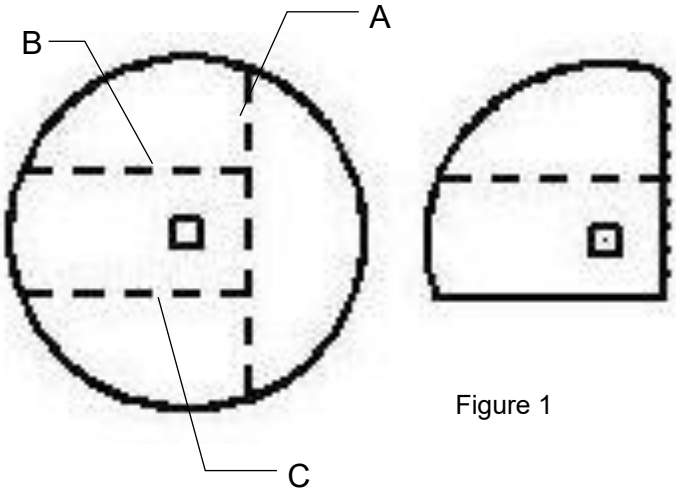


Figure 1

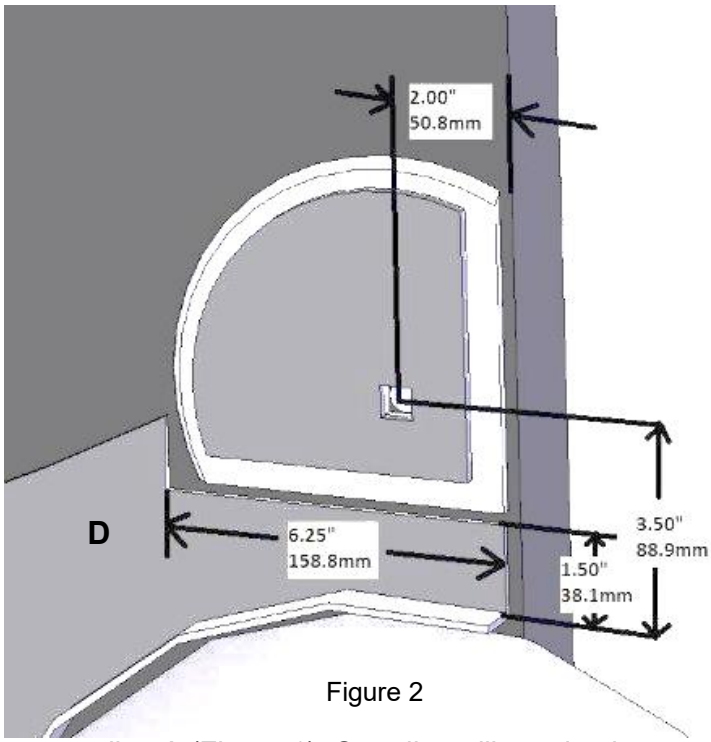


Figure 2

1. The moisture discs (006-4641H) will both need to be cut on line A (Figure 1). One disc will need to be cut on line B and one disc on line C.
2. The plastic pad (006-4641F) will also need to be cut 1/4" (7mm) longer than the back of the disc.
3. Bevel all sides of the cut discs to allow the smooth travel of crop over them.
4. Remove the shield directly above the starter roll shown as figure D on both sides of the baler. Cut the 6 1/4" (16cm) notch out using the supplied measurements. Reinstall both sides.
5. The mounting hole will be 3/4" (19mm) in diameter. The disc will need to be placed on the baler to line up the location of 3 1/2" (89mm) up from bottom and 2" (51mm) from the back of the chamber to the center of the bolt (Figure 2).

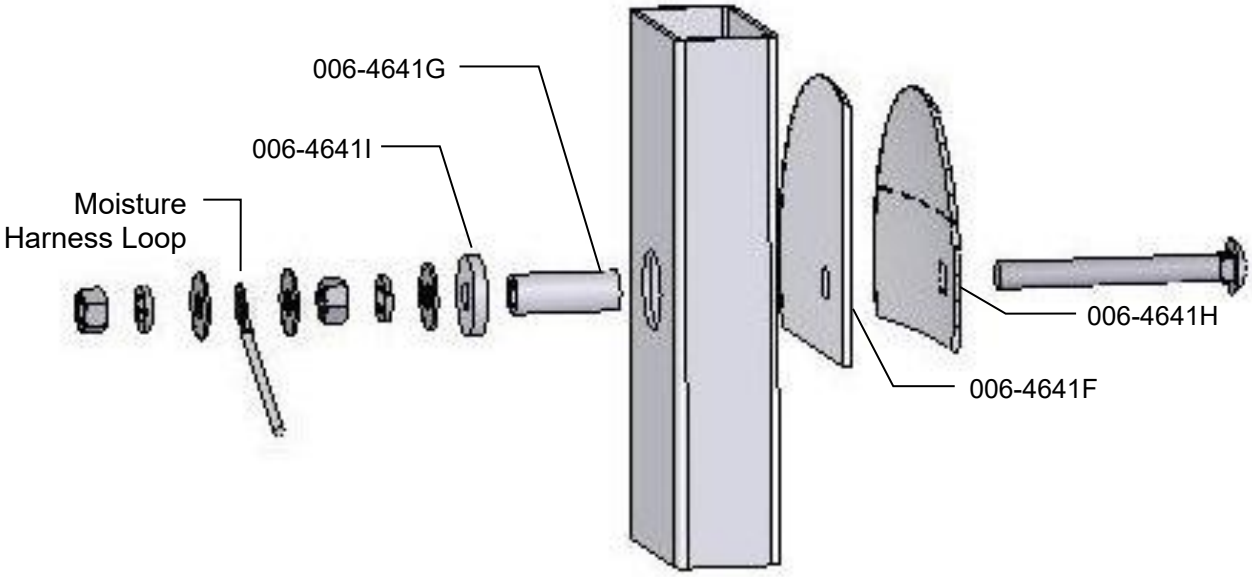


10. Make sure that plastic pad is protecting all metal surfaces of disc from touching baler.
11. Run the moisture wire harness from the pump plate to each disc securing with cable ties.
12. On some balers the bolt may need to be trimmed for proper fit.
13. Tighten all hardware to 50 ft/lbs (68 N/m)
14. Apply silicone over nuts and washers

# Option E – Installation
## Moisture Sensor Disc Assembly (030-4643)

1. If your baler is equipped with bale shaping pads, remove pads and use existing hole (may need to be drilled larger) to install new moisture sensing discs.
2. If your baler is not equipped with bale shaping pads you will need to drill a hole in the chamber directly behind and above the starting roll (Figure 1).
3. You will need to remove the main chain assembly to install the disk on the right side of baler (when facing front of baler) Figure 2.
4. The hole size is 3/4” (19mm) diameter. Before drilling the hole make sure hole is accessible from opposite side of chamber to tighten down mounting hardware and to install moisture harness (Figure 3).

Figure 1

Figure 2

Figure 3

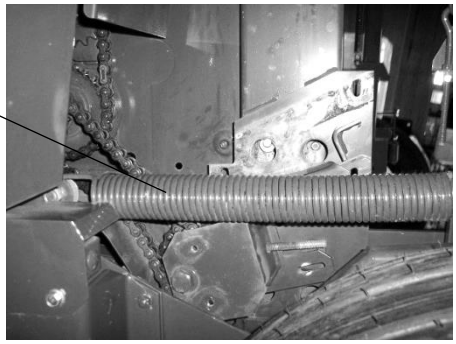

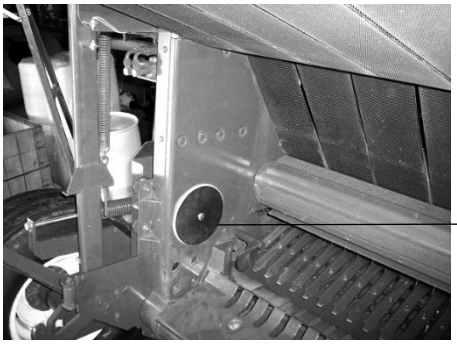

Figure 4

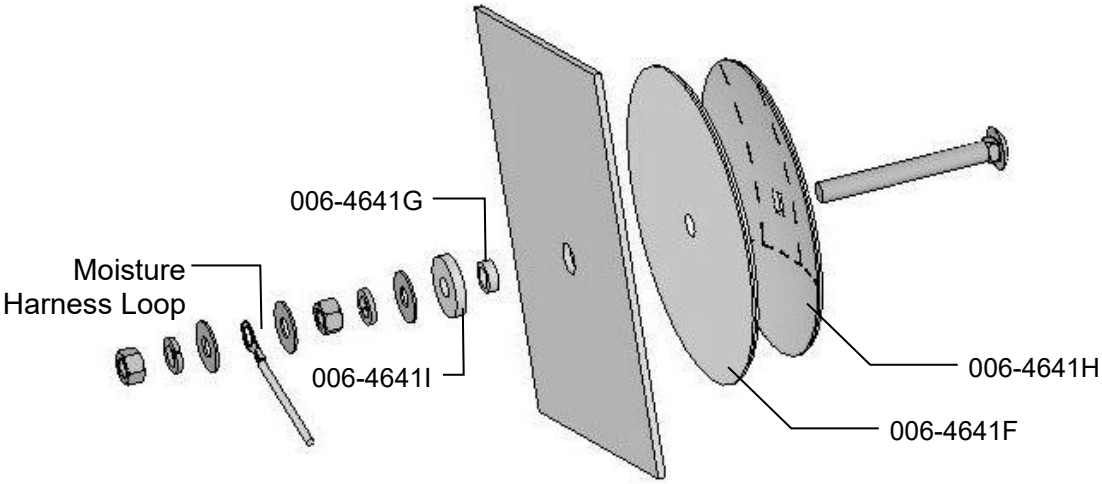


5. Locate the 006-4641G. The piece will need to be cut down to size.
6. Use the already machined line in the bushing to cut off the small piece shown above.
7. Depending on the baler the bolt may need to be trimmed for proper fit.
8. Tighten all of the hardware to 50 ft/lbs (68 N/m).
9. Make sure that the plastic pad is protecting all metal surfaces of the disc from touching baler (Figure 4)
10. Run the moisture wire harness from pump plate area to each disc securing with cable ties.
11. Apply silicone over nuts and washers.

# Option F – Installation
## Moisture Sensor Disc Assembly (030-4643)

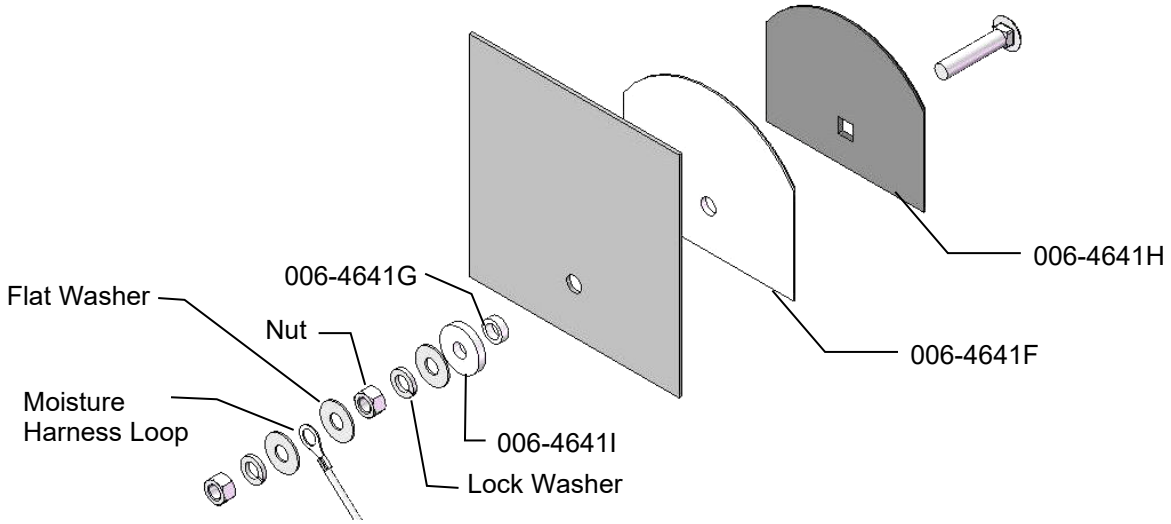


1. Both moisture discs (006-4641H) will need to be cut along the serrated line (A) shown on Figure 1. Measure from the laser etched line (B) 1 3/4" (45mm) on both side. Mark and cut the disc. A completed disc is shown to the right.
2. The plastic pad (006-4641F) will also need to be cut 1/4" (7mm) larger than the steel disc.
3. Bevel all sides of the cut discs and pads to allow the smooth travel of crop over them.

Figure 1

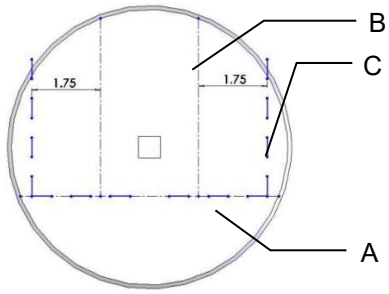


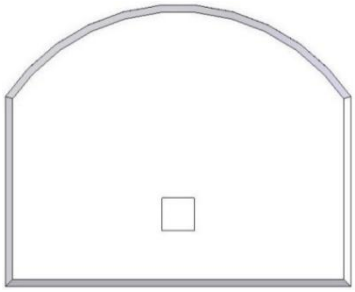

4. Mark a line 1 1/2” (38mm) up and 3 1/2” (89mm) over from point (D) in bale chamber as shown in Figure 2. Drill a 3/4” hole at the point (E). Repeat for the opposite side.
5. Locate the 006-4641G. These pieces will need to be cut down to size. Use the already machined line in the bushings to cut off the small piece shown above to be used.
6. Depending on the baler the bolt may need to be trimmed for proper fit.
7. Tighten all of the hardware to 50 ft/lbs.
8. Make sure that plastic insulators are protecting all surfaces of the disc and bolt from touching baler metal.

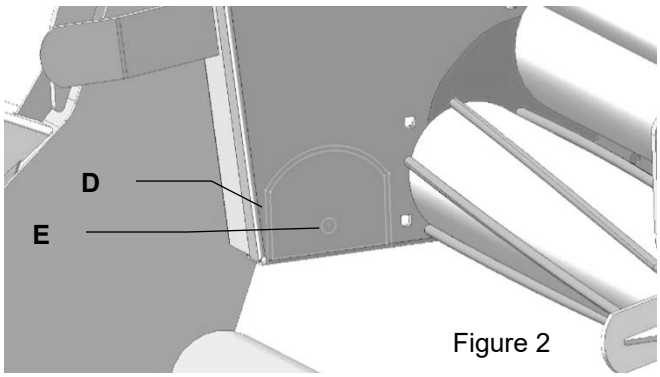


Figure 2

9. Run the moisture wire harness from the processor to each disc, securing with cable ties. Be harness is clear from moving parts, chains and potential pinch points.
10. Apply silicone over nuts and washers to seal moisture and debris away from connections.

# Option G – Installation

## Moisture Sensor Disc Assembly (030-4643)

Figure 1

Figure 2

1. With the baler door open measure 5 1/8" toward top of baler from the point shown in figure 1. Drill a 3/4" (19mm) hole to mount moisture disc as shown in figure 2.
2. Use plastic pad (006-4641F) and place it into the baler to use as a template. The bottom edge of the pad will be placed 2" (51mm) up from bottom of sheet metal on door and starting roll and 1" (25mm) back from sheet metal seam in figure 2.

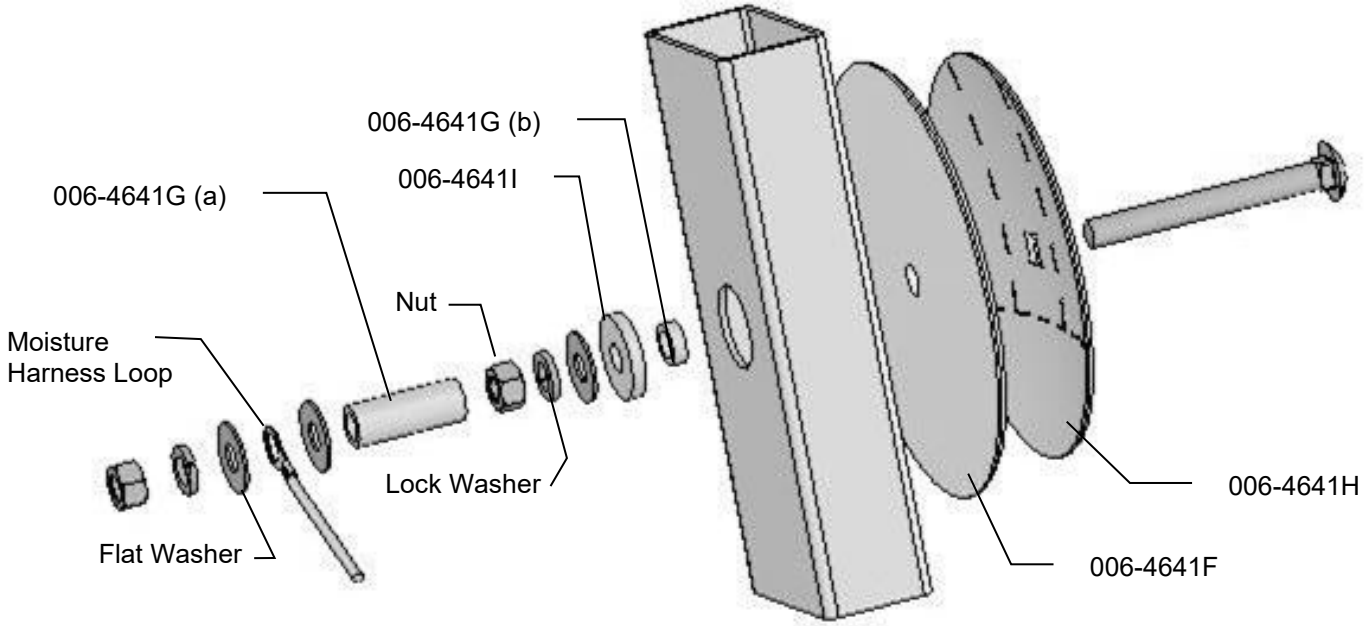


3. Locate the 006-4641G (a) piece, this will need to be cut down to size. Use the already machined line in the bushing to cut off the small piece shown above 006-4641G (b).
4. Depending on the baler the bolt may need to be trimmed for proper fit.
5. Tighten all of the hardware to 50 ft/lbs (68 N/m)
6. Make sure that plastic insulators are protecting all surfaces of the disc and bolt from touching baler metal.
7. Run the moisture wire harness from the processor to each disc, securing with cable ties. Secure harness clear from moving parts, chains and potential pinch points.
8. Apply silicone over nuts and washers to seal moisture and debris away from connections.

# Option H – Installation
## Moisture Sensor Disc Assembly (030-4643)

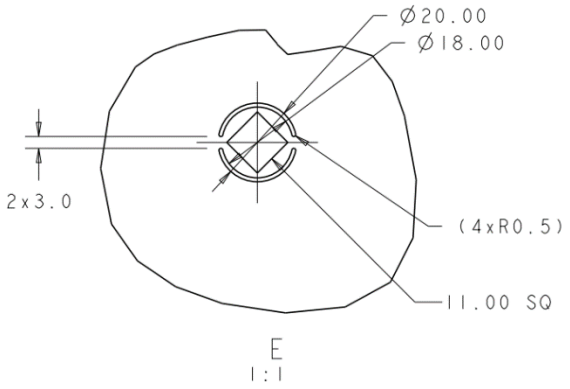


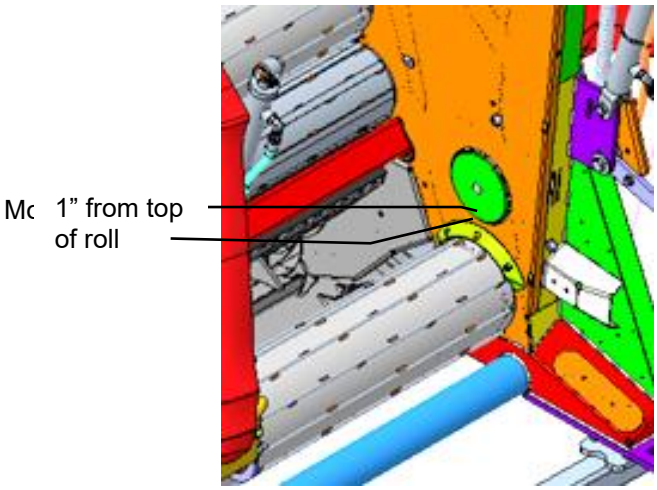


1. Locate marked pry-outs on sides of the bale chamber and remove to change the factory square-hole into a 19mm round hole. Hole may need to be drilled out slightly to accommodate 3/4" wide isolator bushing (006-4641G). (Figure 1)
2. Trim down plastic insulator bushing (006-4641G) using machined mark as an initial guide, and trim down to a finished overall length of 44mm.
3. The mounting hole will be 3/4" (19mm) in diameter. Place plastic pad (006-4641F) behind sensor disk and insert carriage bolt. Place insulated bushing onto carriage bolt and insert through bale chamber wall. Place plastic washer, flat washer, lock washer and nut on bolt and tighten to 50 ft/lbs. Attach Moisture harness loop between additional flat washers and tighten with lock washer and nut.

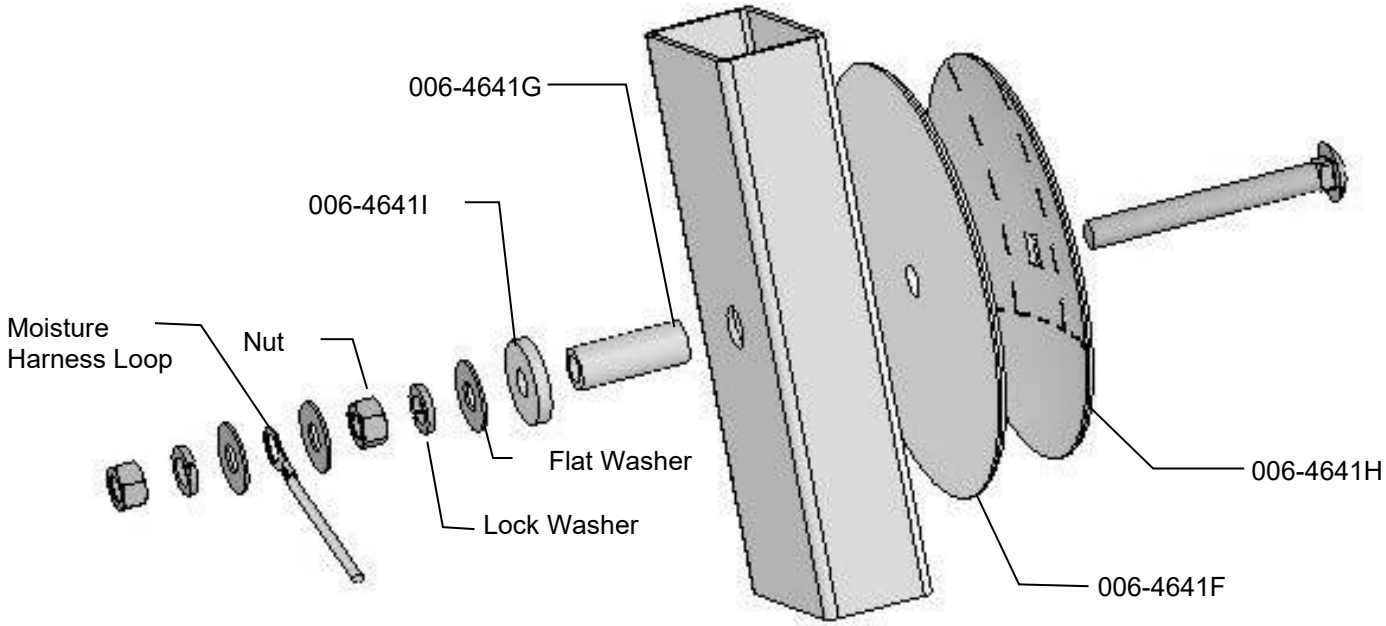


4. Depending on the baler the bolt may need to be trimmed for proper fit.
5. Tighten all of the hardware to 50 ft/lbs (68 N/m).
6. Make sure that the plastic pad is protecting all metal surfaces of the disc from touching baler.
7. Run the moisture wire harness from processor to each disc and securing with cable ties. Be sure harness is clear from moving parts, chains and potential pinch points.
8. Apply silicone over nuts and washers to keep moisture and debris away from connections.

# End of Bale Sensor Kit (EOB-7RB-A)

The bale rate timer sensor is used to determine when the baler door is open. With this information the system is able to change the tons/hour automatically (see Operating Instructions, Automatic Mode).

**Installation -most Round Balers**

Locate proximity sensor (006-7401) and the sensor bracket (001-4648RB). On the right side of the baler locate a suitable location approximately 1”– 6” down from the hinge to mount the bracket. *For CNH Pro Belt balers, see 747P Applicator kit details.* Check for clearance with hydraulic cylinders before mounting the bracket. The bracket should be mounted to the front side of the hinge point, with the sensor aligned over the back door.

Mark and drill two 1/4” (7mm) holes and install the bracket using two 5/16” x1/4” self-tapping bolts. Install proximity sensor into the bracket, leaving 1/4" (7mm) of clearance between the yellow end of the sensor and the door when door is closed.

Route the harness towards the End of Bale (EOB) plug connection on the main baler harness. EOB extension cable 006-7401EXT may be used. Secure with cable ties and take care to avoid pinch points.

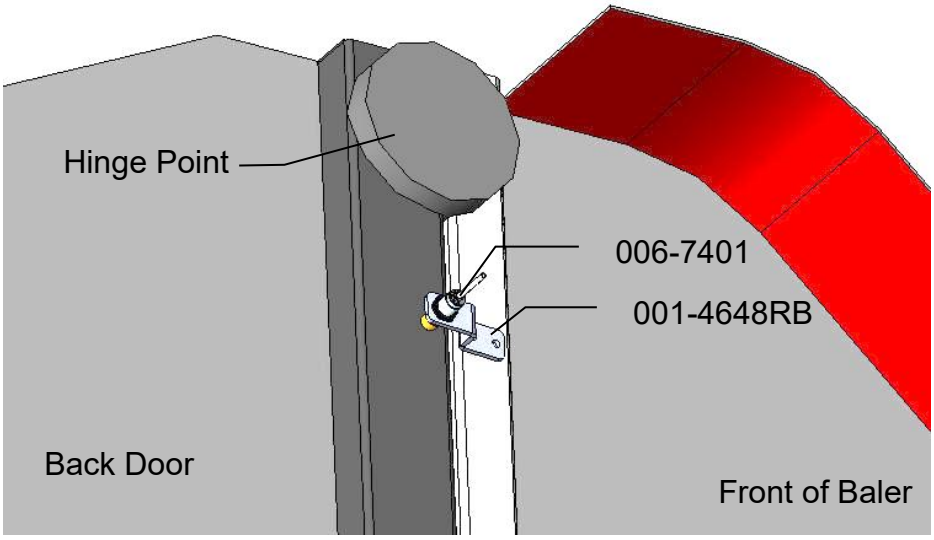


View of the right side of baler

## End of Bale Sensor Kit (EOB-7RB-A)

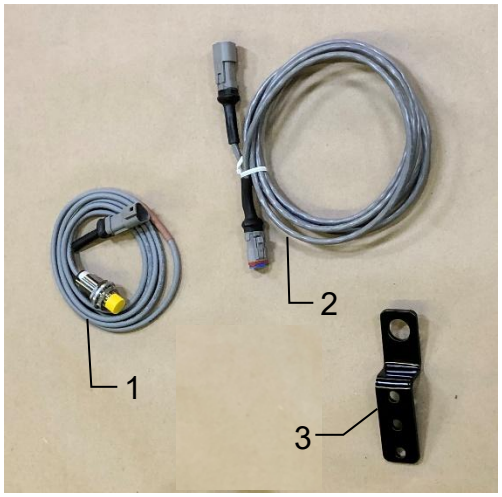


| Ref | Description | Part # | Qty |
|---|---|---|---|
| 1 | End of Bale Sensor | 006-7401 | 1 |
| 2 | EOB Extension | 006-7401EXT | 1 |
| 3 | End of Bale Bracket | 001-4648RB | 1 |

**Complete Assembly** **EOB-7RB-A**

## Main Wire Harness and Connections

Route harness (006-763B) along the draw bar towards the IPM location on the baler. Keep harness away from pinch points, moving parts and hydraulic hoses. Secure with existing cable clamps or use cable ties. Once all sensor connections are made to the harness, connect to the IPM module. Locate suitable locations on the baler to secure any excess harness lengths and sensor wires- shortening or modification is not recommended and will void system warranty.

## Control Box and Wiring Harnesses (030-763CPA)

| Ref | Description | Part# | Qty | Ref | Description | Part# | Qty |
|---|---|---|---|---|---|---|---|
| 1 | Baler Harness - 20’ | 006-763B | 1 | NP | 120 Ohn Resistor | 006-700R* | 1 |
| 2 | Tractor Harness | 006-765IC | 1 | NP | Dust Plug Kit | 006-765DP | 1 |
| 3 | Key Switch Wire | 006-765CPH | 1 | | | | |
| 4 | ISO Pump Module (IPM) | 006-7671RB | 1 | NP | Lightning to USB-A Communication Cable | 006-6672USBC | |
| 5 | ISO Communication Module (ICM) | 006-6673 | 1 | NP | Optional USB-C to USB-A Communication Cable | 006-6672USBX | |

*006-700R installation on 006-762B harness is required at all times when operating the small square 700 series applicator

# Tractor Setup

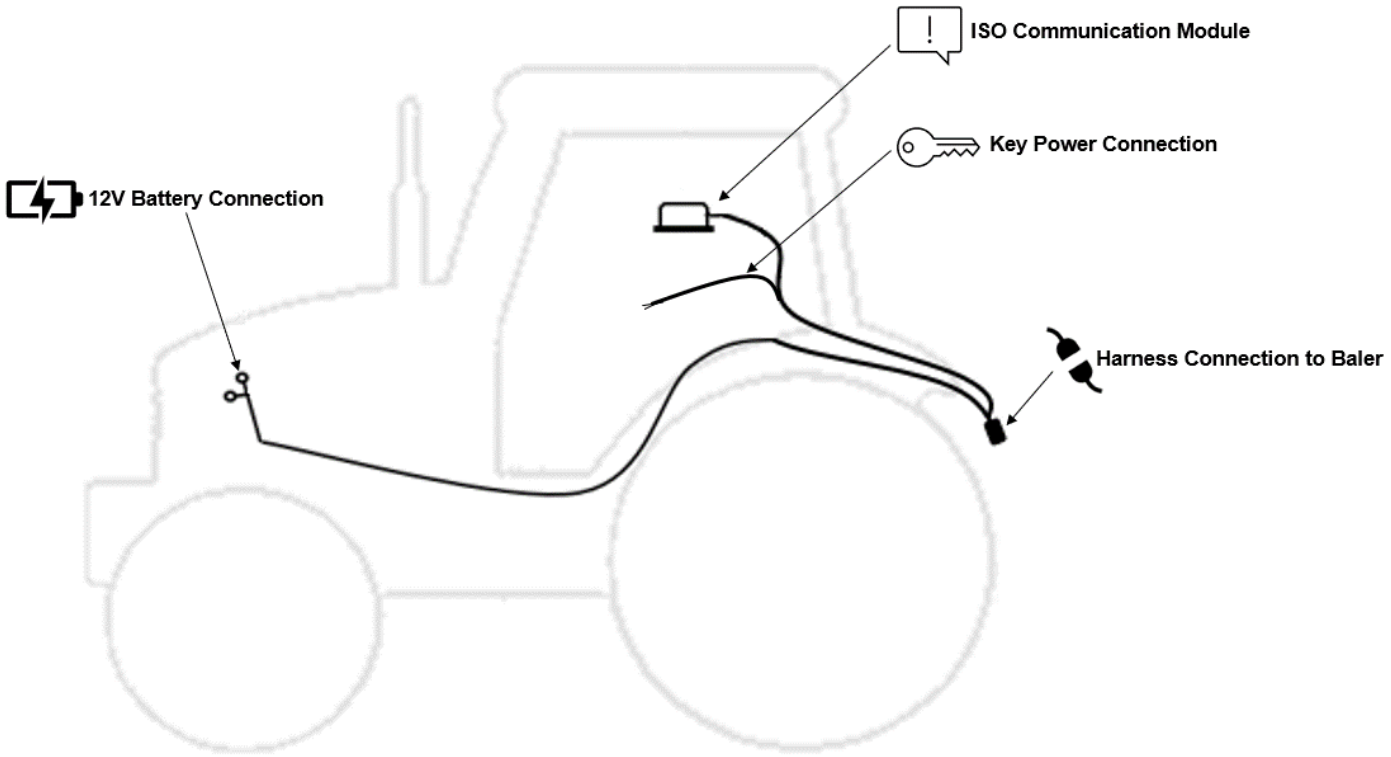


The general tractor setup of the 700 Series applicator can be seen above. The main harness is the tractor power/communication harness (006-765IC). This harness will connect directly to the tractor battery, to the ISO Communication Module (ICM) mounted in the cab, to a keyed power connection point, and connects at the hitch area to the baler power/communication harness of the applicator system.

**12V Battery Connection**

The 12V battery connection must be at the tractor battery. Connection to alternative locations such as an accessory port can cause problems with applicator system. ***MUST BE CONNECTED DIRECTLY TO TRACTOR BATTERY TERMINALS***

**ISO Communication Module**

The ISO communication module is to be mounted inside the cab. Other mounting locations can lead to issues with weathering and operation. Once installed and the system is powered, a green light will turn on with the ICM module.

**Key Power Connection**

Ensure a solid keyed connection is found inside the cab and wired into. Poor keyed power connection can result in applicator system issues.

**Harness Connection to Baler**

The tractor harness connects at the hitch to baler power/communication harness. This will allow the system components to communicate with one another. Ensure connections are debris and corrosion free.

# Display Options

## Optional Harvest Tec Display

The 700 series Harvest Tec Display will allow you to set your real time baling parameters to ensure the most precise application to every bale. This is done by utilizing the improved touch technology to select objects, enter data, and swipe through operational screens.

The Harvest Tec Display offers easy integration by connecting to the additional CAN plug on the 006-765IC harness. Once, connected the Harvest Tec display will power up with applicator system.

**Note: The Harvest Tec Display must be used as a standalone display, the baler cannot run both integrated and on the Harvest Tec Display. Must be one or the other. Removal of the 006-765VA or 006-765VAU (UHD balers) integration harness is required when equipped.**

## Optional Tablet Display

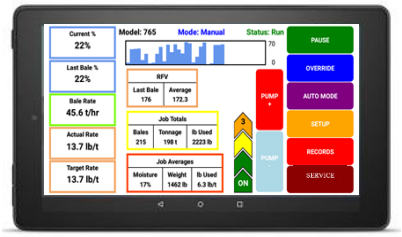


The iOS or Android Tablet displays offer the ability to communicate with the 700 series applicator system via hard-wired connection to the ISO Communication Module (ICM). Through the free Precision Baling App, the operator can set real time baling parameters to ensure the most precise application to every bale. This provides a multi-use option while utilizing the improved app to select objects, enter data, and easily switch through operational screens.

The Tablet Display offers easy integration by connecting a data transfer/charging cable to the USB port on the ICM module (USB port closest to LED light). The Harvest Tec Applicator will display upon opening the app and powering up the applicator system when connected. Tablets can be used in addition to ISO integrated baler VT display.

***Made for iPad® (iOS 15 or higher) or Android Tablet (Does not work with Amazon Fire).**
**Required to be running the most current operating system or one version previous.**
**iPads 10+ years are no longer supported by Apple and are unable to download app.**
*iPad is a trademark of Apple Inc., registered in the U.S. and other countries.

# Optional Harvest Tec Display Kit (030-7670DK)

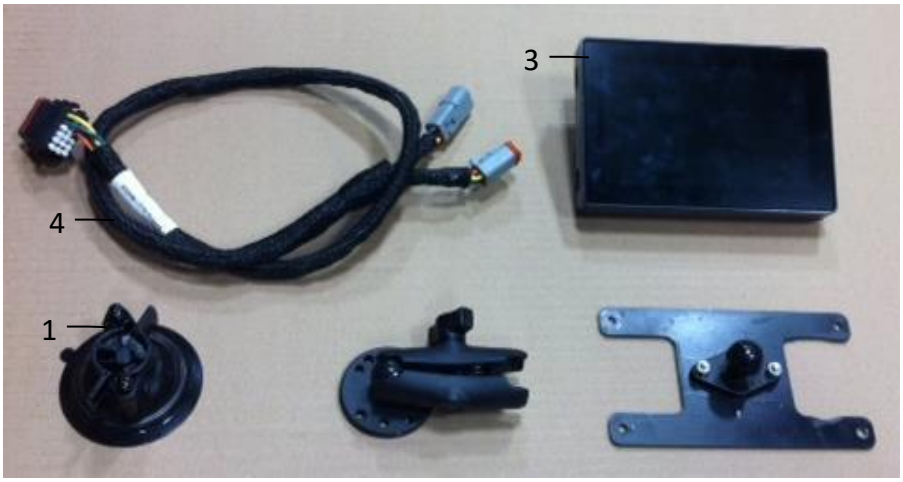

| Ref | Description | Part # | Qty |
|---|---|---|---|
| 1 | Suction Cup Mount | 001-2012SCM | 1 |
| 2 | Ram Mount | 001-2012H | 1 |
| 3 | Harvest Tec Display | 006-765GVT | 1 |
| 4 | Display Harness | 006-765GH | 1 |
| 5 | Mounting Plate | 001-700GH | 1 |
| NP | 700 Series Resistor | 006-700R | 1 |

**Complete HT Display Kit 030-7670DK**

**Installation Instructions**

1. Connect 006-765GH harness connection to 006-765IC tractor harness key power plug.
2. Connect 006-765GH harness to the Harvest Tec VT Display before tightening mount in place.
3. Tighten the mounting and display. Streamline harness as necessary.
4. Once connected, power cycle the system and ensure display is working properly.

NOTE: CANNOT OPERATE APPLICATOR SYSTEM WITH HARVEST TEC DISPLAY AND BALER ISO INTEGRATION or TABLET/ iPad AT THE SAME TIME.

# Optional Android Display Kit (030-1670DK)

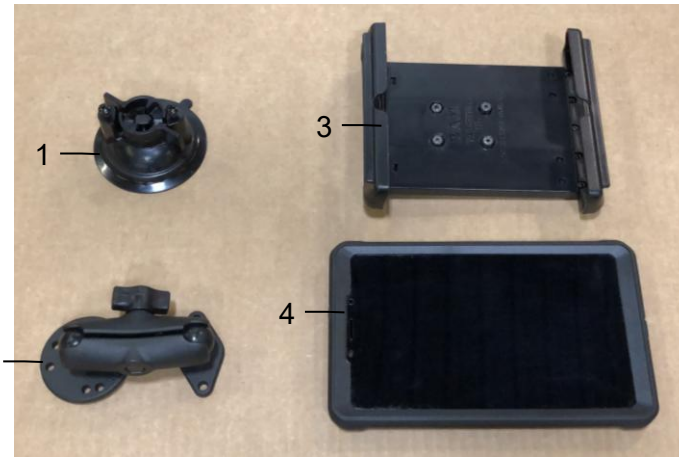


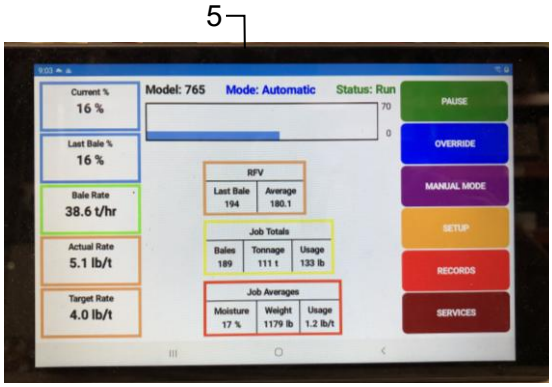


| Ref | Description | Part # | Qty |
|---|---|---|---|
| 1 | Suction Cup Mount | 001-2012SCM | 1 |
| 2 | Ram Mount | 001-2012H | 1 |
| 3 | Spring Load Cradle | 001-2012SLC | 1 |
| 4 | Android Case | 001-2012A1 | 1 |
| 5 | Android Tablet | 006-1670AT | 1 |
| NP | USB-C to USB-A Cable | 006-6672USBX | 1 |

**Complete Android Tablet Display Kit** **030-1670DK**

Note: Use a quality communication cable ending with a USB-A connection to connect tablet to (006-765ICM) control module - plug into the USB port showing a tablet.

# Optional iPad Display Kit (030-6670DK)

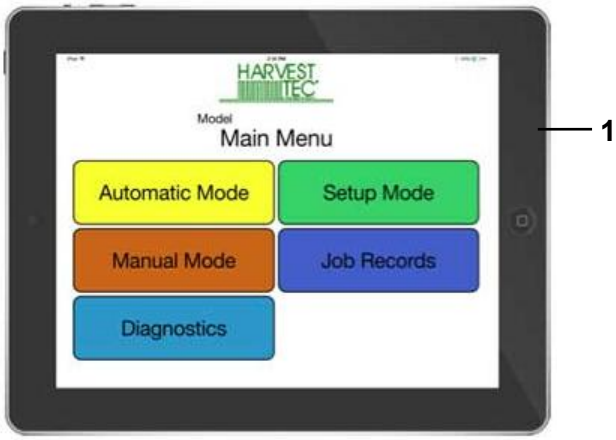


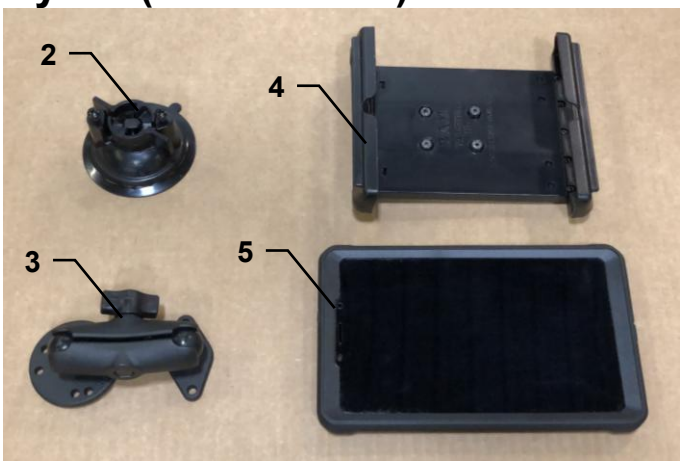


| Ref | Description | Part # | Qty |
|---|---|---|---|
| 1 | iPad Mini 6 | 006-6670IP | 1 |
| 2 | Suction Cup Mount | 001-2012SCM | 1 |
| 3 | Ram Mount | 001-2012H | 1 |
| 4 | Spring Load Cradle | 001-2012SLC | 1 |
| 5 | iPad Mini 6 Case | 001-2012C6 | 1 |
| NP | Power/Comm. Cable | 006-6672USBX | 1 |

**Complete iPad Mini Display Kit** **030-6670DK**

iPad mini is a trademark of Apple Inc., registered in the U.S. and other countries

# Optional ISO Display Adapter Harness (006-7670A or 006-7670F)

***For use with a dedicated ISO display***

The 700 Series Applicator has the option to tie into compatible dedicated ISO monitors by utilizing the diagnostic port. When connected, the Harvest Tec System will populate as its own object pool within the ISO display. When this object pool is selected, the ISO monitor will then function as a dedicated monitor for the Harvest Tec System.

**The Harvest Tec System will function as a stand-alone system when using this adapter.**
**System will not integrate with the baler ISO system software when using this adapter.**

Any tablet connected to the ICM module must be disconnected from the ICM before the Harvest Tec Object Pool screen will activate within the ISO display.
To connect Adapter Harness (006-7670A or 006-7670F), unplug the 4-pin Key Power Plug (006-765CPH) connection from the Tractor Harness (006-765IC) and replace with the plug from the Adapter Harness. Connect the round plug end of the Adapter Harness to the Tractor ISO Display Diagnostic port.

Scan the QR code to view a short video of the
Adapter Harness for ISO Display:

For additional product and service information:
See our YouTube Channel https://www.youtube.com/@harvesttec

## ISO Diagnostic Port Adapter (006-7670A)

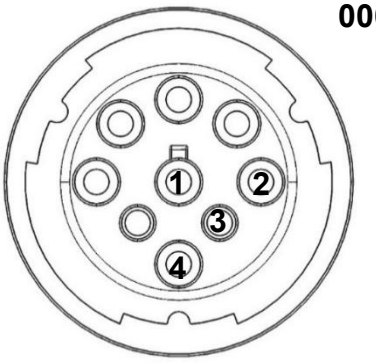


### 006-7670A connecting plug and pin

| | | |
|---|---|---|
| Pin 1 | Black | Ground |
| Pin 2 | Yellow | CAN High |
| Pin 3 | Green | CAN Low |
| Pin 4 | Red | 12V+ Key Power |

## ISO Diagnostic Port Adapter (006-7670F)

***For Newer Fendt and MF Tractors with plug location in the cab ceiling***

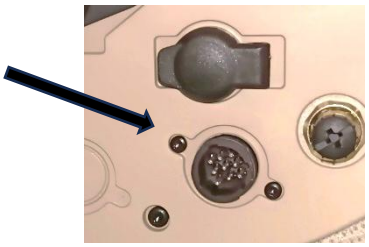

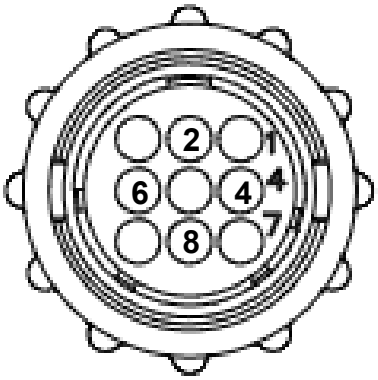


### 006-7670F connecting plug and pin

| | | |
|---|---|---|
| Pin 8 | Black | Ground |
| Pin 4 | Yellow | CAN High |
| Pin 2 | Green | CAN Low |
| Pin 6 | Red | 12V+ Key Power |

# Wiring Diagram – 731, 746, 747, 749 Series

1. Connect the power harness (006-765IC) to the tractor battery (12 volt) using the red wire with fuse to the positive side and the black wire to the negative.
   A. **The power harness must be connected to the battery!**
      **CONTACT HARVEST TEC BEFORE MODIFICATIONS.**
      **The unit will draw more amps than convenience outlets can handle. Any modifications of the power harness will void systems warranty**
   B. **This unit will not function on positive ground tractors.**
   C. **If the unit loses power while operating it will not keep track of accumulated pounds of product used.**
2. The power harness on the tractor (006-765IC) will run from the tractor battery to the hitch. The power harness on the baler (006-763B) will connect to the tractor power harness (006-765IC) at the hitch.
3. Connect the keyed power wire (006-765CPH) to a keyed power source on the tractor.
   **The keyed power wire must connect to a keyed source or the unit will not power up correctly.**
4. Attached the ISO Communication Module (006-6673) to the tractor power harness (006-765IC).
5. Attach the End of Bale (EOB) connection on baler harness (006-765B2) to the EOB Sensor (006-7401).
6. Attach the Solenoids (SOL 1 & 2) connections on the baler harness (006-763B) and to the solenoids (002-2203F).
7. Attach the Flowmeter (006-4724A) to the Pump Module connection on pump plate assembly.
8. Attach the rubber molded connector on pump plate to the Pump (007-4120DE).
9. Attach moisture harness (006-7307RB) to the connection on pump module (IPM).
10. Connect 006-700R terminator must be placed on only one CAN port of (006-763B) harness.

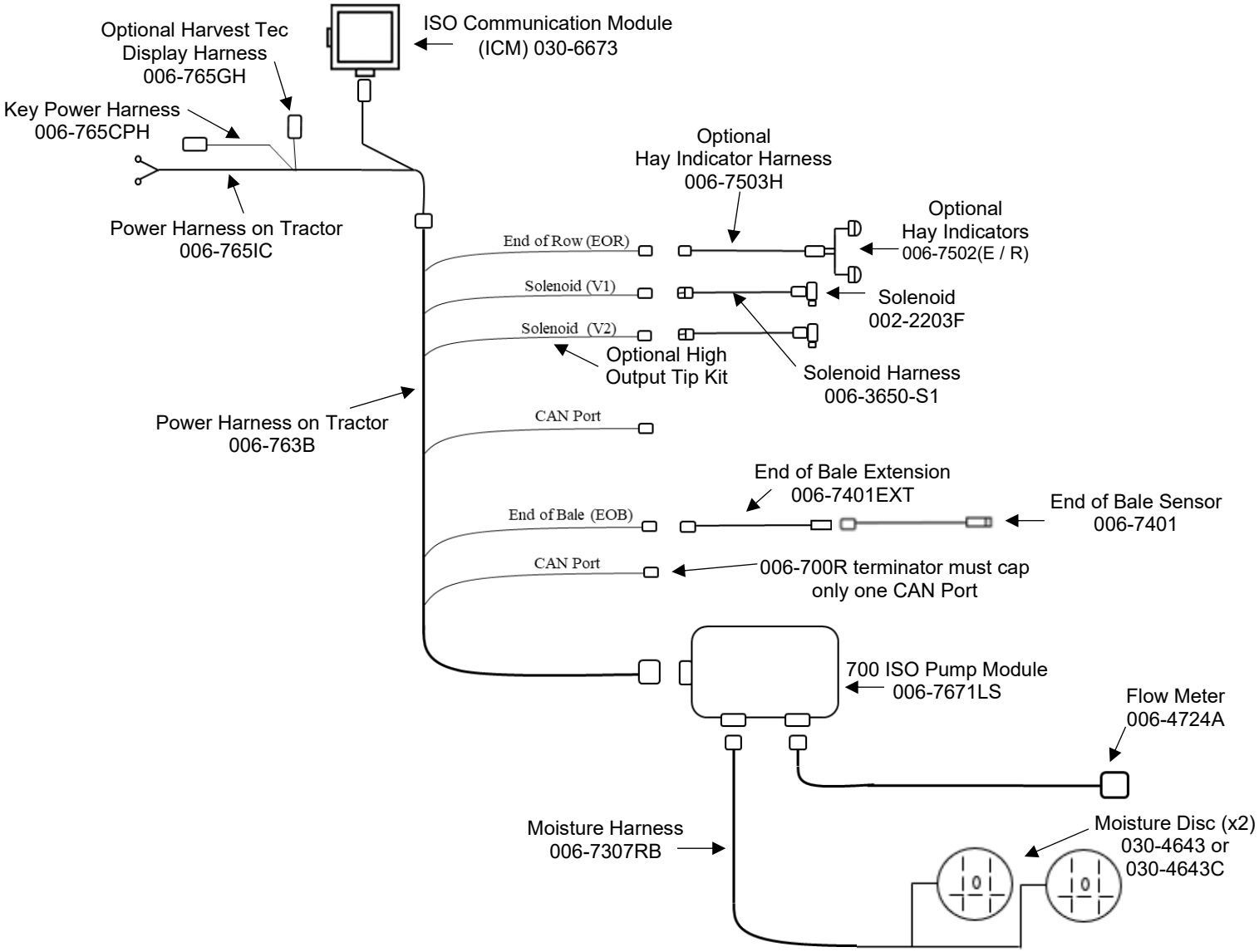

# Pin Outs

## Integrated Control Module (ICM) on Tractor Harness 006-765IC

(Deutsch Plug Number: DTM06-12SA)

| | | |
|---|---|---|
| Pin 1 | Red | +12V from ECU |
| Pin 2 | Purple | Signal Wire |
| Pin 3 | Red/White | +12V CAN X |
| Pin 4 | Black/White | Ground CAN X |
| Pin 5 | Orange | CAN X Hi |
| Pin 6 | Blue | CAN X Lo |
| Pin 7 | Green | ISO CAN Lo |
| Pin 8 | Yellow | ISO CAN Hi |
| Pin 9 | White | GPS Expansion 1 |
| Pin 10 | Gray | GPS Expansion 2 |
| Pin 11 | Brown | GPS Expansion 3 |
| Pin 12 | Black | Ground from ECU |

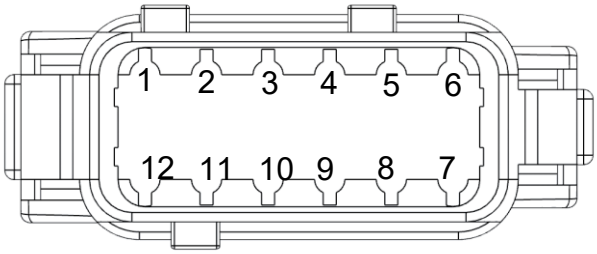


## ISOBUS Plug on Tractor Harness 006-765IC

(Deutsch Plug Number: DT04-4P)

| | | |
|---|---|---|
| Pin 1 | Red | +12V from ECU |
| Pin 2 | Yellow | ISO CAN Hi |
| Pin 3 | Green | ISO CAN Lo |
| Pin 4 | Black | Ground from ECU |

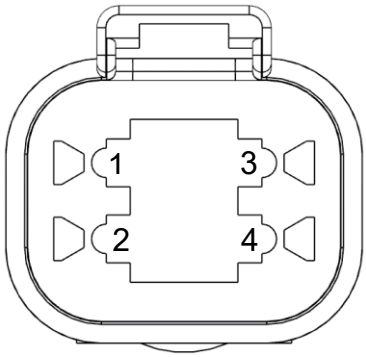


## Power / Communication Tractor Harness 006-765IC at Hitch

(Deutsch Plug Number: HDP24-24-18PN)

| | | |
|---|---|---|
| Pin 1 | Not Used | ---- |
| Pin 2 | Yellow | ISO CAN Hi |
| Pin 3 | Green | ISO CAN Lo |
| Pin 4 | Red | +12V Power to ECU |
| Pin 5 | Black | Ground to ECU |
| Pin 6 | Red | +12V From Battery |
| Pin 7 | Not Used | ---- |
| Pin 8 | Black | Ground From Battery |
| Pin 9 | Not Used | ---- |
| Pin 10 | Purple | Signal Wire |
| Pin 11 | Red/White | +12V CAN X |
| Pin 12 | Black/White | Ground CAN X |
| Pin 13 | Orange | CAN X Hi |
| Pin 14 | Blue | CAN X Lo |
| Pin 15 | White | GPS Expansion 1 |
| Pin 16 | Gray | GPS Expansion 2 |
| Pin 17 | Brown | GPS Expainsion 3 |
| Pin 18 | Not Used | ---- |

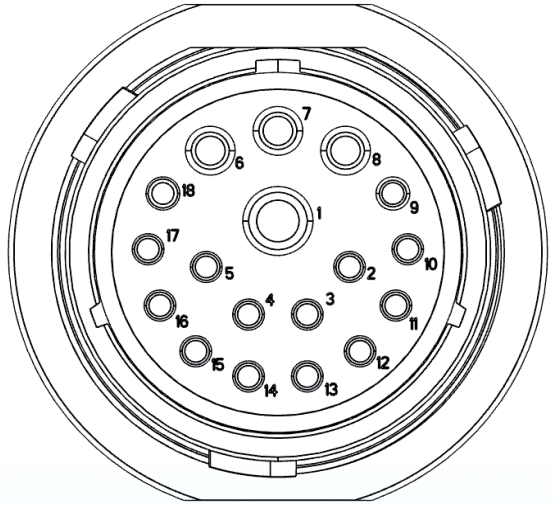

# Pin Outs (continued)

## Power / Communication Baler Harness 006-763B at Hitch

(Deutsch Plug Number: HDP26-24-18SN)

| | | |
|---|---|---|
| Pin 1 | Not Used | ---- |
| Pin 2 | Yellow | ISO CAN Hi |
| Pin 3 | Green | ISO CAN Lo |
| Pin 4 | Red | +12V Power to ECU |
| Pin 5 | Black | Ground to ECU |
| Pin 6 | Red | +12V From Battery |
| Pin 7 | Not Used | ---- |
| Pin 8 | Black | Ground From Battery |
| Pin 9 | Not Used | ---- |
| Pin 10 | Orange/White | +12V Power to EOR |
| Pin 11 | Not Used | ---- |
| Pin 12 | Not Used | ---- |
| Pin 13 | Not Used | ---- |
| Pin 14 | Not Used | ---- |
| Pin 15 | Not Used | ---- |
| Pin 16 | Not Used | ---- |
| Pin 17 | Not Used | ---- |
| Pin 18 | Not Used | ---- |

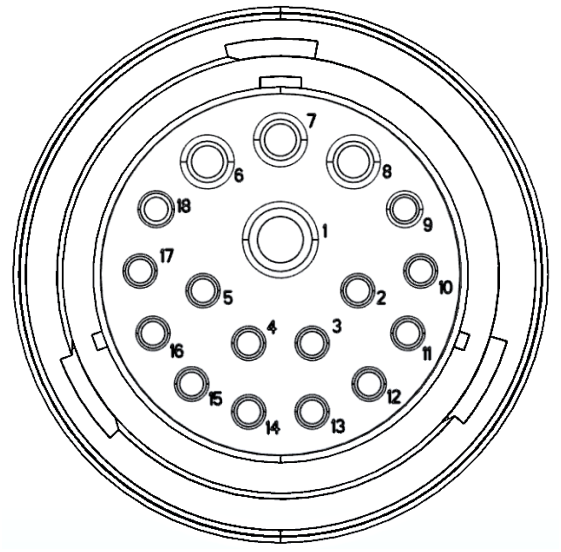


## Power / Communication Baler Harness 006-763B at IPM

(Deutsch Plug Number: HDP24-24-18SN)

| | | |
|---|---|---|
| Pin 1 | Not Used | ---- |
| Pin 2 | Yellow | ISO CAN Hi |
| Pin 3 | Green | ISO CAN Lo |
| Pin 4 | Red | +12V Power to ECU |
| Pin 5 | Black | Ground to ECU |
| Pin 6 | Red | +12V From Battery |
| Pin 7 | Not Used | ---- |
| Pin 8 | Black | Ground From Battery |
| Pin 9 | Not Used | ---- |
| Pin 10 | Orange/White | +12V Power to EOR |
| Pin 11 | Orange/Black | Ground to EOR |
| Pin 12 | Purple/Green | EOR Signal |
| Pin 13 | Blue/White | EOB Signal |
| Pin 14 | Gray/Red | +12V Power to Solenoid 1 |
| Pin 15 | White/Black | Ground to Solenoid 1 |
| Pin 16 | Orange/Red | +12V Power to Solenoid 2 |
| Pin 17 | White/Black | Ground to Solenoid 2 |
| Pin 18 | Not Used | ---- |

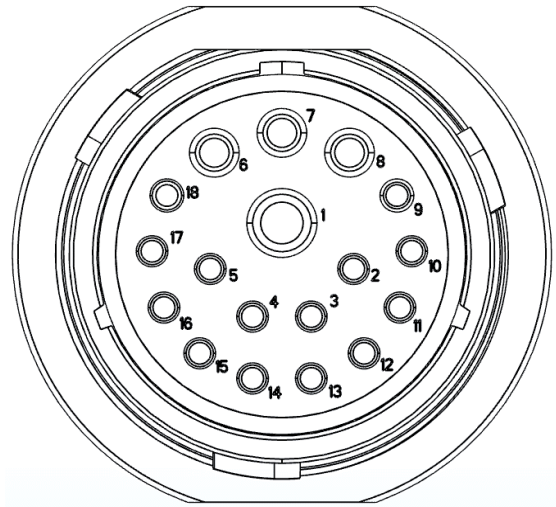


*IPM Module Whip Plug- Pin # 5 Not Used

## Solenoid 1 Plug on Baler Harness 006-763B

(Deutsch Plug Number: APTIV 12052641)

| | | |
|---|---|---|
| Pin B | Gray/Red | +12V to Solenoid 1 |
| Pin A | White/Black | Ground to Solenoid 1 |

## Solenoid 2 Plug on Baler Harness 006-763B

(Deutsch Plug Number: APTIV 12052641)

| | | |
|---|---|---|
| Pin B | Orange/Red | +12V to Solenoid 2 |
| Pin A | White/Black | Ground to Solenoid 2 |

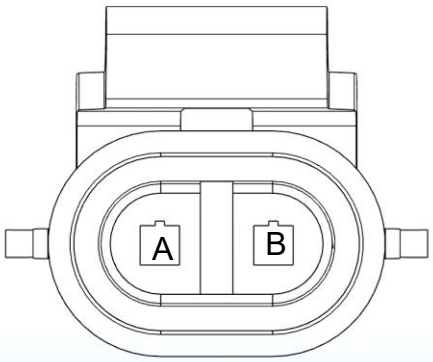

# Pin Outs (continued)

## CAN / IDM on Baler Harness 006-763B

(Deutsch Plug Number: DT06-4S)

| | | |
|---|---|---|
| Pin 1 | Red | +12V to Solenoid 2 |
| Pin 2 | Yellow | ISO CAN Hi |
| Pin 3 | Green | ISO CAN Lo |
| Pin 4 | Black | Ground to Solenoid 2 |

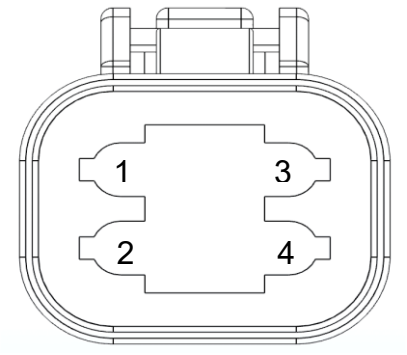


## End of Bale Sensor Plug on Baler Harness 006-763B

(Deutsch Plug Number: DT06-3S)

| | | |
|---|---|---|
| Pin 1 | Orange/White | +12V to End of Bale Sensors |
| Pin 2 | Orange/Black | Ground to End of Bale Sensors |
| Pin 3 | Blue/White | Signal |

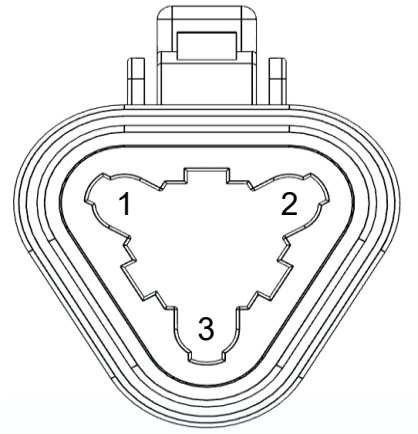


## End of Row Sensors Plug on Baler Harness 006-763B

(Deutsch Plug Number: DT06-3S)

| | | |
|---|---|---|
| Pin 1 | Orange/White | +12V to End of Bale Sensors |
| Pin 2 | Orange/Black | Ground to End of Bale Sensors |
| Pin 3 | Blue/White | Signal |

## Integration Harness Plug on Baler Harness 006-763B

(Plug: APTIV 12052848)

| | | |
|---|---|---|
| Pin A | Not Used | ---- |
| Pin B | Red | +12V Power |
| Pin C | Not Used | ---- |
| Pin D | Gray | Ground |
| Pin E | Orange | CAN Hi |
| Pin F | Blue | CAN Lo |

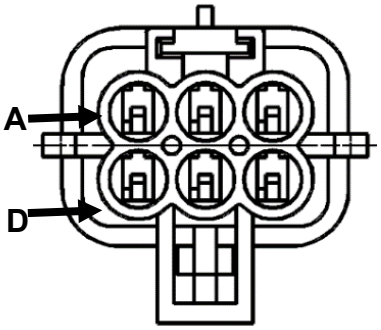


## Pump Connection on 700 Controller Harness

(16 AWG Two-Wire Plug)

| | | |
|---|---|---|
| Pin 1 | Red | Power to Pump |
| Pin 2 | Black | Ground to Pump |

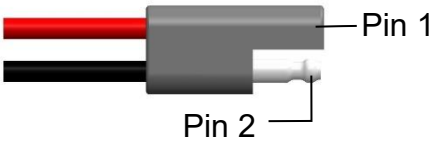

# 74725 and 74755 Install Kit Breakdown

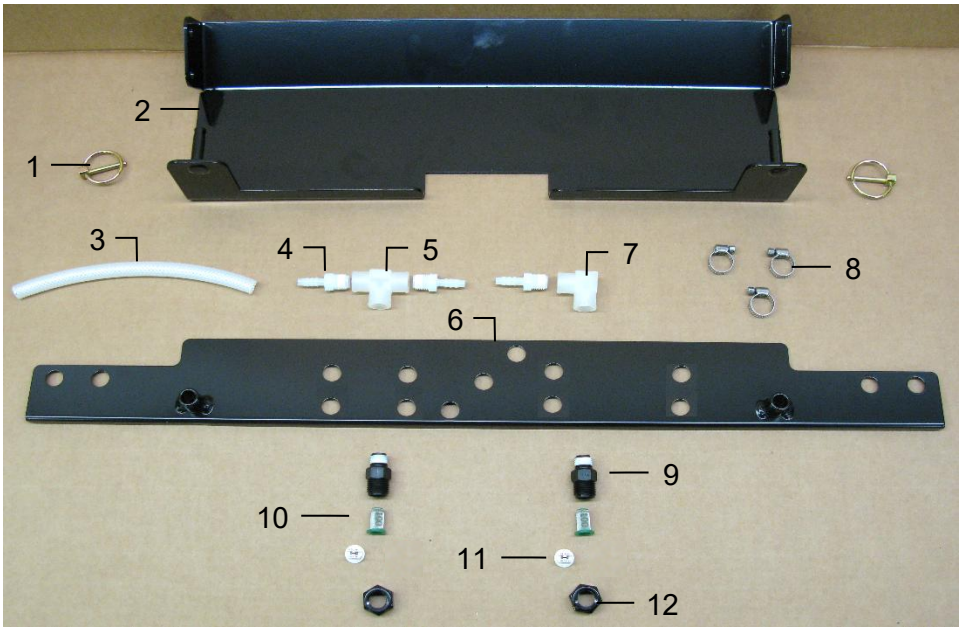


| Ref | Description | Part # | Qty | Ref | Description | Part # | Qty |
|---|---|---|---|---|---|---|---|
| 1 | 3/16” Lynch Pin | 008-4576 | 2 | 8 | Hose Clamp | 003-9002 | 3 |
| 2 | Shield Bracket | 001-4810BRH | 1 | 9 | Nozzle Body | 004-4722 | 2 |
| 3 | Hose | 002-9016 | 2 ft | 10 | Tip Strainer | 001-1203-100 | 2 |
| 4 | Straight Fitting | 003-A1414 | 3 | 11 | Tip* | 004-XR11006VS | 2 |
| 5 | Tee | 003-TT14SQ | 1 | 12 | Nozzle Cap | 004-4723 | 2 |
| 6 | Spray Shield | 001-4810B | 1 | | | | |
| 7 | 1/4” Female Elbow | 003-SE14F | 1 | | | | |

* Tip color subject to change

**Complete Assembly 030-074725-SO**

# 4481X Installation Kit

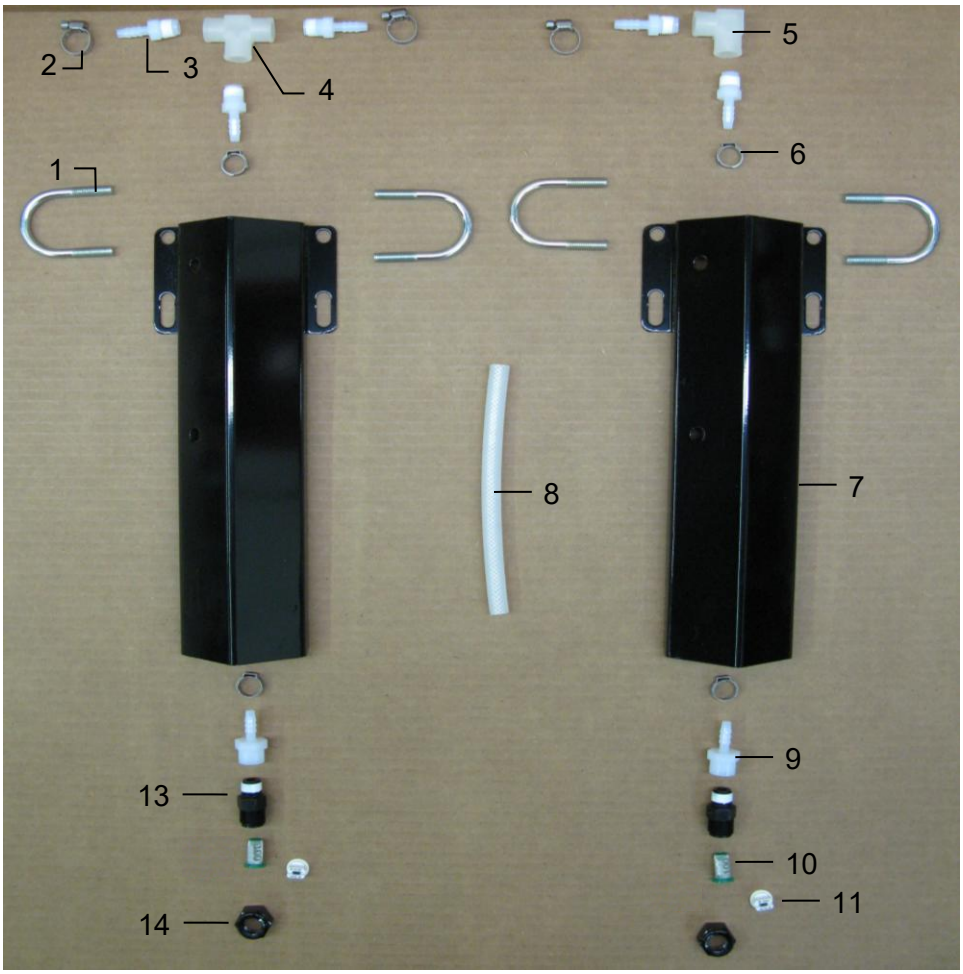


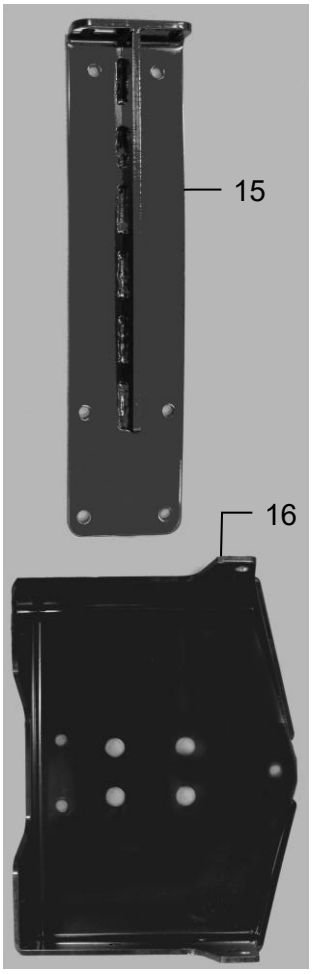


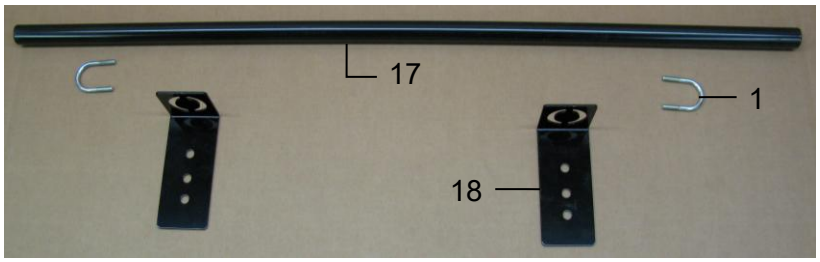


| Ref | Description | Part # | Qty | Ref | Description | Part # | Qty |
|---|---|---|---|---|---|---|---|
| 1 | U bolt | 001-4714UBS | 6 | 11 | Tip* | 004-XR11006VS | 2 |
| 2 | Hose Clamp | 003-9002 | 2 | NP | Jiffy Clip | 008-9014 | 2 |
| 3 | 1/4" x 1/4" Fitting | 003-A1414 | 5 | 13 | Nozzle Body | 004-4722 | 2 |
| 4 | 1/4" Sq Tee | 003-TT14SQ | 1 | 14 | Nozzle Cap | 004-4723 | 2 |
| 5 | 1/4" Female St Elbow | 003-SE14F | 1 | | | | |
| 6 | Oetiker Clamp | 003-9008 | 4 | 15 | Side Tank Support | 001-4704MAK | 2 |
| 7 | Nozzle Holder | 001-4714J | 2 | 16 | Tank Support | 001-4704MK | 1 |
| 8 | Hose | 002-9016 | 3 ft | | | | |
| 9 | 1/4" x 1/4" Fitting | 003-A1414F | 2 | 17 | Pipe Nozzle Mount | 001-4703TP | 1 |
| 10 | Tip Strainer | 004-1203-100 | 2 | 18 | Pipe Holder Brkt. | 001-4703TH | 2 |

* Tip color subject to change

| | |
|---|---|
| Spray Shield Only Kit (Ref 1-14) | 030-7714J-SO |
| Tank Mount (Ref 15-16) | TMK-4481 |
| Univ. Pipe Mtg Kit (Ref 17-18) | SMK-UNIV-PIPE |
| **Complete Assembly** | **030-4481X** |

# 4482X Installation Kit

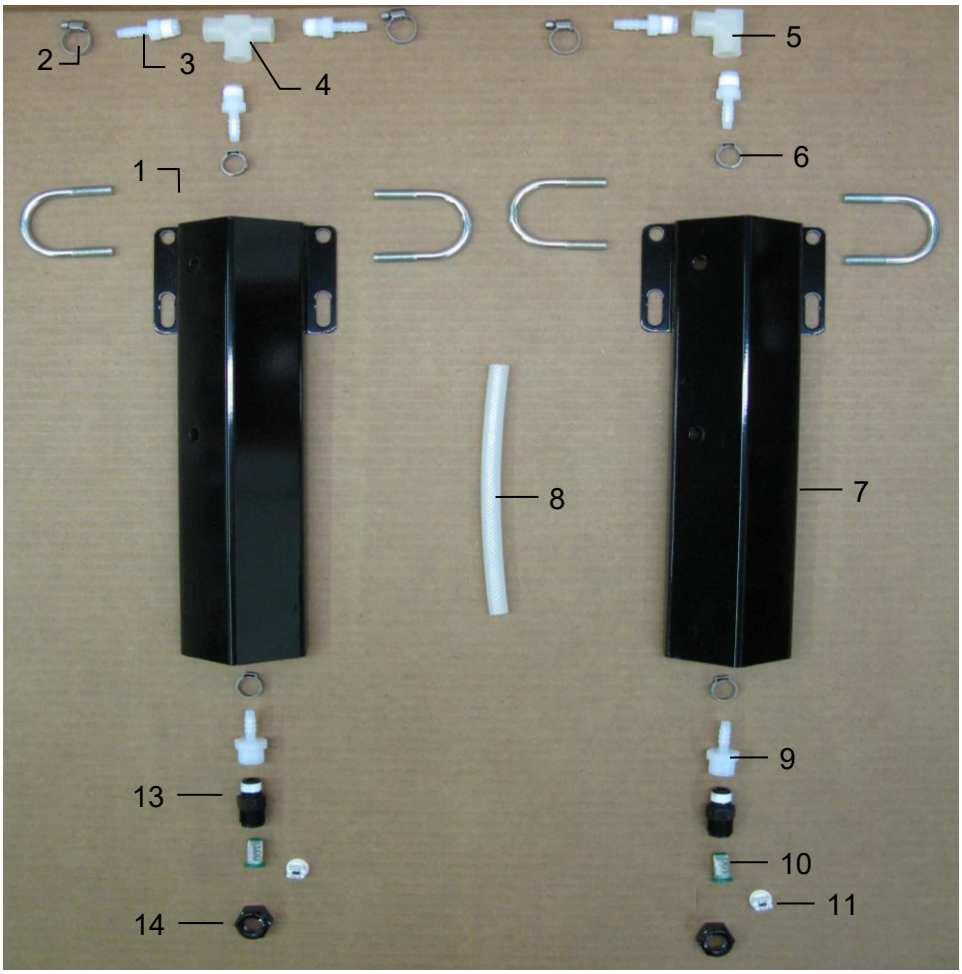


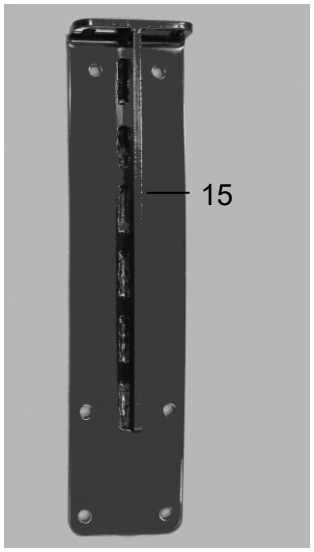


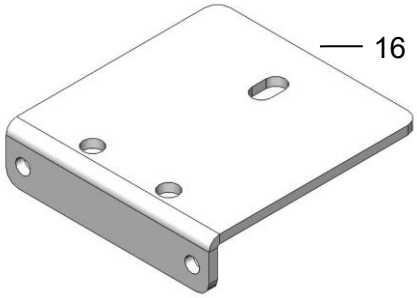


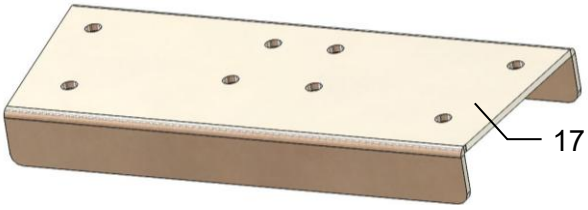


| Ref | Description | Part # | Qty | Ref | Description | Part # | Qty |
|---|---|---|---|---|---|---|---|
| 1 | U bolt | 001-4714UBS | 6 | 10 | Tip Strainer | 004-1203-100 | 2 |
| 2 | Hose clamp | 003-9002 | 2 | 11 | Tip* | 004-XR11006VS | 2 |
| 3 | 1/4" x 1/4" Fitting | 003-A1414 | 5 | NP | Jiffy Clip | 008-9014 | 2 |
| 4 | 1/4" Sq Tee | 003-TT14SQ | 1 | 13 | Nozzle Body | 004-4722 | 2 |
| 5 | 1/4" Female St Elbow | 003-SE14F | 1 | 14 | Nozzle Cap | 004-4723 | 2 |
| 6 | Oetiker Clamp | 003-9008 | 4 | | | | |
| 7 | Nozzle Holder | 001-4714 | 2 | 15 | Mounting Bracket | 001-4704MAK | 2 |
| 8 | Hose | 002-9016 | 3 ft | 16 | Front Mount Plate Pro | 001-4703VZ | 1 |
| 9 | 1/4" x 1/4" Fitting | 003-A1414F | 2 | 17 | Top Support | 001-4704MRF | 1 |

* Tip color subject to change

| | |
|---|---|
| Spray Shield Only (Ref 1-14) | 030-7714J-SO |
| Tank Mount Kit (Ref 15-16) | TMK-4482 |
| **Complete Assembly** | **030-4482X** |

# 4483X Installation Kit

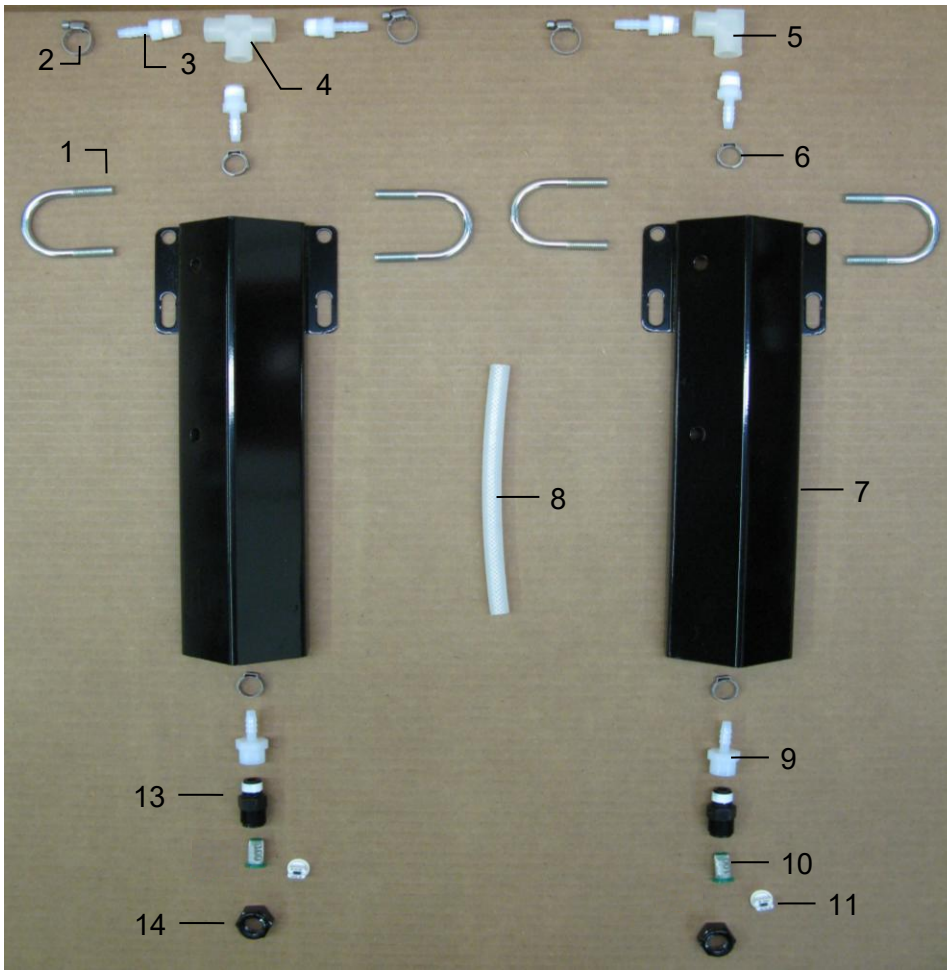


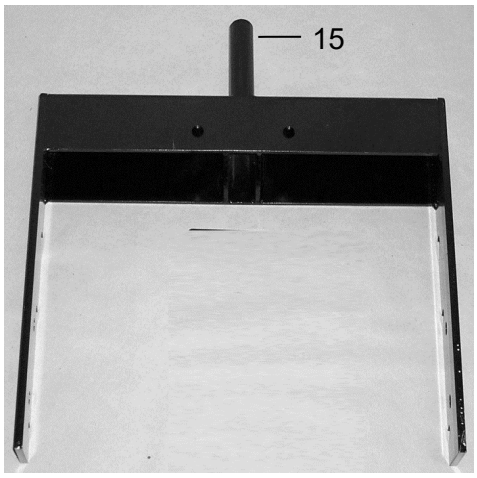


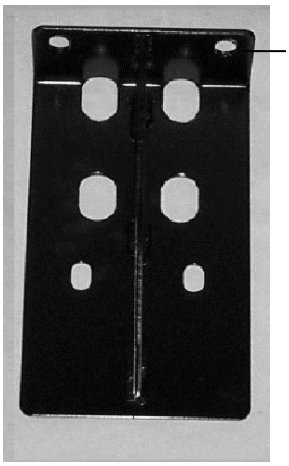


| Ref | Description | Part # | Qty | Ref | Description | Part # | Qty |
|---|---|---|---|---|---|---|---|
| 1 | U bolt | 001-4714UBS | 6 | 10 | Tip Strainer | 004-1203-100 | 2 |
| 2 | Hose clamp | 003-9002 | 2 | 11 | Tip* | 004-XR11006VS | 2 |
| 3 | 1/4" x 1/4" Fitting | 003-A1414 | 5 | NP | Jiffy Clip | 008-9014 | 2 |
| 4 | 1/4" Sq Tee | 003-TT14SQ | 1 | 13 | Nozzle Body | 004-4722 | 2 |
| 5 | 1/4" Female St Elbow | 003-SE14F | 1 | 14 | Nozzle Cap | 004-4723 | 2 |
| 6 | Oetiker Clamp | 003-9008 | 4 | | | | |
| 7 | Nozzle Holder | 001-4714J | 2 | 16 | Mounting Bracket | 001-4411 | 1 |
| 8 | Hose | 002-9016 | 3 ft | 16 | Tank Bracket Brace | 001-4411A | 1 |
| 9 | 1/4" x 1/4" Fitting | 003-A1414F | 2 | | | | |

* Tip color subject to change

| | |
|---|---|
| Spray Shield Only (Ref 1-14) | 030-7714J-SO |
| Tank Mount Kit (Ref 15-16) | TMK-4483 |
| **Complete Assembly** | **030-4483X** |

# 4484X Installation Kit

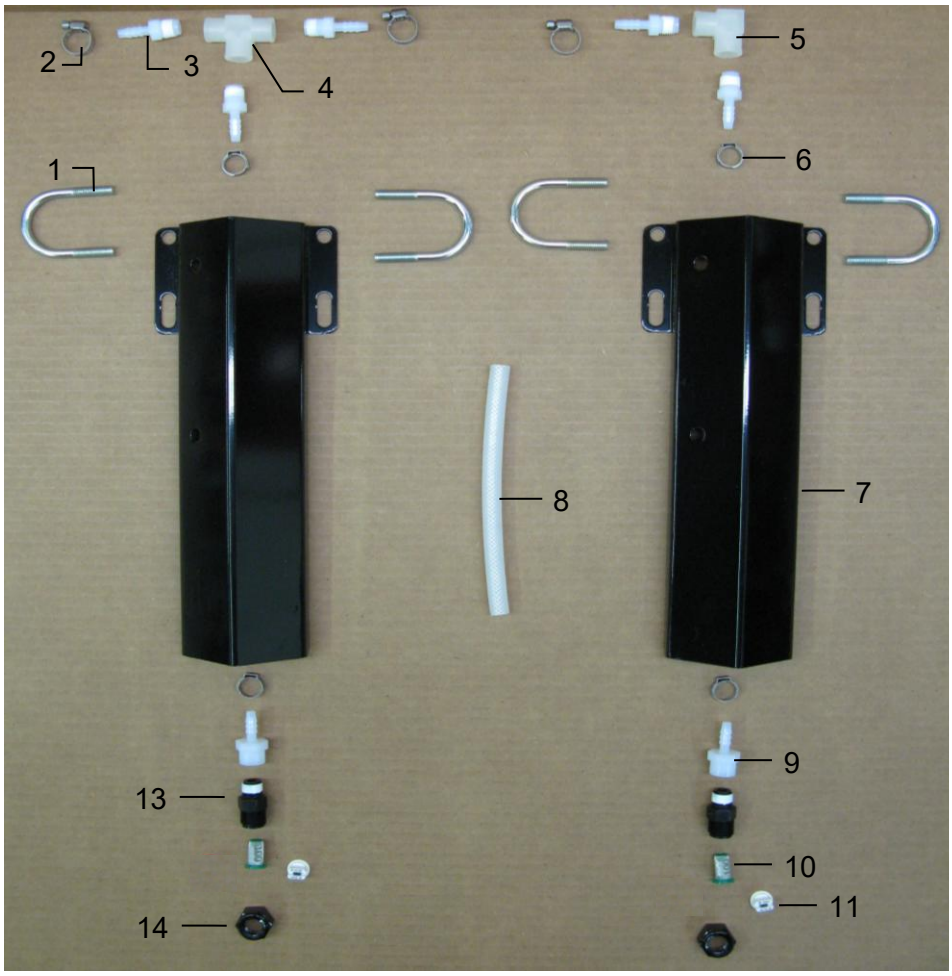


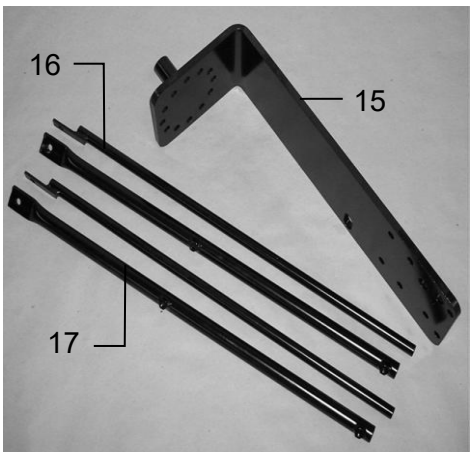


| Ref | Description | Part # | Qty | Ref | Description | Part # | Qty |
|---|---|---|---|---|---|---|---|
| 1 | U bolt | 001-4714UBS | 4 | 10 | Tip Strainer | 004-1203-100 | 2 |
| 2 | Hose clamp | 003-9002 | 2 | 11 | Tip* | 004-XR11006VS | 2 |
| 3 | 1/4" x 1/4" Fitting | 003-A1414 | 5 | NP | Jiffy Clip | 008-9014 | 2 |
| 4 | 1/4" Sq Tee | 003-TT14SQ | 1 | 13 | Nozzle Body | 004-4722 | 2 |
| 5 | 1/4" St Elbow | 003-SE14F | 1 | 14 | Nozzle Cap | 004-4723 | 2 |
| 6 | Oetiker Clamp | 003-9008 | 4 | | | | |
| 7 | Nozzle Holder | 001-4714J | 2 | 15 | Tank Mount Bracket | 001-4418 | 1 |
| 8 | Hose | 002-9016 | 3 ft | 16 | Reach Rod – Outside | 001-4404 | 2 |
| 9 | 1/4" x 1/4" Fitting | 003-A1414F | 2 | 17 | Reach Rod - Inside | 001-4405 | 2 |

* Tip color subject to change

| | |
|---|---|
| Spray Shield Only (Ref 1-14) | 030-7714J-SO |
| Tank Mount Kit (Ref 15-17) | TMK-4484 |
| **Complete Assembly** | **030-4484X** |

# 4486X Installation Kit

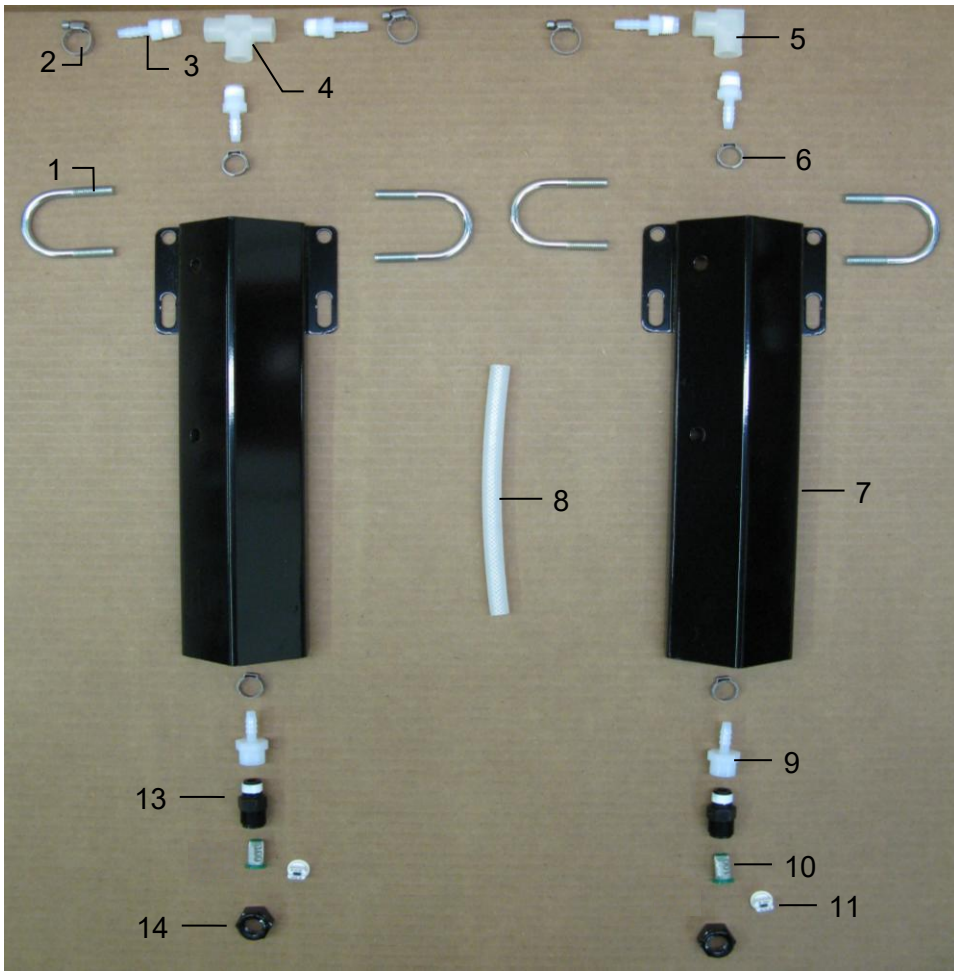


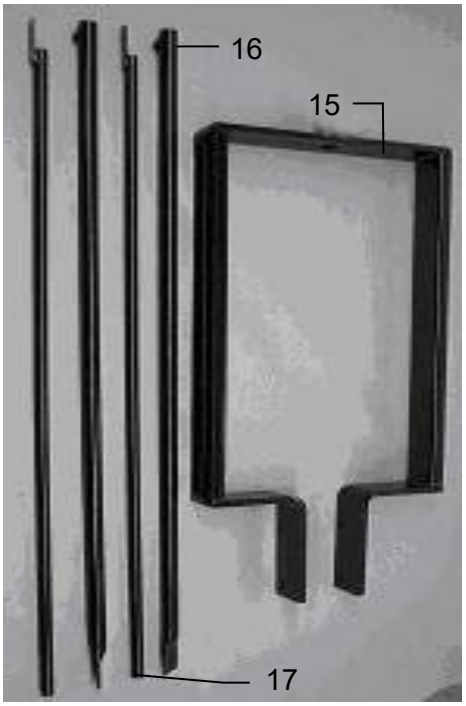


| Ref | Description | Part # | Qty | Ref | Description | Part # | Qty |
|---|---|---|---|---|---|---|---|
| 1 | U bolt | 001-4714UBS | 4 | 10 | Tip Strainer | 004-1203-100 | 2 |
| 2 | Hose clamp | 003-9002 | 2 | 11 | Tip* | 004-XR11006VS | 2 |
| 3 | 1/4" x 1/4" Fitting | 003-A1414 | 5 | NP | Jiffy Clip | 008-9014 | 2 |
| 4 | 1/4" Sq Tee | 003-TT14SQ | 1 | 13 | Nozzle Body | 004-4722 | 2 |
| 5 | 1/4" St Elbow | 003-SE14F | 1 | 14 | Nozzle Cap | 004-4723 | 2 |
| 6 | Oetiker Clamp | 003-9008 | 4 | | | | |
| 7 | Nozzle Holder | 001-4714J | 2 | 16 | Tank Mount Bracket | 001-4420 | 1 |
| 8 | Hose | 002-9016 | 3 ft | 17 | Reach Rod-XL-Out | 001-4404A | 2 |
| 9 | 1/4" x 1/4" Fitting | 003-A1414F | 2 | 17 | Reach Rod-XL-Inner | 001-4405A | 2 |

* Tip color subject to change

| | |
|---|---|
| Shield Only (Ref 1-14) | 030-7714J-SO |
| Tank Kit (Ref 15-17) | TMK-4486 |
| **Complete Assembly** | **030-4486X** |

# 4503X Installation Kit

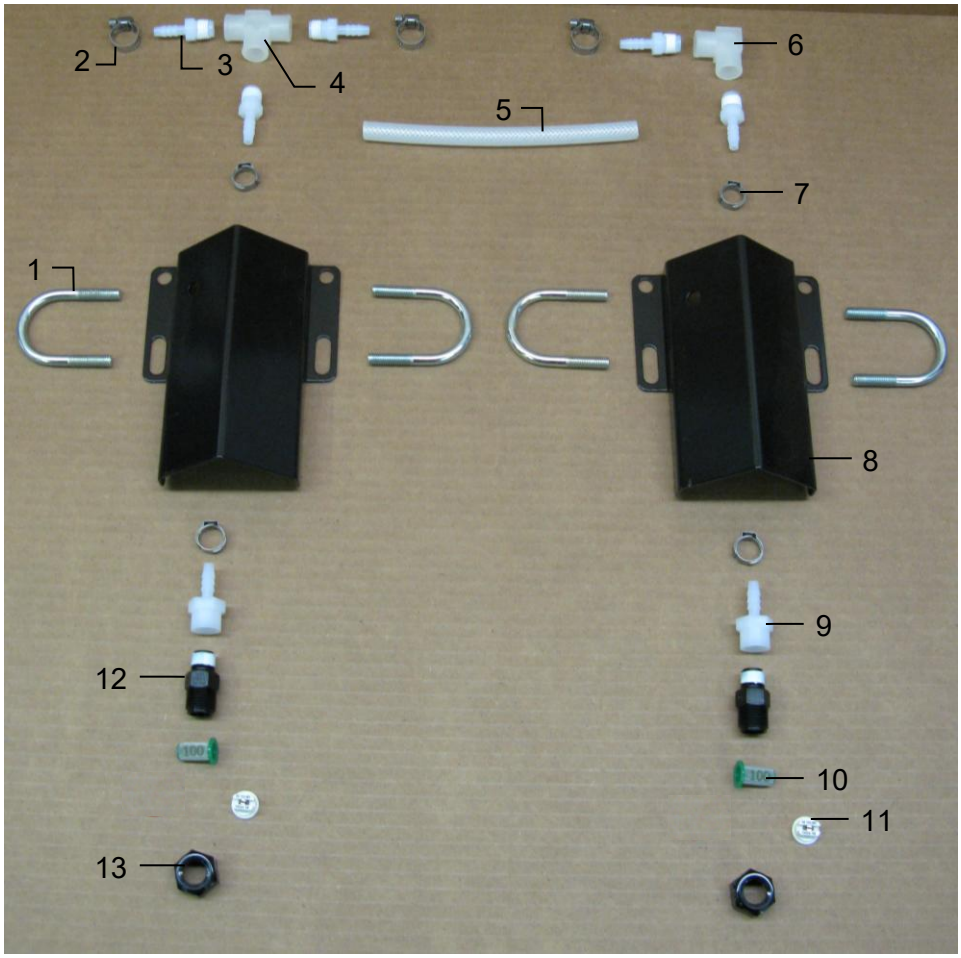


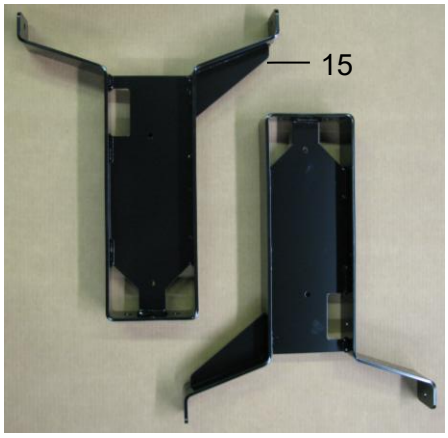


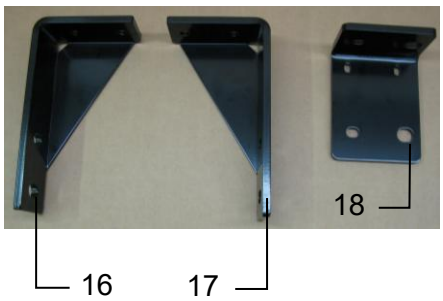


| Ref | Description | Part # | Qty | Ref | Description | Part # | Qty |
|---|---|---|---|---|---|---|---|
| 1 | U bolt | 001-4714UBS | 4 | 10 | Tip Strainer | 004-1203-100 | 2 |
| 2 | Hose Clamp | 003-9002 | 3 | 11 | Tip* | 004-XR11006VS | 2 |
| 3 | 1/4" x 1/4" Fitting | 003-A1414 | 5 | 12 | Nozzle Body | 004-4722 | 2 |
| 4 | 1/4" Sq Tee | 003-TT14SQ | 1 | 13 | Nozzle Cap | 004-4723 | 2 |
| 5 | Hose | 002-9016 | 4ft | | | | |
| 6 | 1/4" St Elbow | 003-SE14F | 1 | 15 | Tank Leg – Long | 001-4703B | 2 |
| 7 | Oetiker Clamp | 003-9008 | 4 | 16 | Left Mounting Bracket | 001-4703EL | 1 |
| 8 | Nozzle Holder | 001-4714JS | 2 | 17 | Right Mounting Bracket | 001-4420 | 1 |
| 9 | 1/4" x 1/4" Fitting | 003-A1414F | 2 | 18 | Mount Extension | 001-4703EXT | 1 |

* Tip color subject to change

| | |
|---|---|
| Spray Shield Only (Ref 1-13) | 030-7714JS-SO |
| Tank Mount Kit (Ref 15-18) | TMK-4503 |
| **Complete Assembly** | **030-4503X** |

# 4504X Installation Kit

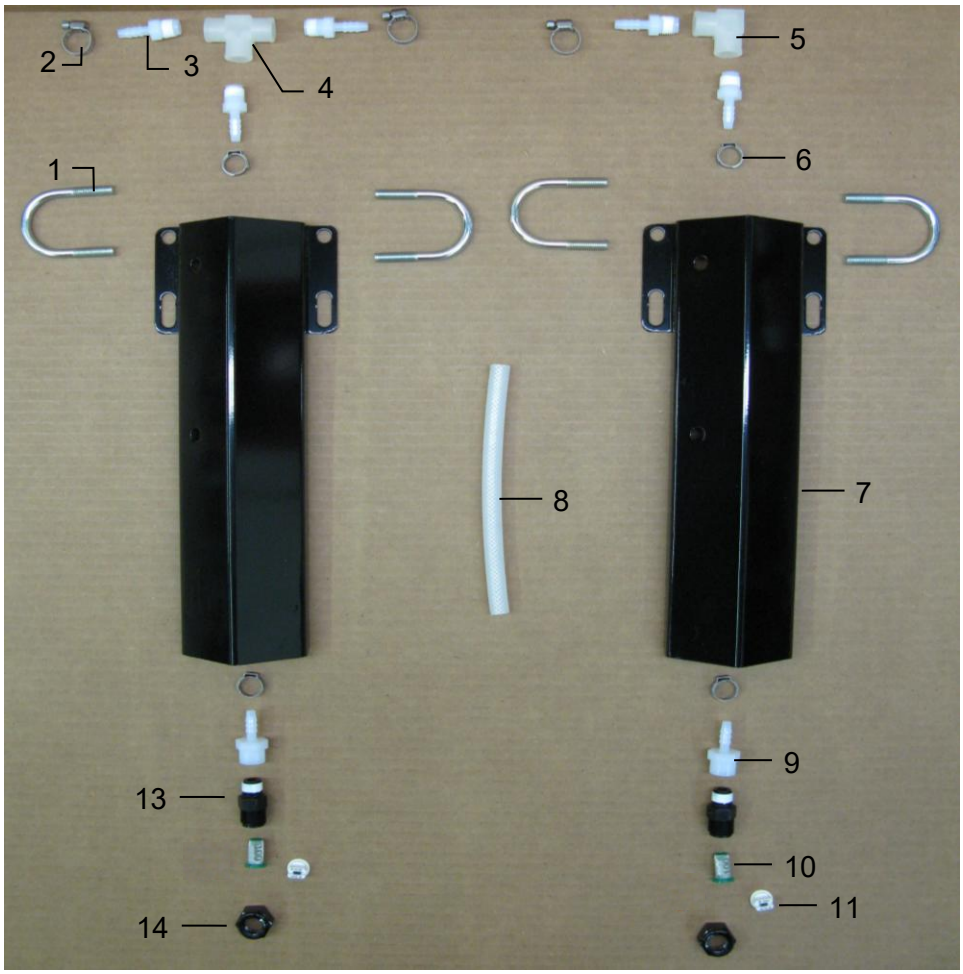


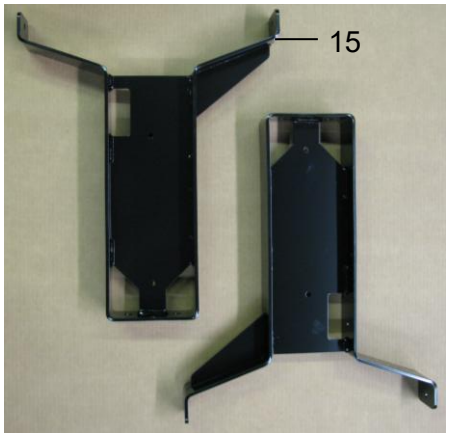


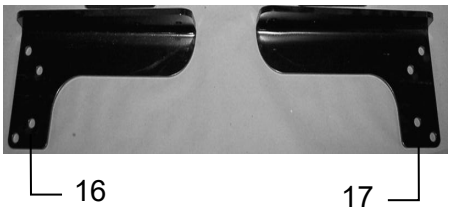


| Ref | Description | Part # | Qty | Ref | Description | Part # | Qty |
|---|---|---|---|---|---|---|---|
| 1 | U bolt | 001-4714UBS | 4 | 10 | Tip Strainer | 004-1203-100 | 2 |
| 2 | Hose Clamp | 003-9002 | 2 | 11 | Tip* | 004-XR11006VS | 2 |
| 3 | 1/4" x 1/4" Fitting | 003-A1414 | 5 | NP | Jiffy Clip | 008-9014 | 2 |
| 4 | 1/4" Sq Tee | 003-TT14SQ | 1 | 13 | Nozzle Body | 004-4722 | 2 |
| 5 | 1/4" St Elbow | 003-SE14F | 1 | 14 | Nozzle Cap | 004-4723 | 2 |
| 6 | Oetiker Clamp | 003-9008 | 4 | | | | |
| 7 | Nozzle Holder | 001-4714J | 2 | 15 | Tank Leg – Long | 001-4703B | 2 |
| 8 | Hose | 002-9016 | 3ft | 16 | Left Mounting Bracket | 001-4703DL | 1 |
| 9 | 1/4" x 1/4" Fitting | 003-A1414F | 2 | 17 | Right Mounting Bracket | 001-4703DR | 1 |

* Tip color subject to change

| | |
|---|---|
| Spray Shield Only (Ref 1-14) | 030-7714J-SO |
| Tank Mount Kit (Ref 15-17) | TMK-4504 |
| **Complete Assembly** | **030-4504X** |

# 4505X Install Kit Breakdown

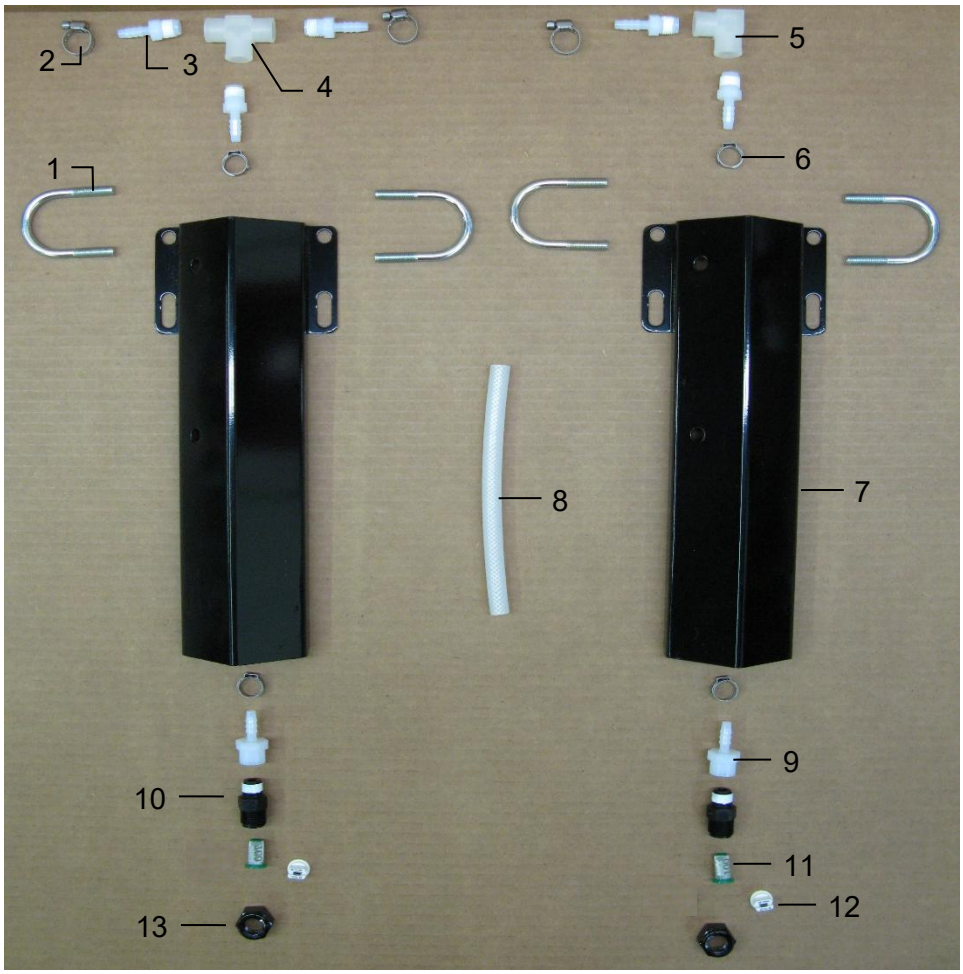


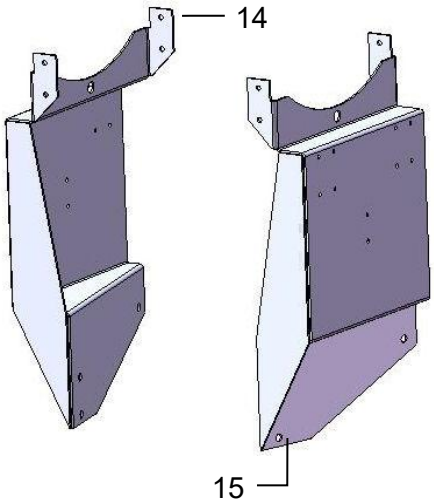


| Ref | Description | Part # | Qty |
|---|---|---|---|
| 1 | U Bolt | 001-4714UBS | 4 |
| 2 | Hose Clamp | 003-9002 | 2 |
| 3 | 1/4" x 1/4" Fitting | 003-A1414 | 5 |
| 4 | 1/4" Sq Tee | 003-TT14SQ | 1 |
| 5 | 1/4" Elbow Fitting | 003-SE14F | 1 |
| 6 | Oetiker Clamp | 003-9008 | 4 |
| 7 | Nozzle Holder | 001-4714J | 2 |
| 8 | Hose | 002-9016 | 3ft |
| 9 | 1/4" x 1/4" Fitting | 003-A1414F | 2 |

*Tip color subject to change

| Ref | Description | Part # | Qty |
|---|---|---|---|
| 10 | Nozzle Body | 004-4722 | 2 |
| 11 | Tip Strainer | 004-1203-100 | 2 |
| 12 | Tip* | 004-XR11006VS | 2 |
| 13 | Nozzle Cap | 004-4723 | 2 |
| 14 | Left Tank Leg | 001-4703FL | 1 |
| 15 | Right Tank Leg | 001-4703FR | 1 |
| NP | 477 Jiffy Clip | 008-9014 | 2 |

| | |
|---|---|
| Shield Only (Ref 1-13) | 030-7714J-SO |
| Tank Mount Kit (Ref 14-15) | TMK-4505 |
| **Complete Install Kit** | **030-4505X** |

# 4508X Installation Kit

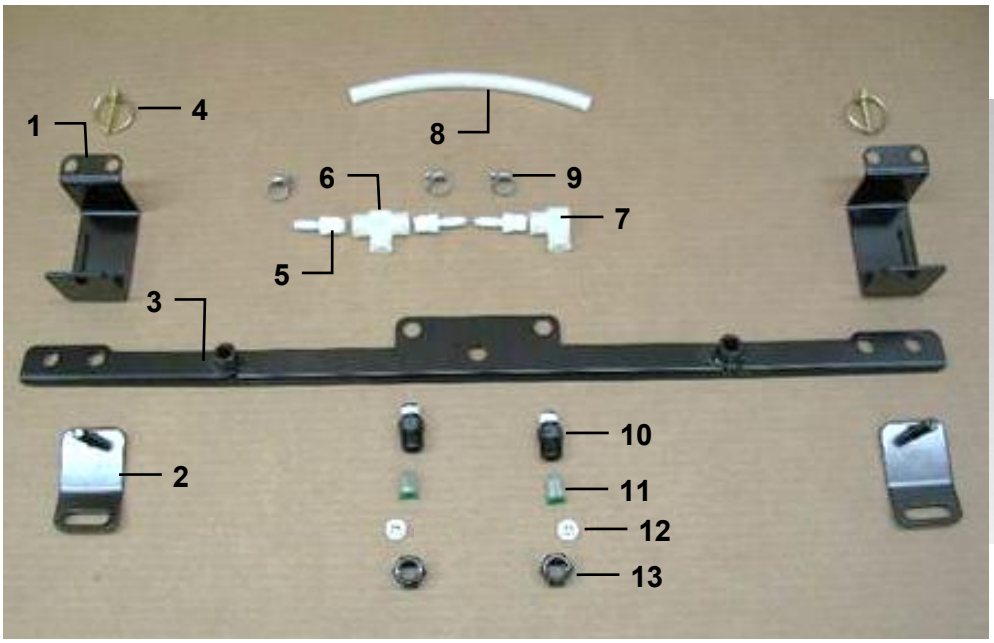


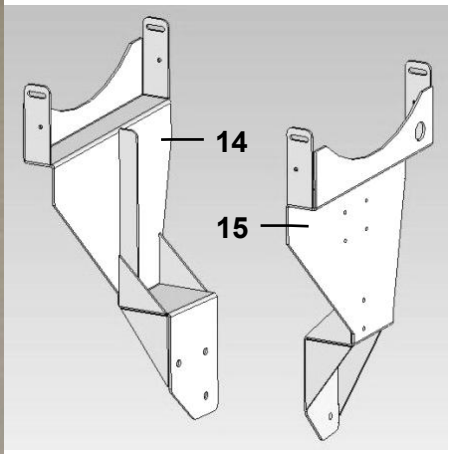


| Ref | Description | Part # | Qty |
|---|---|---|---|
| 1 | Shield Hanger | 001-4703JB | 2 |
| 2 | Spray Shield Holder | 001-4703JC | 1 |
| 3 | Spray Shield | 001-4703GR | 1 |
| 4 | Lynch Pin | 008-4576 | 2 |
| 5 | 1/4" MPTx1/4" HB | 003-A1414 | 3 |
| 6 | 1/4" FPT Tee | 003-TT14SQ | 1 |
| 7 | 1/4" Elbow | 003-SE14F | 1 |
| 8 | 1/4" Braided Hose | 002-9016 | 2ft |
| 9 | Mini Hose Clamp | 003-9002 | 3 |

| Ref | Description | Part # | Qty |
|---|---|---|---|
| 10 | Nozzle Body | 004-4722 | 2 |
| 11 | Tip Strainer | 004-1203-100 | 2 |
| 12 | Tip* | 004-XR11006VS | 2 |
| 13 | Nozzle Cap | 004-4723 | 2 |
| 14 | Left Tank Leg | 001-4703L | 1 |
| 15 | Right Tank Leg | 001-4703K | 1 |

* Tip color subject to change

| | |
|---|---|
| Spray Shield Only (Ref 1-13) | 030-4508X-SO |
| Tank Mount Kit (Ref 14-15) | TMK-4508 |
| **Complete Assembly** | **030-4508X** |

# 4516X Installation Kit

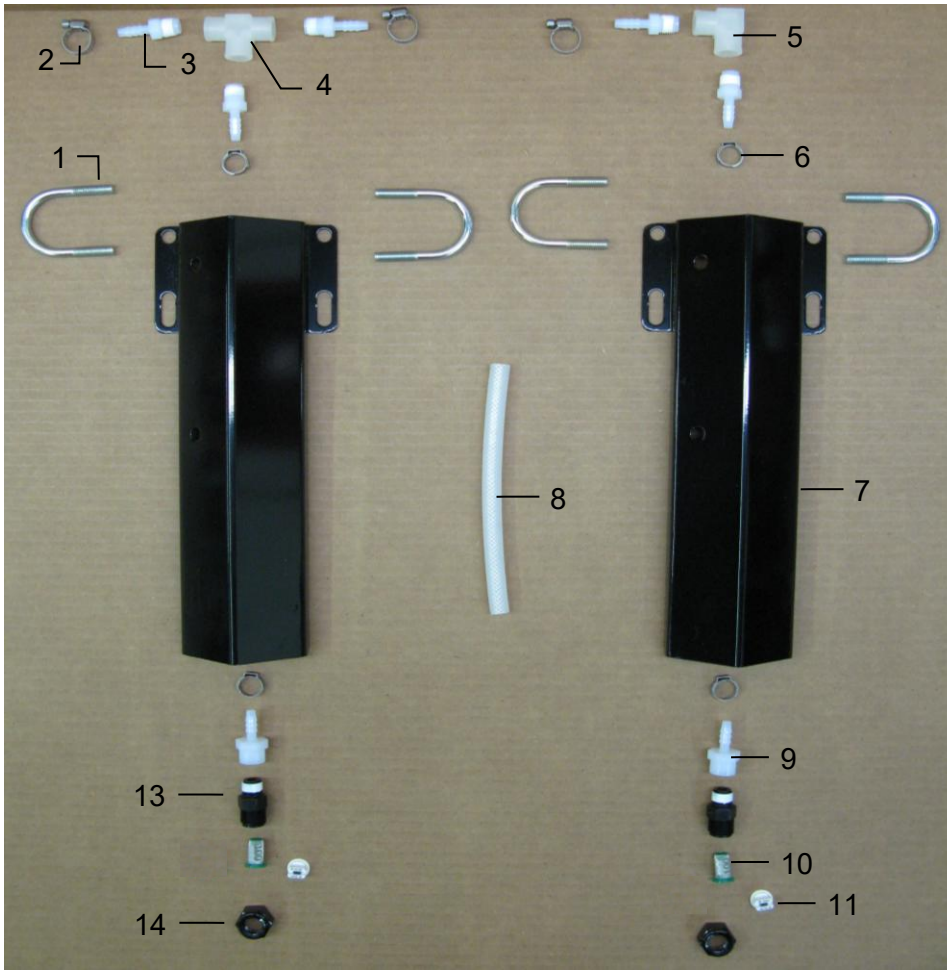


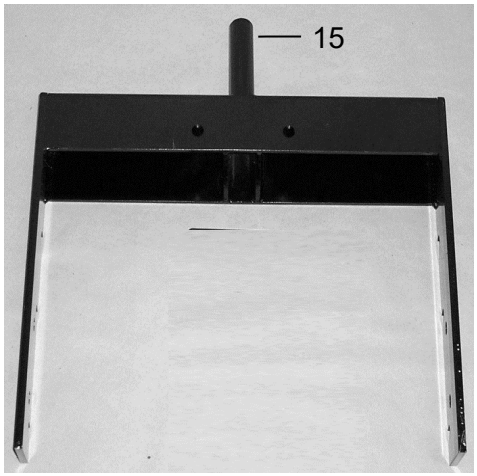


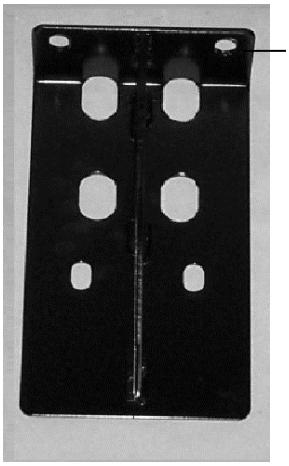


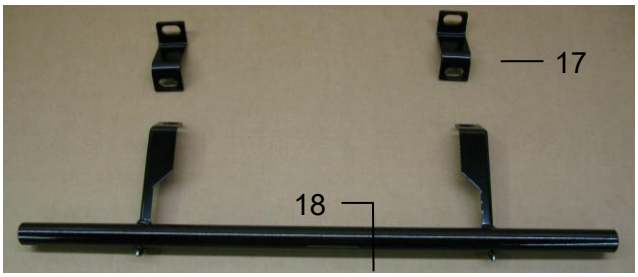


| Ref | Description | Part # | Qty |
|---|---|---|---|
| 1 | U bolt | 001-4714UBS | 4 |
| 2 | Hose Clamp | 003-9002 | 2 |
| 3 | 1/4" x 1/4" Fitting | 003-A1414 | 5 |
| 4 | 1/4" Sq Tee | 003-TT14SQ | 1 |
| 5 | 1/4" St Elbow | 003-SE14F | 1 |
| 6 | Oetiker Clamp | 003-9008 | 4 |
| 7 | Nozzle Holder | 001-4714J | 2 |
| 8 | Hose | 002-9016 | 3ft |
| 9 | 1/4" x 1/4" Fitting | 003-A1414F | 2 |
| 10 | Tip Strainer | 004-1203-100 | 2 |
| 11 | Tip* | 004-XR11006VS | 2 |

* Tip color subject to change

| Ref | Description | Part # | Qty |
|---|---|---|---|
| NP | Jiffy Clip | 008-9014 | 2 |
| 13 | Nozzle Body | 004-472 | 2 |
| 14 | Nozzle Cap | 001-4723 | 2 |
| 15 | Tank Mounting Bracket | 001-4411 | 1 |
| 16 | Tank Brace | 001-4411A | 1 |
| 17 | Spacer Bracket | 001-4703NS | 2 |
| 18 | Nozzle Tube Mount | 001-4703R | 1 |

| | |
|---|---|
| Spray Shield Only (1-14) | 030-7714J-SO |
| Tank Mount Kit (15-16) | TMK-4483 |
| Shield Mount Kit (17-18) | SMK-4516 |
| **Complete Assembly** | **030-4516X** |

# 4517X Install Kit Breakdown

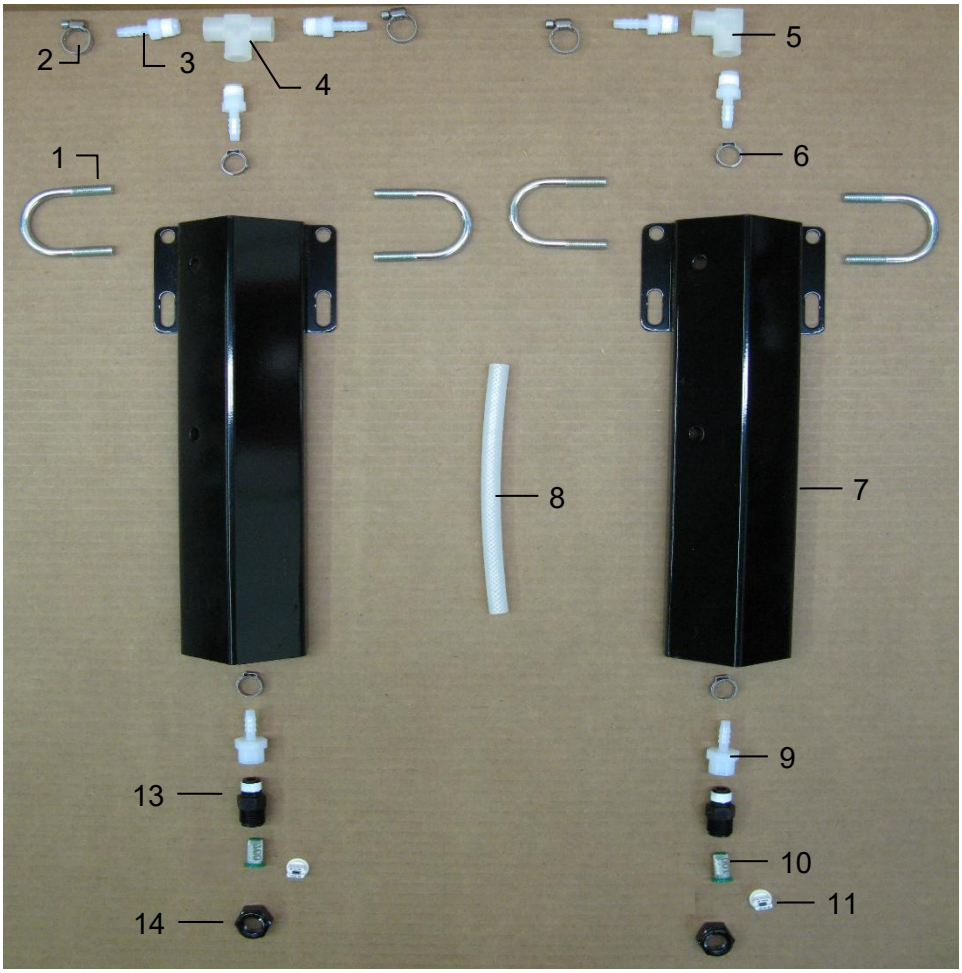


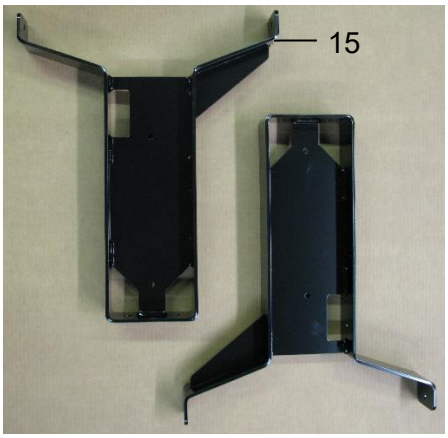

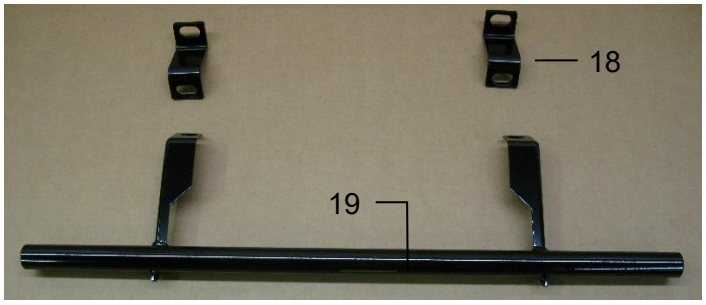


| Ref | Description | Part # | Qty |
|---|---|---|---|
| 1 | U Bolt | 001-4714UBS | 4 |
| 2 | Hose Clamp | 003-9002 | 2 |
| 3 | 1/4" x 1/4" Fitting | 003-A1414 | 5 |
| 4 | 1/4" Sq Tee | 003-TT14SQ | 1 |
| 5 | 1/4" St Elbow | 003-SE14F | 1 |
| 6 | Oetiker Clamp | 003-9008 | 4 |
| 7 | Nozzle Holder | 001-4714J | 2 |
| 8 | Hose | 002-9016 | 3ft |
| 9 | 1/4" x 1/4" Fitting | 003-A1414F | 2 |
| 10 | Tip Strainer | 004-1203-100 | 2 |
| 11 | Tip* | 004-XR11006VS | 2 |

* Tip color subject to change

| Ref | Description | Part # | Qty |
|---|---|---|---|
| NP | Jiffy Clip | 008-9014 | 2 |
| 13 | Nozzle Body | 004-4722 | 2 |
| 14 | Nozzle Cap | 004-4723 | 2 |
| 15 | Tank Leg | 001-4703B | 2 |
| 16 | Left Mounting Bracket | 001-4703DL | 1 |
| 17 | Right Mounting Bracket | 001-4703DR | 1 |
| 18 | Spacer Bracket | 001-4703NS | 2 |
| 19 | Nozzle Tube Mount | 001-4703R | 1 |

| | |
|---|---|
| Spray Shield Only (1-14) | 030-7714J-SO |
| Spray Shield Mount Kit (18-19) | SMK-4516 |
| Tank Mount Kit (15-17) | TMK-4504 |
| **Complete Assembly** | **030-4517X** |

# 4523X Install Kit Breakdown

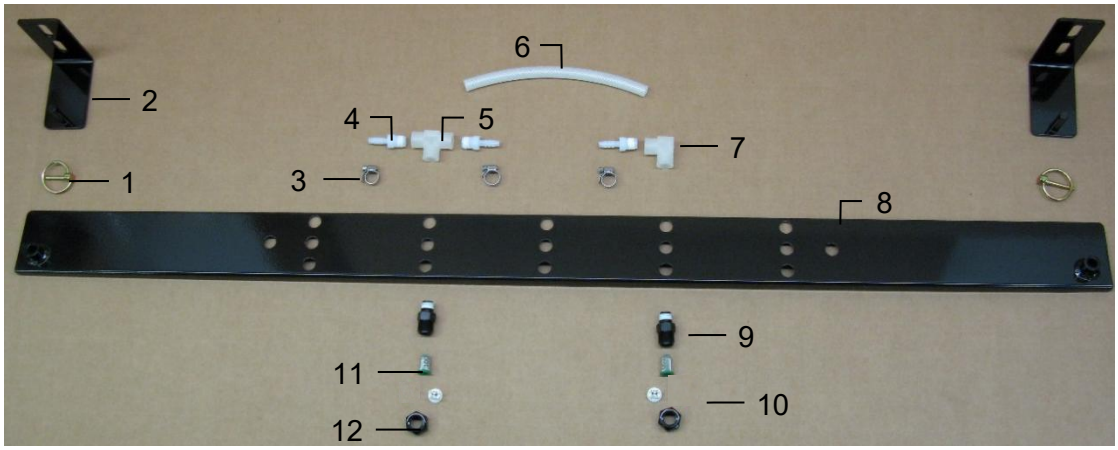


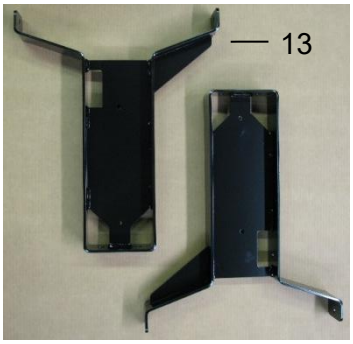


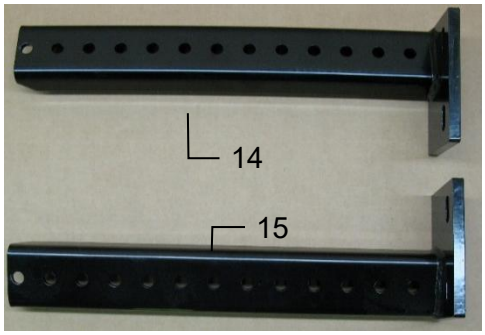


| Ref | Description | Part # | Qty |
|---|---|---|---|
| 1 | 3/16” Lynch Pin | 008-4576 | 2 |
| 2 | Shield Holder | 001-4704H | 2 |
| 3 | Mini Hose Clamp | 003-9002 | 3 |
| 4 | 1/4"FPT x 1/4"HB | 003-A1414 | 3 |
| 5 | 1/4" Tee Sq | 003-TT14SQ | 1 |
| 6 | 1/4" Hose | 002-9016 | 2ft |
| 7 | 1/4" Female Elbow | 003-SE14F | 1 |
| 8 | Spray Shield | 001-4704G | 1 |

*Tip color subject to change

| Ref | Description | Part # | Qty |
|---|---|---|---|
| 9 | Nozzle Body | 004-4722 | 2 |
| 10 | Tip* | 004-XR11006VS | 2 |
| 11 | Tip Strainer | 004-1203-100 | 2 |
| 12 | Nozzle Cap | 004-4723 | 2 |
| 13 | Tank Leg – Long | 001-4703B | 2 |
| 14 | Left RB Support | 001-4704JL | 1 |
| 15 | Right RB Support | 001-4704JR | 1 |

| | |
|---|---|
| Spray Shield Only (Ref 1-12) | 030-4523X-SO |
| Tank Mount Kit (Ref 13-15) | TMK-4523 |
| **Complete Assembly** | **030-4523X** |

# 4524X Installation Kit

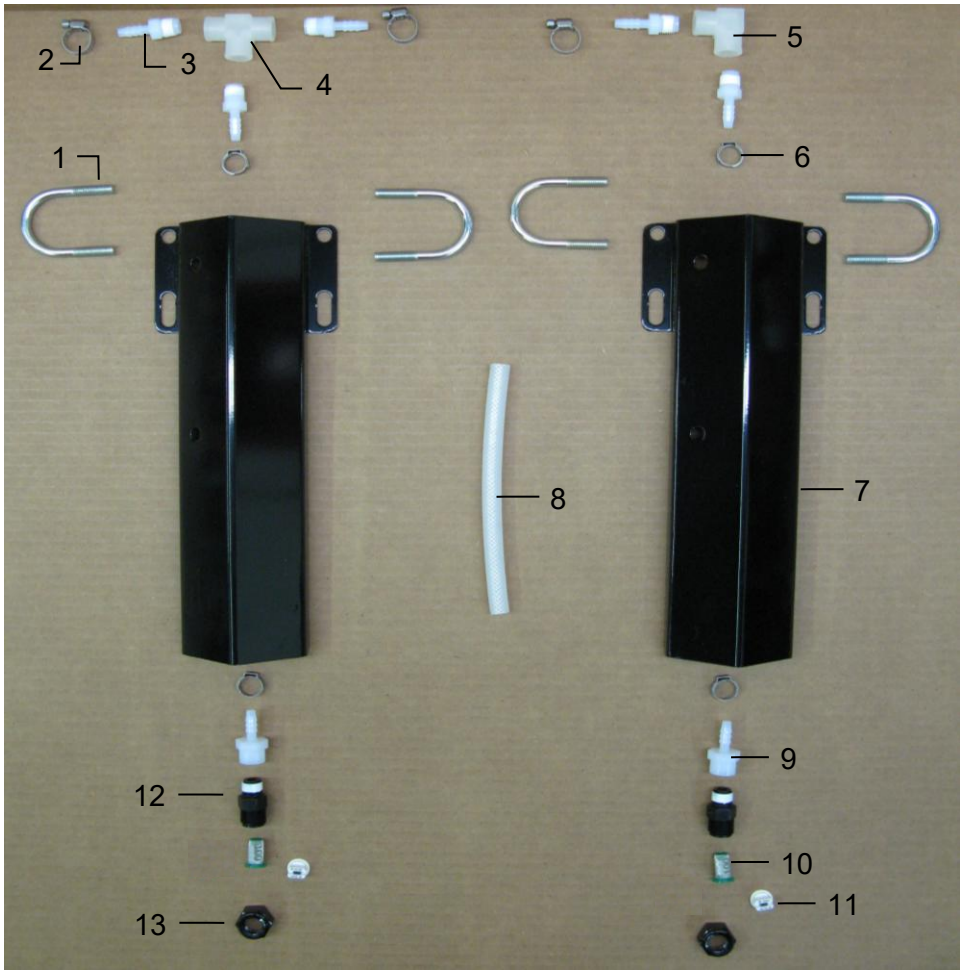


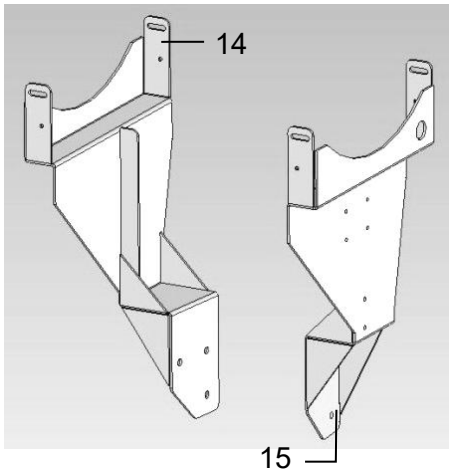


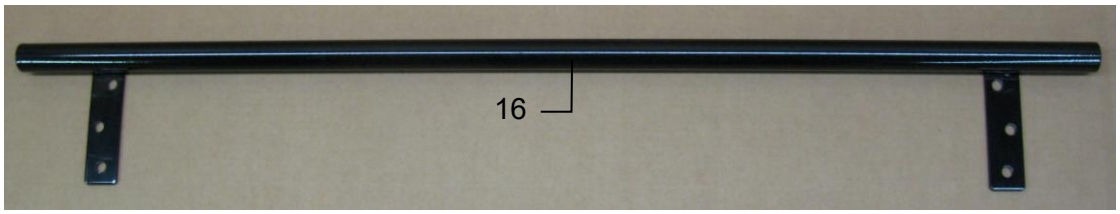


| Ref | Description | Part # | Qty |
|---|---|---|---|
| 1 | U bolt | 001-4714UBS | 4 |
| 2 | Hose clamp | 003-9002 | 2 |
| 3 | 1/4" x 1/4" Fitting | 003-A1414 | 5 |
| 4 | 1/4" Sq Tee | 003-TT14SQ | 1 |
| 5 | 1/4" St Elbow | 003-SE14F | 1 |
| 6 | Oetiker Clamp | 003-9008 | 4 |
| 7 | Nozzle Holder | 001-4714J | 2 |
| 8 | Hose | 002-9016 | 3ft |
| 9 | 1/4" x 1/4" Fitting | 003-A1414F | 2 |
| 10 | Tip Strainer | 004-1203-100 | 2 |

| Ref | Description | Part # | Qty |
|---|---|---|---|
| 11 | Tip* | 004-XR11006VS | 2 |
| 12 | Nozzle Body | 004-4722 | 2 |
| 13 | Nozzle Cap | 004-4723 | 2 |
| 14 | Left Tank Leg | 001-4703L | 1 |
| 15 | Right Tank Leg | 001-4703K | 1 |
| 16 | Nozzle Tube Mount | 001-4703T | 1 |

| | |
|---|---|
| Spray Shield Only (1-13) | 030-7714J-SO |
| Tank Mount Kit (14-15) | TMK-4508 |
| Shield Mounting Kit (16) | SMK-4524 |
| **Complete Assembly** | **030-4524X** |

* Tip color subject to change

# 4526X Installation Kit

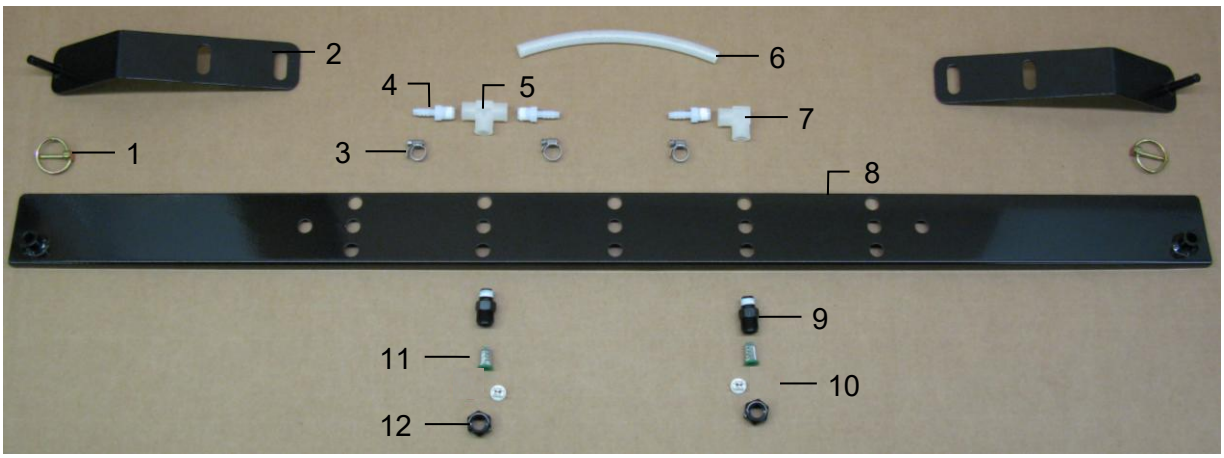


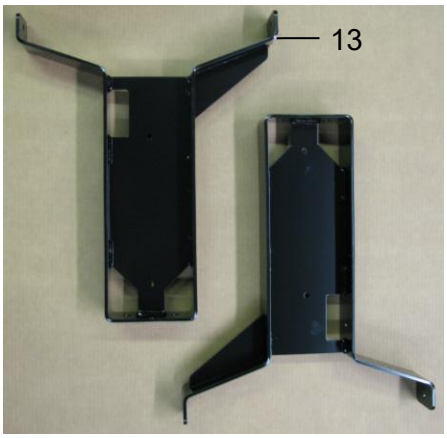

| Ref | Description | Part # | Qty |
|---|---|---|---|
| 1 | 3/16” Lynch Pin | 008-4576 | 2 |
| 2 | Shield Holder | 001-4704MC | 2 |
| 3 | Mini Hose Clamp | 003-9002 | 3 |
| 4 | 1/4"FPT x 1/4"HB | 003-A1414 | 3 |
| 5 | 1/4" Sq Tee | 003-TT14SQ | 1 |
| 6 | 1/4" Hose | 002-9016 | 2ft |
| 7 | 1/4" Female Elbow | 003-SE14F | 1 |
| 8 | Spray Shield | 001-4704G | 1 |
| 9 | Nozzle Body | 004-4722 | 2 |

*Tip color subject to change

| Ref | Description | Part # | Qty |
|---|---|---|---|
| 10 | Tip* | 004-XR11006VS | 2 |
| 11 | Tip Strainer | 004-1203-100 | 2 |
| 12 | Nozzle Cap | 004-4723 | 2 |
| 13 | 55 Gal Tank Leg | 001-4703B | 2 |
| 14 | Side Support | 001-4704MA | 2 |
| 15 | Brace Support | 001-4704MD | 2 |
| 16 | Top Support | 001-4704ME | 1 |

| | |
|---|---|
| Spray Shield Only (Ref 1-12) | 030-4526X-SO |
| Tank Mount Kit (Ref 13-16) | TMK-4526 |
| **Complete Assembly** | **030-4526X** |

# 4531X Installation Kit

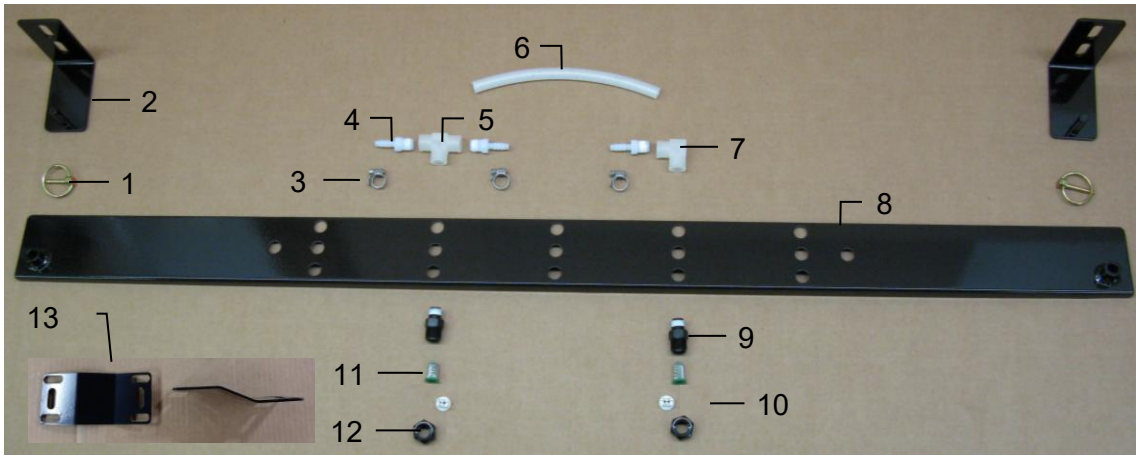


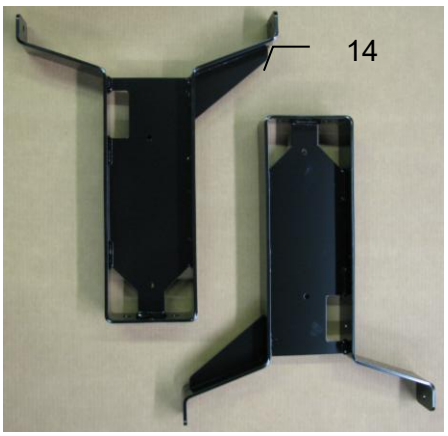


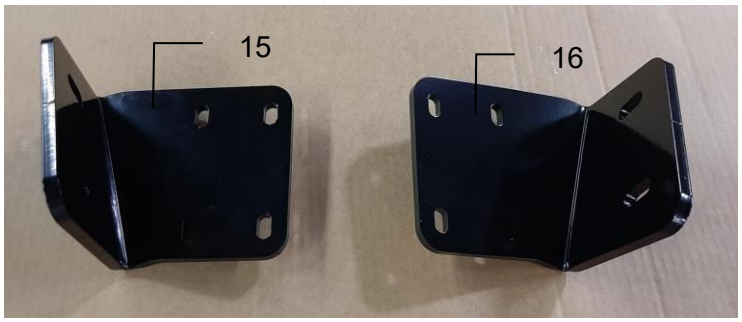


| Ref | Description | Part # | Qty | Ref | Description | Part # | Qty |
|---|---|---|---|---|---|---|---|
| 1 | 3/16” Lynch Pin | 008-4576 | 2 | 9 | Nozzle Body | 004-4722 | 2 |
| 2 | Shield Holder | 001-4704H | 2 | 10 | Tip* | 004-XR11006VS | 2 |
| 3 | Mini Hose Clamp | 003-9002 | 3 | 11 | Tip Strainer | 004-1203-100 | 2 |
| 4 | 1/4"FPT x 1/4"HB | 003-A1414 | 3 | 12 | Nozzle Cap | 004-4723 | 2 |
| 5 | 1/4" Tee Sq | 003-TT14SQ | 1 | 13 | Hanger Extender** | 001-4704HZ | 2 |
| 6 | 1/4" Hose | 002-9016 | 2ft | 14 | Tank Leg – Long | 001-4703B | 2 |
| 7 | 1/4" Female Elbow | 003-SE14F | 1 | 15 | Left Tank Leg Support | 001-ACX2873560 | 1 |
| 8 | Spray Shield | 001-4704G | 1 | 16 | Right Tank Leg Support | 001-ACX2873280 | 1 |

* Tip color subject to change

Spray Shield Only** (Ref 1-12) 030-4523X-SO
(**hanger extenders not included)
Tank Mount Kit (Ref 13-15) TMK-4531
**Complete Assembly** **030-4531X**

# 4538X Installation Kit

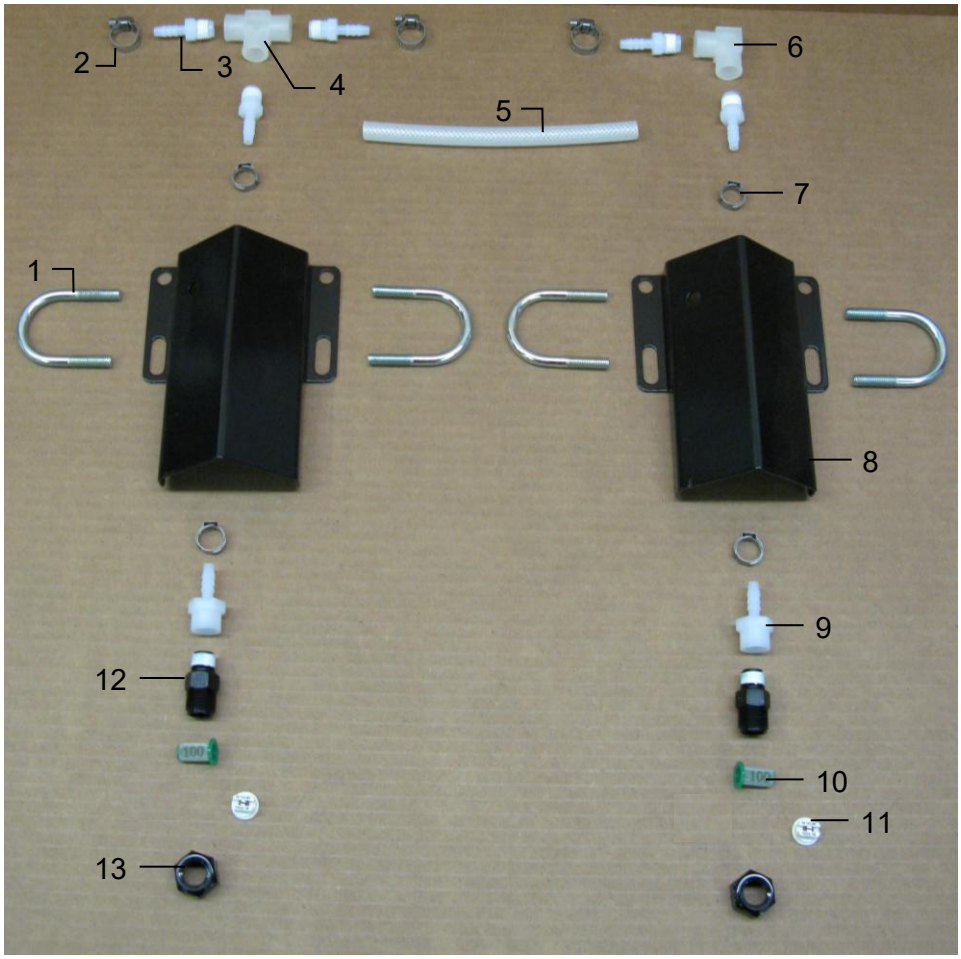


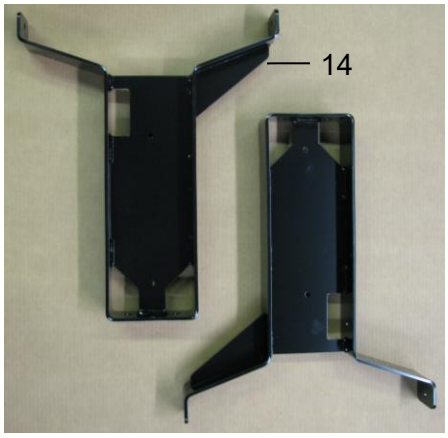

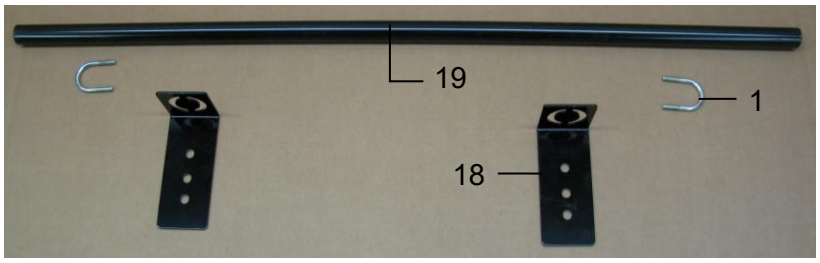


| Ref | Description | Part # | Qty |
|---|---|---|---|
| 1 | U bolt | 001-4714UBS | 4 |
| 2 | Hose Clamp | 003-9002 | 3 |
| 3 | 1/4" x 1/4" Fitting | 003-A1414 | 5 |
| 4 | 1/4" Sq Tee | 003-TT14SQ | 1 |
| 5 | Hose | 002-9016 | 4ft |
| 6 | 1/4" St Elbow | 003-SE14F | 1 |
| 7 | Oetiker Clamp | 003-9008 | 4 |
| 8 | Nozzle Holder | 001-4714JS | 2 |
| 9 | 1/4" x 1/4" Fitting | 003-A1414F | 2 |
| 10 | Tip Strainer | 004-1203-100 | 2 |
| 11 | Tip* | 004-XR11006VS | 2 |

| Ref | Description | Part # | Qty |
|---|---|---|---|
| 12 | Nozzle Body | 004-4722 | 2 |
| 13 | Nozzle Cap | 004-4723 | 2 |
| 14 | Tank Leg – Long | 001-4703B | 2 |
| 15 | Side Tank Support | 001-4704MA | 2 |
| 16 | Brace Tank Support | 001-4704MDJ | 2 |
| 17 | Top Tank Support | 001-4704MEJ | 1 |
| 18 | Univ. Nozzle Mount Holder | 001-4703TH | 2 |
| 19 | Univ. Nozzle Mount Tube | 001-4703TP | 1 |

| | |
|---|---|
| Spray Shield Only (Ref 1-14) | 030-7714JS-SO |
| Shield Mounting Kit (1,18,19) | SMK-UNIV-PIPE |
| Tank Mount Kit (Ref 14-17) | TMK-4538 |
| **Complete Assembly** | **030-4538X** |

* Tip color subject to change

# 4543X Installation Kit

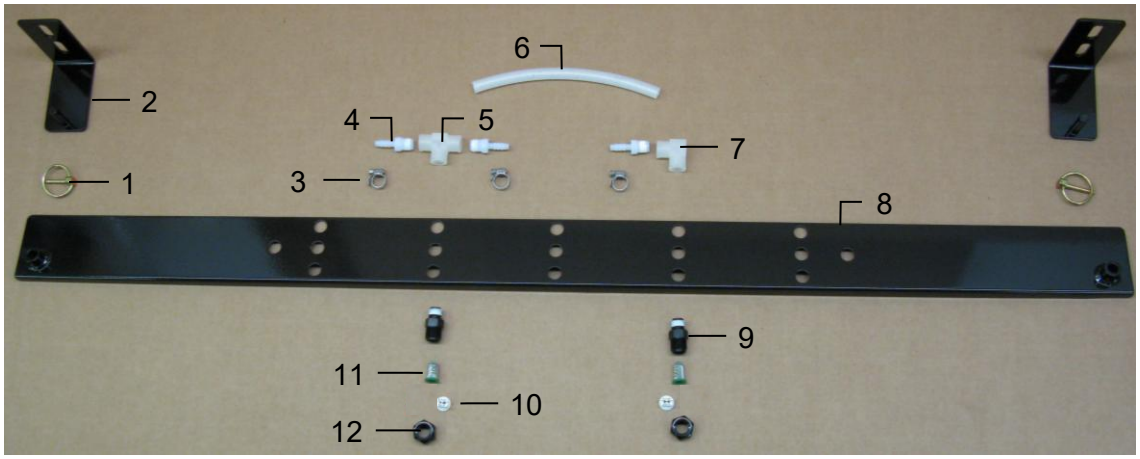


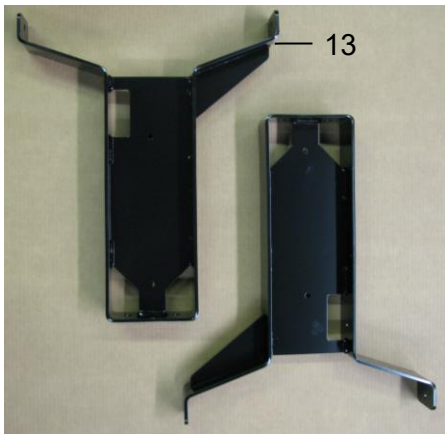


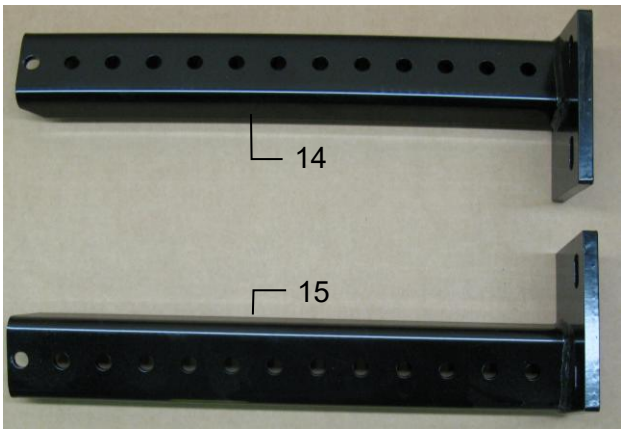


| Ref | Description | Part # | Qty |
|---|---|---|---|
| 1 | 3/16” Lynch Pin | 008-4576 | 2 |
| 2 | Shield Holder | 001-4704H | 2 |
| 3 | Mini Hose Clamp | 003-9002 | 3 |
| 4 | 1/4"FPT x 1/4"HB | 003-A1414 | 3 |
| 5 | 1/4" Tee Sq | 003-TT14SQ | 1 |
| 6 | 1/4" Hose | 002-9016 | 2ft |
| 7 | 1/4" Female Elbow | 003-SE14F | 1 |
| 8 | Spray Shield | 001-4704G | 1 |
| 9 | Nozzle Body | 004-4722 | 2 |

| Ref | Description | Part # | Qty |
|---|---|---|---|
| 10 | Tip* | 004-XR11006VS | 2 |
| 11 | Tip Strainer | 004-1203-100 | 2 |
| 12 | Nozzle Cap | 004-4723 | 2 |
| 13 | Tank Leg – Long | 001-4703B | 2 |
| 14 | Left RB Support | 001-4704JL | 1 |
| 15 | Right RB Support | 001-4704JR | 1 |
| 16 | 604 Pro RT Bkt | 001-6055VER | 1 |
| 17 | 604 Pro LT Bkt | 001-6055VEL | 1 |

* Tip color subject to change

| | |
|---|---|
| Spray Shield Only (Ref 1-12) | 030-4523X-SO |
| Tank Mount Kit (Ref 13-15) | TMK-4543 |
| **Complete Assembly** | **030-4543X** |

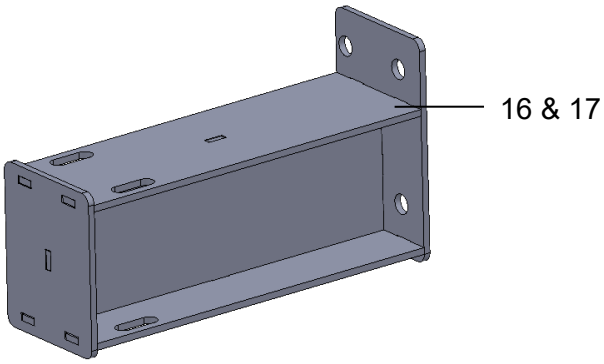

# 4546X Installation Kit

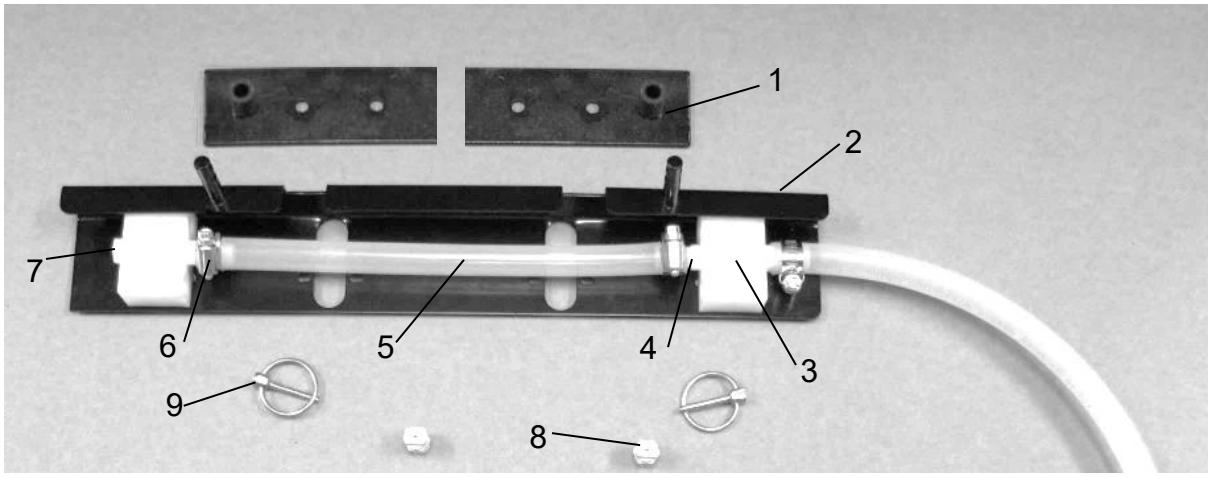


| Ref | Description | Part # | Qty | Ref | Description | Part # | Qty |
|---|---|---|---|---|---|---|---|
| 1 | Shield Holder | 001-4435NCX | 1 | 8 | Tip* | 004-T8006-PT | 2 |
| 2 | Spray Shield | 001-4435NSX | 1 | NP | Clamping U-bolt 2” | 001-4714UBX | 2 |
| 3 | Manifold Block | 001-4435NSB | 2 | 9 | Lynch Pin | 008-4576 | 2 |
| 4 | Straight Fitting | 003-A1414 | 3 | | | | |
| 5 | Braided Hose-1/4” | 002-9016 | 1 ft | 11 | Tank Mounting Bracket | 001-4411 | 1 |
| 6 | Hose Clamp | 003-9002 | 3 | 12 | Tank Brace | 001-4411A | 1 |
| 7 | Hex Plug | 003-F14 | 1 | | | | |

* Tip color subject to change

| | |
|---|---|
| Spray Shield Only (1-11) | 030-4546X-SO |
| Tank Mount Kit (12-13) | TMK-4483 |
| **Complete Assembly** | **030-4546X** |

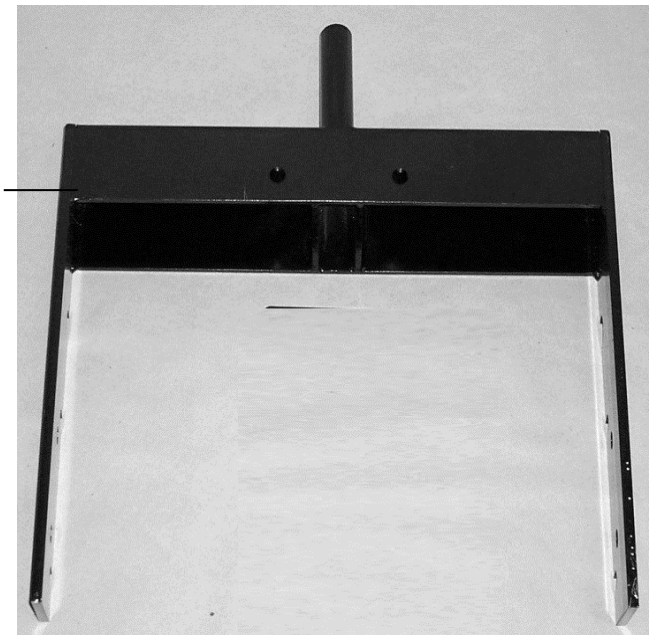


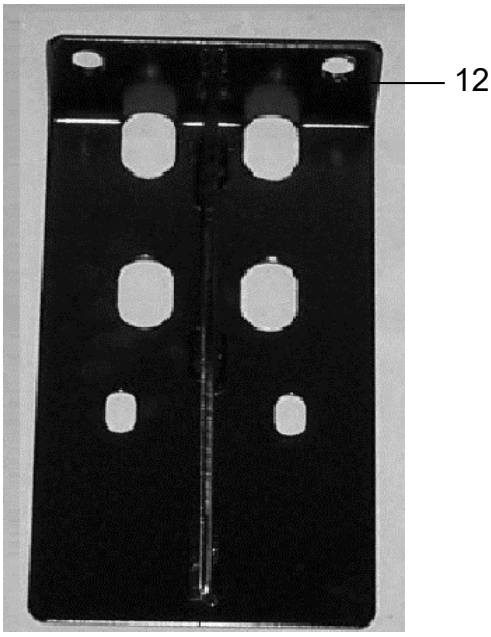

# 4547X Installation Kit

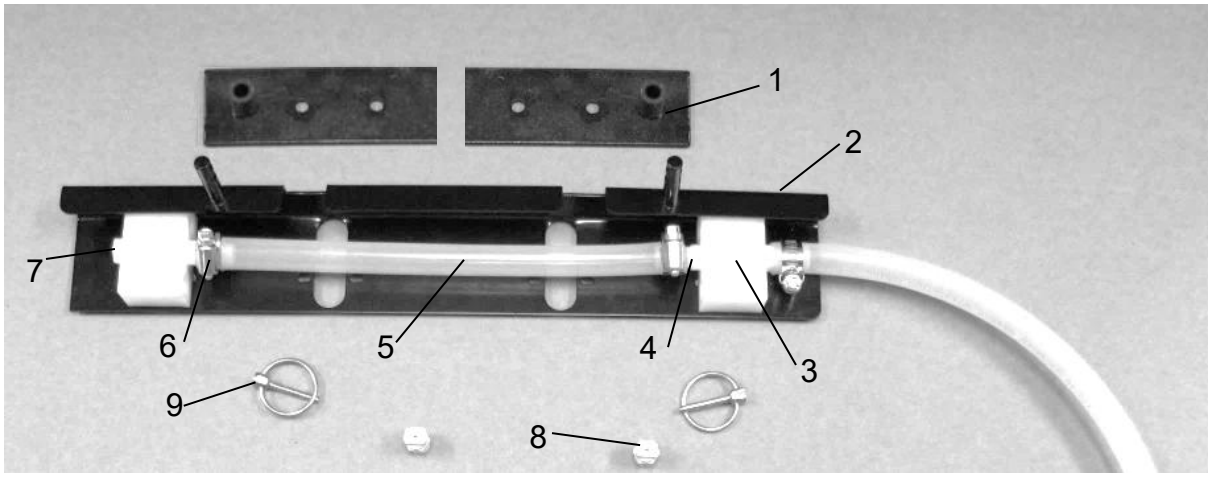


| Ref | Description | Part # | Qty | Ref | Description | Part # | Qty |
|---|---|---|---|---|---|---|---|
| 1 | Shield Holder | 001-4435NCX | 1 | 8 | Tip* | 004-T8006-PT | 2 |
| 2 | Spray Shield | 001-4435NSX | 1 | NP | Clamping U-bolt 2” | 001-4714UBX | 2 |
| 3 | Manifold Block | 001-4435NSB | 2 | 9 | Lynch Pin | 008-4576 | 2 |
| 4 | Straight Fitting | 003-A1414 | 3 | | | | |
| 5 | Braided Hose-1/4” | 002-9016 | 1 ft | 10 | Tank Leg -Long | 001-4703B | 2 |
| 6 | Hose Clamp | 003-9002 | 3 | 11 | Mounting Bracket -Left | 001-4703DL | 1 |
| 7 | Hex Plug | 003-F14 | 1 | 12 | Mounting Bracket -Right | 001-4703DR | 1 |

* Tip color subject to change

| | |
|---|---|
| Spray Shield Only (1-11) | 030-4546X-SO |
| Tank Mount Kit (12-13) | TMK-4504 |
| **Complete Assembly** | **030-4547X** |

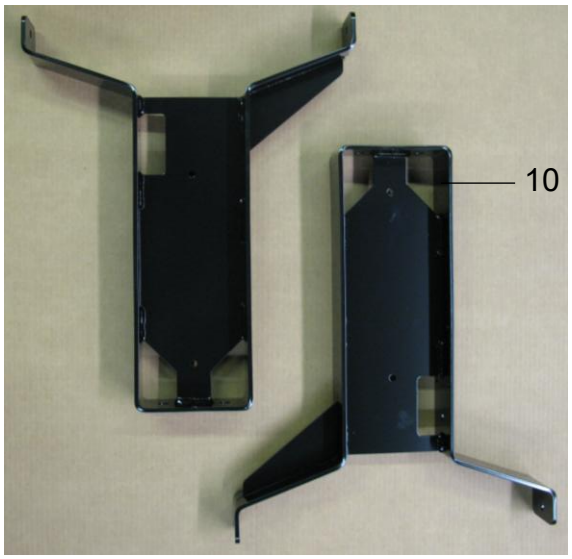


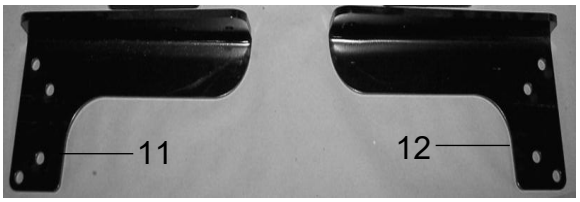

# 4549X Installation Kit

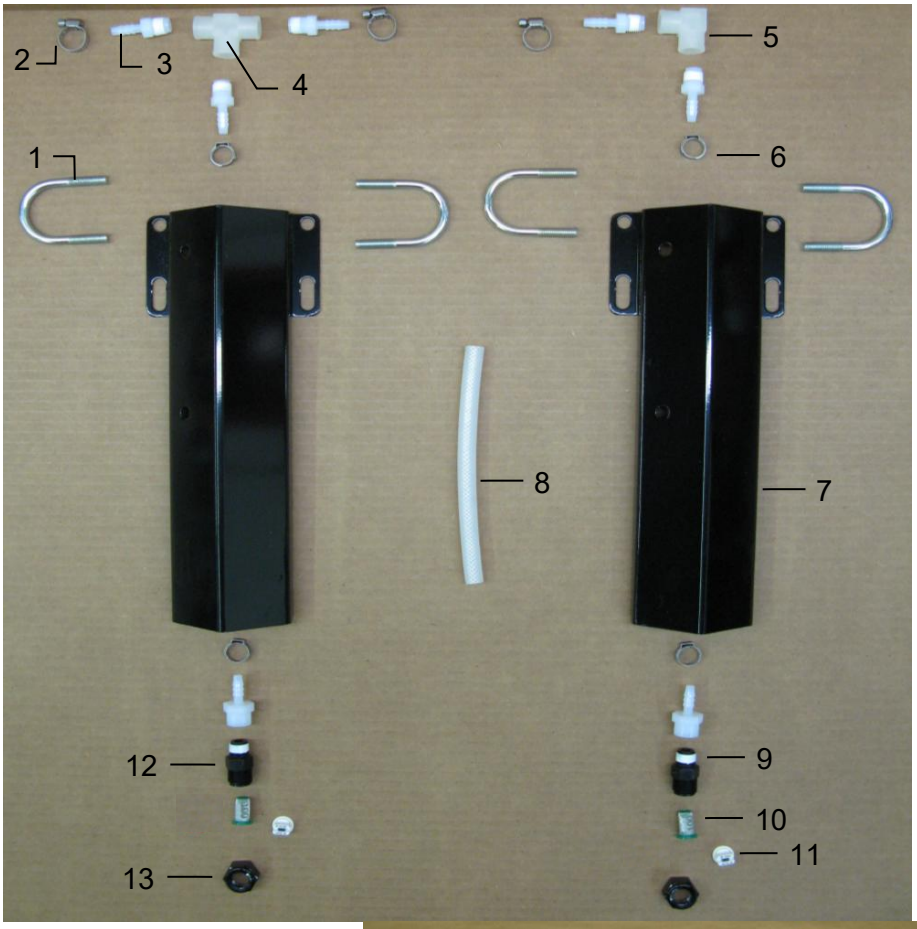


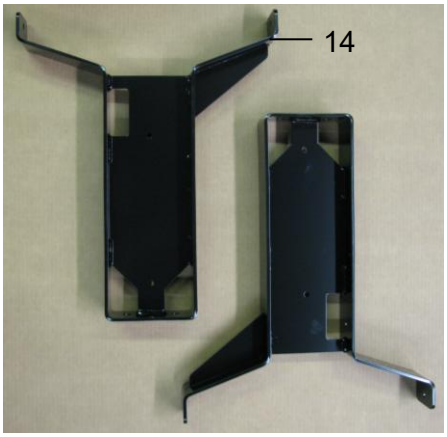


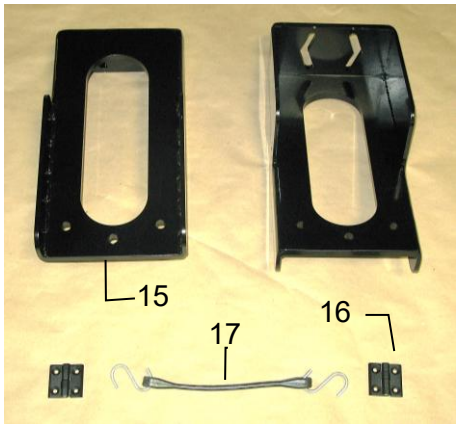


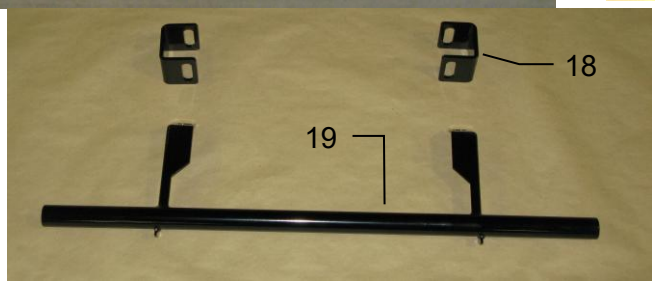


| Ref | Description | Part # | Qty |
|---|---|---|---|
| 1 | U bolt | 001-4714UBS | 4 |
| 2 | Hose Clamp | 003-9002 | 2 |
| 3 | 1/4" x 1/4" Fitting | 003-A1414 | 5 |
| 4 | 1/4" Sq Tee | 003-TT14SQ | 1 |
| 5 | 1/4" St Elbow | 003-SE14F | 1 |
| 6 | Oetiker Clamp | 003-9008 | 4 |
| 7 | Nozzle Holder | 001-4714J | 2 |
| 8 | Hose | 002-9016 | 3ft |
| 9 | 1/4" x 1/4" Fitting | 003-A1414F | 2 |
| 10 | Tip Strainer | 004-1203-100 | 2 |
| 11 | Tip* | 004-XR11006VS | 2 |
| NP | Jiffy Clip | 008-9014 | 2 |
| 12 | Nozzle Body | 004-4722 | 2 |
| 13 | Nozzle Cap | 004-4723 | 2 |

| Ref | Description | Part # | Qty |
|---|---|---|---|
| 14 | Tank Leg | 001-4703B | 2 |
| 15 | Mounting Bracket | 001-4703F | 2 |
| 16 | Hinge | 001-4703VHG | 2 |
| 17 | Latch | 001-4703CL | 1 |
| 18 | Spacer Bracket | 001-4703NV | 2 |
| 19 | Nozzle Tube | 001-4703R | 1 |

* Tip color subject to change

| | |
|---|---|
| Spray Shield Only (1-13) | 030-7714J-SO |
| Tank Mount Kit (14-17) | TMK-4549 |
| Shield Mount Kit (18-19) | SMK-4549 |
| **Complete Assembly** | **030-4549X** |

# 4555X Installation Kit

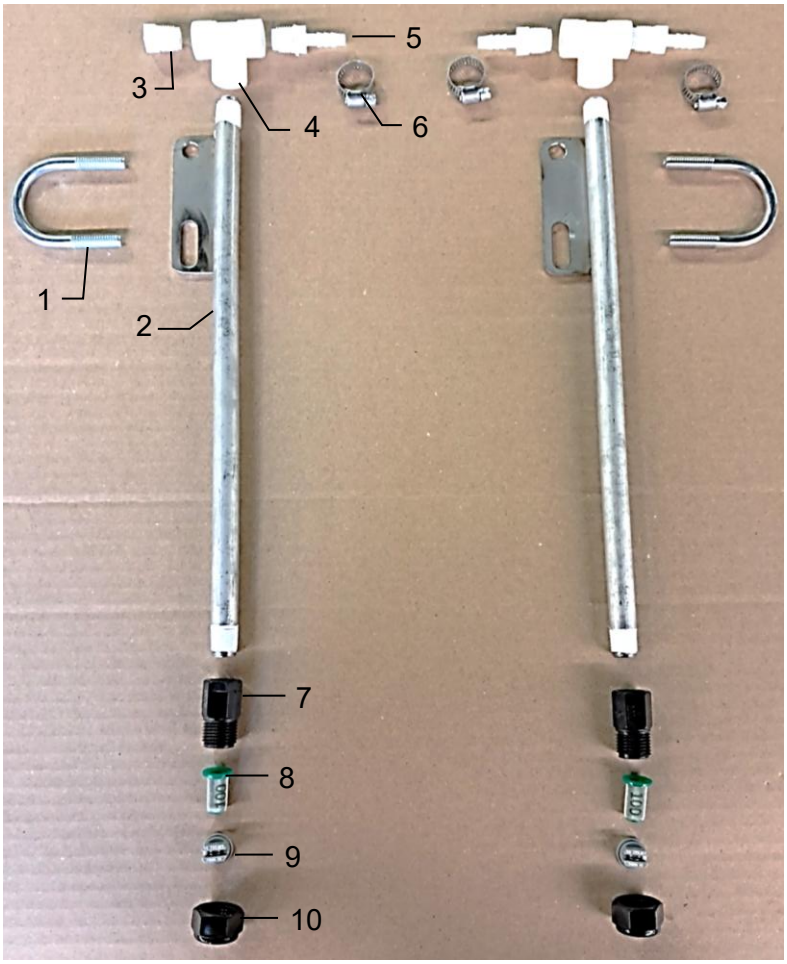


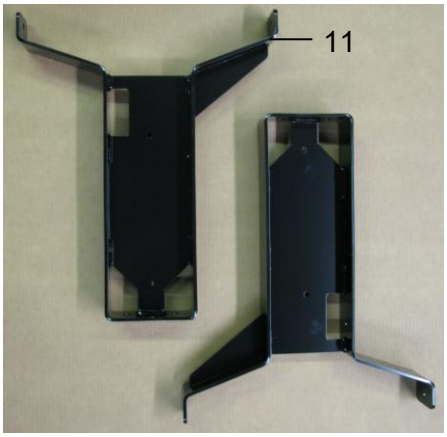


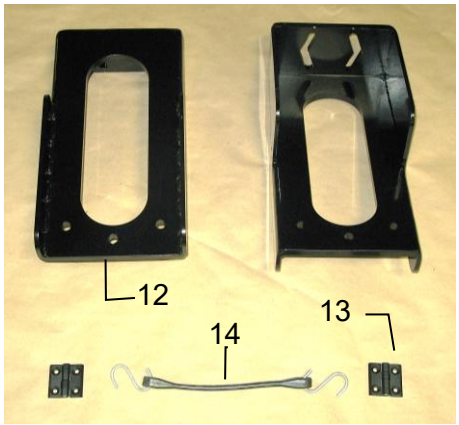


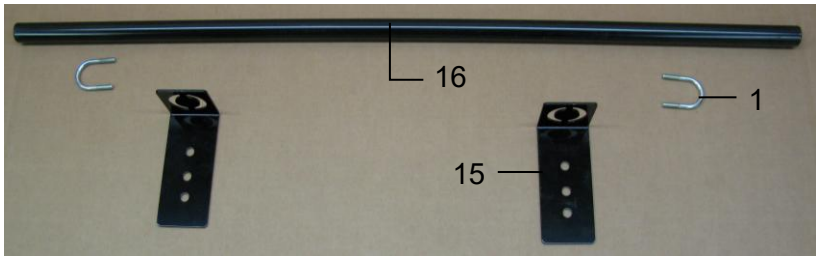


| Ref | Description | Part # | Qty |
|---|---|---|---|
| 1 | U bolt | 001-4714UBS | 4 |
| 2 | Nozzle Tube | 001-4717 | 2 |
| 3 | Hex Plug | 003-F14 | 1 |
| 4 | 1/4" Tee | 003-TT14 | 2 |
| 5 | 1/4” MPT x 1/4” HB | 003-A1414 | 3 |
| 6 | Mini Hose Clamp | 003-9002 | 4 |
| 7 | Nozzle Body -Std | 004-4721 | 2 |
| 8 | Tip Strainer -100msh | 004-1203-100 | 2 |
| 9 | Tip* | 004-XR11006VS | 2 |
| 10 | Nozzle Cap | 004-4723 | 2 |

*tip colors subject to change

| Ref | Description | Part # | Qty |
|---|---|---|---|
| 11 | Tank Leg | 001-4703B | 2 |
| 12 | Mounting Bracket | 001-4703F | 2 |
| 13 | Hinge | 001-4703VHG | 2 |
| 14 | Latch | 001-4703CL | 1 |
| 15 | Pipe Mount Bracket | 001-4703TH | 2 |
| 16 | Nozzle Tube Mount Pipe | 001-4703TP | 1 |
| NP | Rubber Bumper | 008-4555 | 2 |

| | |
|---|---|
| Tank Mount Kit (11-14) | TMK-4549 |
| Nozzle Tube Mount Kit (1,15-16) | SMK-UNIV-PIPE |
| **Complete Assembly** | **030-4555X** |

## Harvest Tec LLC. Warranty and Liability Agreement

Harvest Tec, LLC. will repair or replace components that are found to be defective within 12 months from the date of manufacture. Under no circumstances does this warranty cover any components which in the opinion of Harvest Tec, LLC. have been subjected to negligent use, misuse, alteration, accident, or if repairs have been made with parts other than those manufactured and obtainable from Harvest Tec, LLC.

Our obligation under this warranty is limited to repairing or replacing free of charge to the original purchaser any part that in our judgment shows evidence of defective or improper workmanship, provided the part is returned to Harvest Tec, LLC. within 30 days of the failure. If it is determined that a non-Harvest Tec manufactured product has been used inside the Harvest Tec applicator system where the failure occurred, then Harvest Tec reserves the right to deny the warranty request at their discretion. Parts must be returned through the selling dealer and distributor, transportation charges prepaid.

This warranty shall not be interpreted to render Harvest Tec, LLC. liable for injury or damages of any kind, direct, consequential, or contingent, to persons or property. Furthermore, this warranty does not extend to loss of crop, losses caused by delays or any expense prospective profits or for any other reason. Harvest Tec, LLC. shall not be liable for any recovery greater in amount than the cost or repair of defects in workmanship.

There are no warranties, either expressed or implied, of merchantability or fitness for particular purpose intended or fitness for any other reason. This warranty cannot guarantee that existing conditions beyond the control of Harvest Tec, LLC. will not affect our ability to obtain materials or manufacture necessary replacement parts.

Harvest Tec, LLC. reserves the right to make design changes, improve design, or change specifications, at any time without any contingent obligation to purchasers of machines and parts previously sold.

Revised 1/24

**HARVEST TEC, LLC.**
**P.O. BOX 63**
**2821 HARVEY STREET**
**HUDSON, WI 54016 USA**
PHONE: 715-386-9100
FAX: 715-381-1792
Email: info@harvesttec.com