Installation Manual

Model 700BB & 700BBHD

Moisture Sensor Kit for Large Square Balers
For New Holland BigBaler and Case IH LB 4

HarvestTec®

EST. 1976

700BB & 700BBHD-26-INST-Imp&Metric
9/26

Table of Contents

	PAGE
Introduction	**2**
ISO Pump Module (IPM) Processor Installation	**3**
Star Wheel Moisture Sensors	**4-8**
Moisture Sensor Installation – 700BB	**6**
Moisture Sensor Installation – 700BBHD	**8**
End of Bale Sensor	**9-10**
Control Box, Main Wire Harness and Connections	**10-11**
Tractor Setup	**12**
Display Options	**13-17**
700BB Baler Display Integration	**17-23**
700BBHD Baler Display Integration	**24-26**
Wiring Diagram	**27**
Pin Outs	**28-30**
Warranty	**31**

Introduction

Thank you for purchasing the 700 series moisture system. This system has been designed to be operated through the Harvest Tec display, an iOS or Android tablet (not included) using the Precision Baling App, or to plug directly into the baler's ISOBUS and display.

The 700 Series Moisture System is designed to be expandable and be able to apply Harvest Tec Baler's Choice buffered propionic acid to the forage crop as it is baled. Failure to follow instructions can result in personal injury or equipment malfunction. If you need parts for the system, please view the Parts Breakdown and contact your local authorized dealer to order the parts.

Right and Left sides are determined by facing in the direction of forward travel.

System Requirements

CNH Baler Monitor must have version 4.2.0 or higher

Made for Harvest Tec Display, Baler Integration, or Tablet
For best performance ensure all displays are running the latest operating system.

In order for the CNH Baler to receive the messages regarding Status, Moisture and display this information on the Baler Work Screen, the software in the Baler Control Module (BCM) needs to be updated to version 4.2.0.0 or higher. Dealers can log an ASIST incident and request the BCM software from CNH Technical Support Services if they need the software prior to those release dates.

Tools Needed

Standard Wrench set
Electric drill and bits
Side cutter
Standard Socket Set
Hammer
Center punch

Installation – 700BB and 700BBHD

ISO Pump Module (IPM) Processor

Follow the instructions below to mount the ISO Pump Module (IPM) Processor onto the baler. The locations shown are on the right twine box (looking form the back of the baler). Mark and drill the two 3/8 (10mm) holes and install the (IPM) with two 5/16 x 1 bolts, four 1/4” washers, and two 5/16” nylock nuts. Main harness whip coming out of (IPM) should point to the ground. When attaching other harness make sure to loop them below the (IPM) so as not to funnel water into the control.

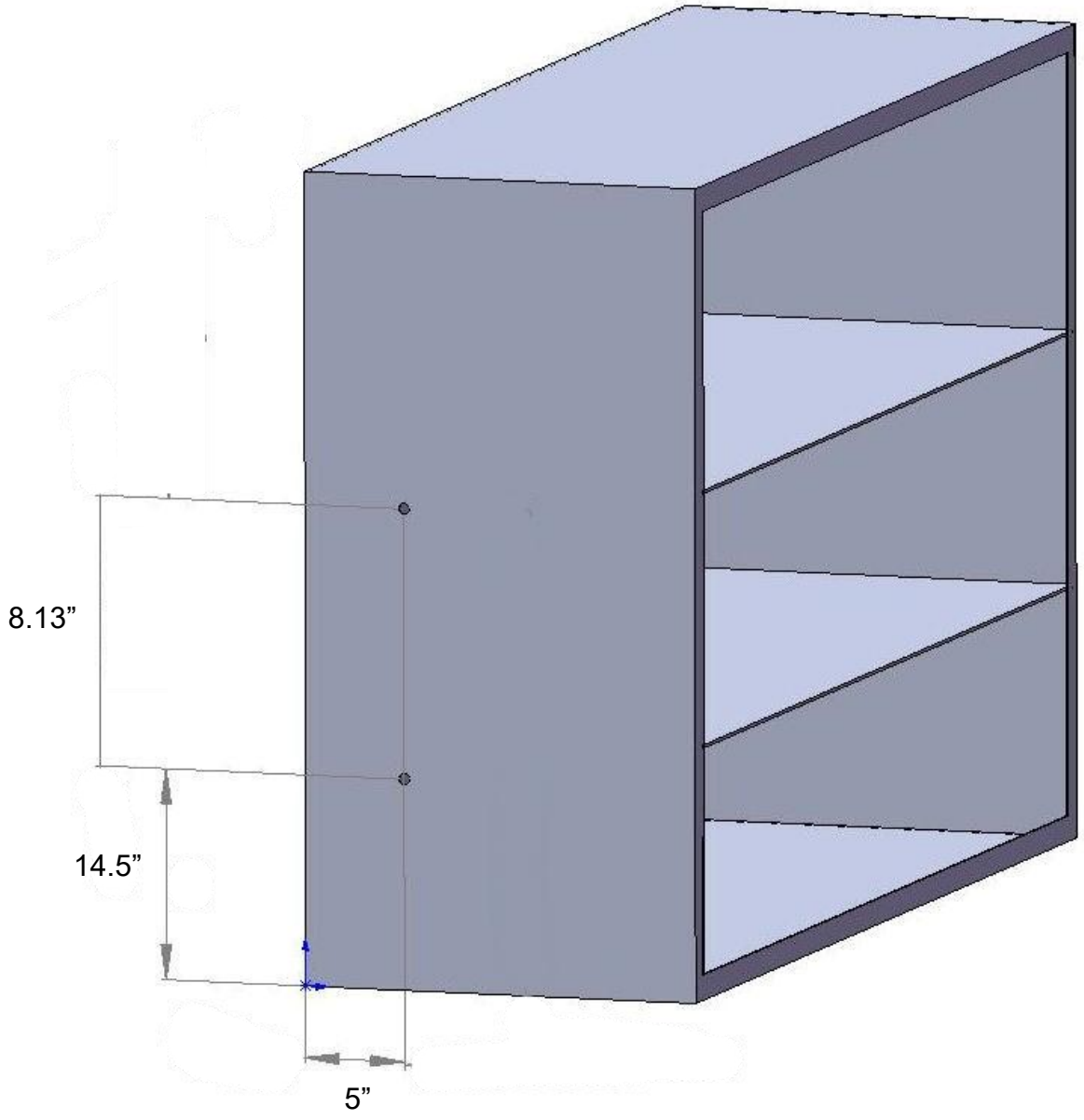

Star Wheel Moisture Sensor Kit

1. Locate both two-star wheel moisture sensors (030-4642U / UE), twine diverters (001-4644H / 4645H), spacer plates (001-6707ES) and hardware parts bag.
2. The star wheels will be placed as close to the knotter as possible. Follow installation instructions for your specific baler model.
3. Install with four (two per side) 5/16” x 3-1/4” Allen buttonhead cap screws. Make sure the Allen heads are in the bale chamber side of the star wheel.
4. The star wheel with the 6-position plug will need to be placed on the right side of the baler along with the twine diverter with two extra holes. 030-4642UE Star Wheel must rotate in the indicated clockwise direction as the bale moves thru the bale chamber. Reference the rotation indicator sticker on star wheel block.
5. The star wheel with the 2-postion plug will need to be placed on the left, or ladder side of the baler.
6. Place a spacer plate between each star wheel block and the bale chamber with twine diverter on top.
7. Secure spacer plates, star wheels and twine diverters to baler with 5/16” hex nuts and lock washers. Hand tighten with wrench or ratchet- not to exceed 13 ft-lb torque. **DO NOT USE AN IMPACT TO TIGHTEN.** Over torquing star wheel mounting hardware can cause pre-mature wear of the star wheel blocks.
8. Connect moisture harness (006-7307EM2 or 006-7307EM3) to both star wheels.
9. Route other end of (006-7303EM2 or 006-7307EM3) along top of baler to the pump module located at the back of the baler on the tank saddle.
10. Attach rectangle plug of moisture harness to bottom of ISO pump module (IPM).

The following pages contain detailed instructions for specific baler make and models:

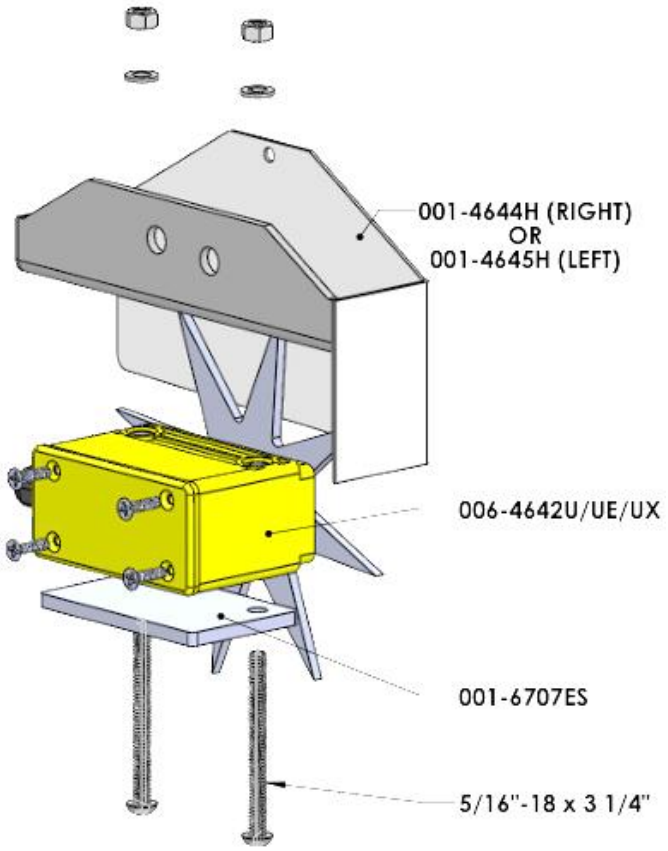

Star Wheel Sensors- 700 Series

For Large Square Balers – Reinforced Yellow Block 2026

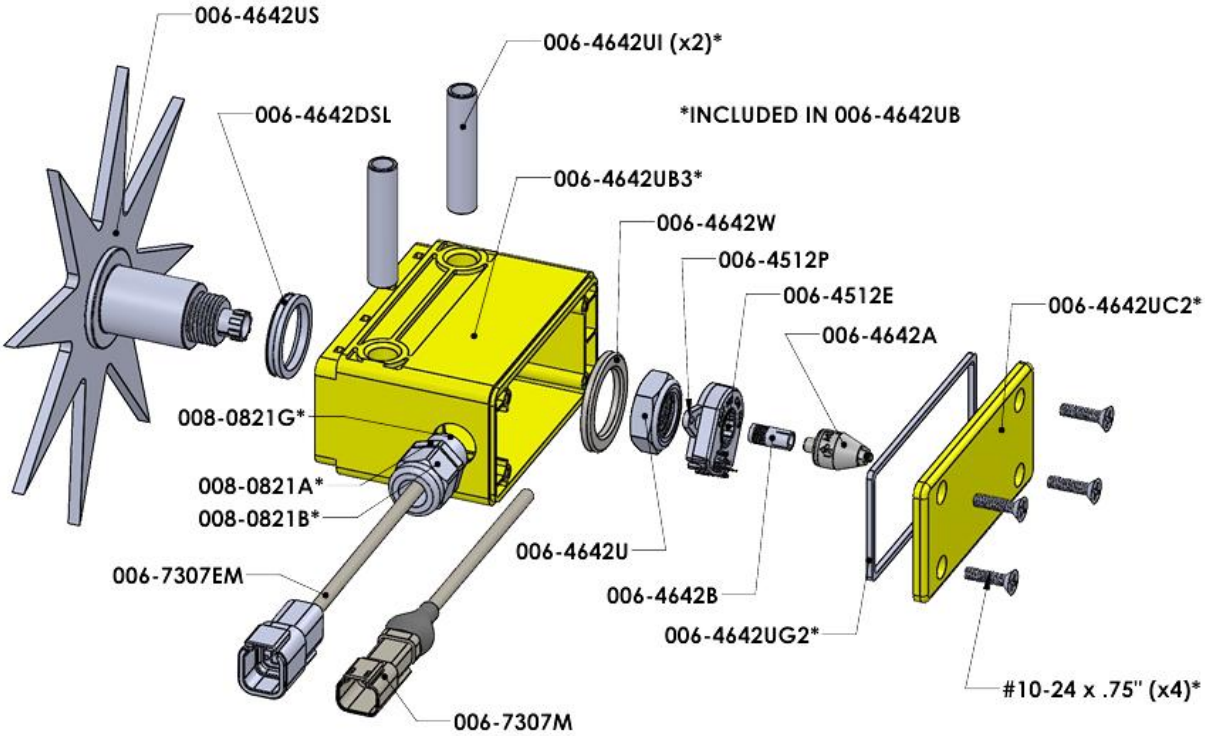

Description	Part#	Qty
Star Wheel (includes swivel insert)	006-4642US	1
Dust Seal Gasket	006-4642UG	1
Star Wheel Block Only	006-4642UB3	1
Star Wheel Block End Cap	006-4642UEC	1
Block Inserts	006-4642UI	2
Wire Compression Grommet	008-0821A	1
Grommet Locking Nut (internal)	008-0821B	1
Washer for Wire Grommet	008-0821G	1
Bearing Washer	006-4642W	1
Star Wheel Nut	006-4642U	1
Encoder Mount (030-4642UE only)	006-4512P	1
Encoder (030-4642UE only)	006-4512E	1
Swivel Insert	006-4642B	1
Swivel Insert	006-4642B	1
Electric Swivel	006-4642A	1
Electric Swivel	006-4642A	1
Star Wheel Block Gasket	006-4642UG2	1
Star Wheel Block Cover	006-4542UC2	1
Encoder Harness Plug (6 Pin) (030-4642UE only)	006-7307EM	1
Moisture Harness Plug (2 Pin) (030-4642U only)	006-7307M	1

Description	Part#	Qty
Star Wheel Spacer Plate (not pictured)	001-6707ES	1
Star Wheel Mounting Hardware (5/16" x 3-1/4" Allen Head Screws, nuts, locks and washers)		2
Twine Guard -Left	001-4645H	
Twine Guard -Right	001-4644H	
Star Wheel Drilling Template (optional)	001-4642T	
Replacement Star Wheel Block*	001-4642UB	
Complete Non-Encoder Star Wheel	**030-4642U**	
Complete Encoder Star Wheel	**030-4642UE**	
Moisture Harness- Standard (12' and 13' Section lengths)	006-7307EM2	
Moisture Harness- Long (16' and 18' section lengths)	006-7307EM3	
Complete Moisture Kit* -Standard	**MSH-LS-STD**	
Complete Moisture Kit*- Long	**MSH-LS-EXT**	

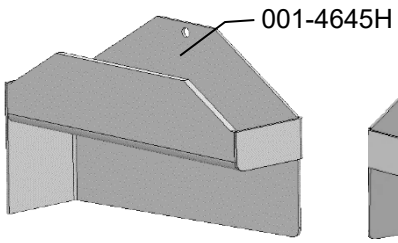

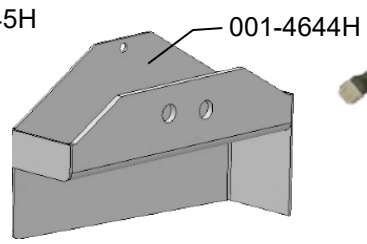

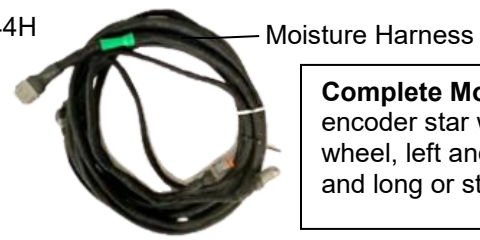

Complete Moisture Kits include encoder star wheel, non-encoder star wheel, left and right twine diverters and long or std. moisture harness.

<u>Moisture Sensor Kit</u> – (MSH-LS-STD)

Installation for 700BB systems

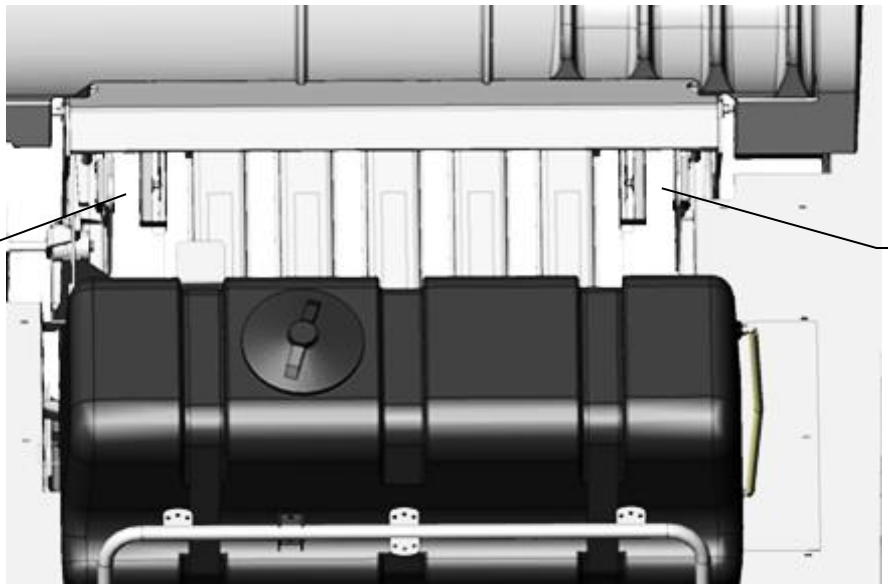

1. Locate the star wheel moisture sensors (030-4642U / UE), star wheel spacer plates (001-6707ES), twine diverters (001-4644H / 4645H) and hardware parts bag.

2. Directly behind the knotters, locate the two predrilled holes per side shown at the arrows. This location is also beneath the lift points on top of the baler.

3. Install the four (two per side) 5/16” x 3-1/4” Allen head cap screws. Make sure the Allen heads are in the bale chamber.

4. Place spacer plate between bale chamber and the star wheel block; install the star wheels below the lift points on the baler. Ensure arrow diagram is followed on back of star wheel blocks.

5. Install the twine diverters over the star wheel sensor. Note: diverter with two extra holes needs to attach to star wheel with 6 position plug.

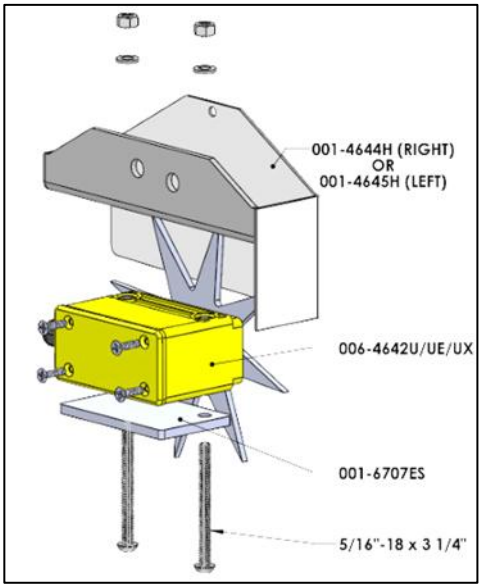

6. Secure spacer plates, star wheels and twine diverters to baler with 5/16” hex nuts and lock washers. Hand tighten with wrench or ratchet- not to exceed 13 ft-lb torque. **<u>DO NOT USE AN IMPACT TO TIGHTEN.</u>** Over torquing star wheel mounting hardware can cause pre-mature wear of the star wheel blocks.

7. Attach harness (006-7307EM2) wires to star wheels and route to (IPM) module and connect.

Star Wheel Sensors- 700 Series

For CNH HD Large Square Balers – Reinforced Yellow Block 2026

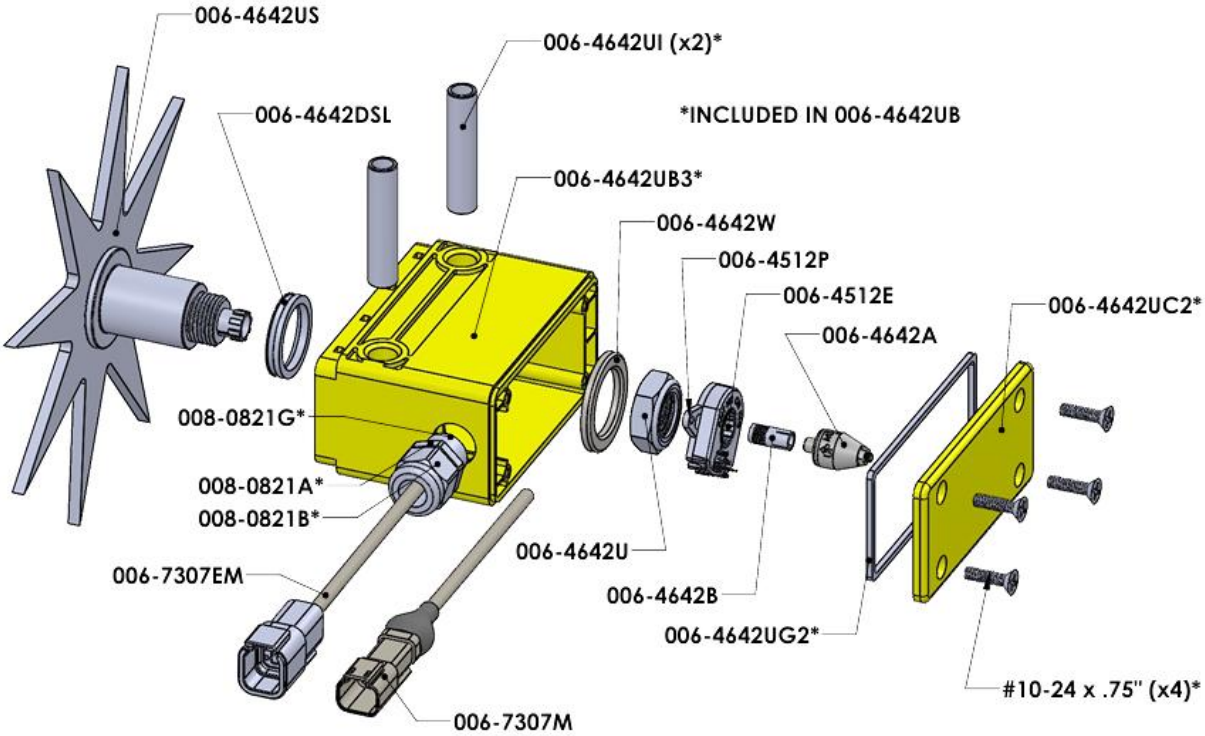

Description	Part#	Qty
Star Wheel (includes swivel insert)	006-4642US	1
Dust Seal Gasket	006-4642UG	1
Star Wheel Block Only	006-4642UB3	1
Star Wheel Block End Cap	006-4642UEC	1
Block Inserts	006-4642UI	2
Wire Compression Grommet	008-0821A	1
Grommet Locking Nut (internal)	008-0821B	1
Washer for Wire Grommet	008-0821G	1
Bearing Washer	006-4642W	1
Star Wheel Nut	006-4642U	1
Encoder Mount (030-4642UE only)	006-4512P	1
Encoder (030-4642UE only)	006-4512E	1
Swivel Insert	006-4642B	1
Swivel Insert	006-4642B	1
Electric Swivel	006-4642A	1
Electric Swivel	006-4642A	1
Star Wheel Block Gasket	006-4642UG2	1
Star Wheel Block Cover	006-4542UC2	1

Description	Part#	Qty
Encoder Harness Plug (6 Pin) (030-4642UE only)	006-7307EM	1
Moisture Harness Plug (2 Pin) (030-4642U only)	006-7307M	1
Star Wheel Reinforcement Brackets	001-464BBHD	2

Star Wheel Drilling Template (optional)	001-4642T
Replacement Star Wheel Block (includes asterisked parts in picture above)	001-4642UB
Complete Non-Encoder Star Wheel	**030-4642U**
Complete Encoder Star Wheel	**030-4642UE**
Moisture Harness- Standard (12' and 13' Section lengths)	006-7307EM2
Complete Moisture Kit*- HD Balers	**MSH-LS-BBHD**

* complete moisture kit includes one of each star wheel, two reinforcement brackets and one moisture harness

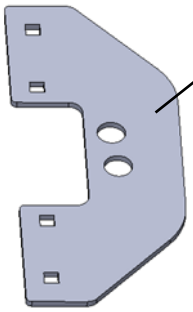

Star Wheel Reinforcement Bracket

Moisture Harness

<u>Moisture Sensor Kit</u> – (MSH-LS-BBHD)

001-4644BBHD

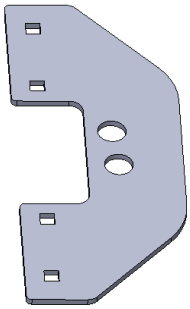

Installation for 700BBHD systems

1. Locate star wheel moisture sensors (030-4642U / UE), and star wheel reinforcement brackets (001-4644BBHD) shown right and hardware parts bag.
   Star wheel spacer plates (001-6707ES) are not used with these balers.

2. The two pre-drilled mounting holes for the star wheels are located past the knotters on the side of the top support bar running the length of the bale chute (Figure 1).

3. Position the star wheel mounting holes and mark the width of the star wheel 4” (112mm). As well as the depth of the star wheel of 2” (50mm). This piece will need to be removed from the baler bracket in order for star wheel to fit flush with baler bracket (Figure 2). After cutting touch up with paint to prevent rusting.

4. Mount star wheel with two position plug on right side of baler when looking at the back. Mount star wheel with six position plug to left side or ladder side of baler. Use hardware from parts bag (E) to mount

5. Position reinforcement brackets (001-4644BHD) around the star wheel. Shown mounted in Figure 3. Repeat mounting the star wheel and installation of the reinforcement bracket on the right side of baler. Used supplied 3/8” x 3/4” Carriage bolts and flange nuts to secure. Hand tighten with wrench or ratchet- not to exceed 13 ft-lb torque. **<u>DO NOT USE AN IMPACT TO TIGHTEN.</u>** Over torquing star wheel mounting hardware can cause pre-mature wear of the star wheel blocks.

6. Attach harness (006-7307EM2) wires to star wheels and route to (IPM) module and connect to the square plug on it.

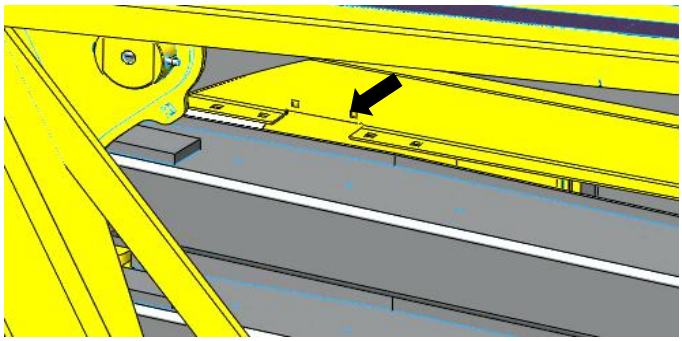

Figure 1

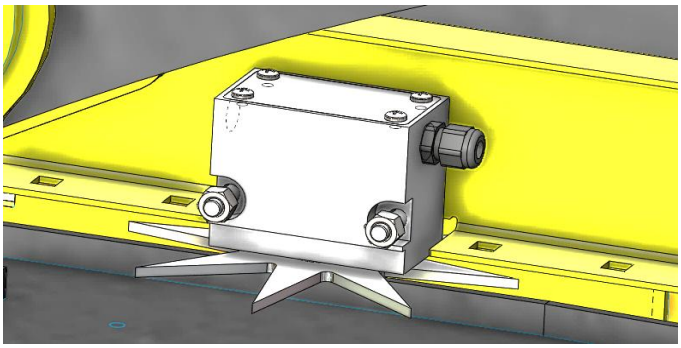

Figure 2

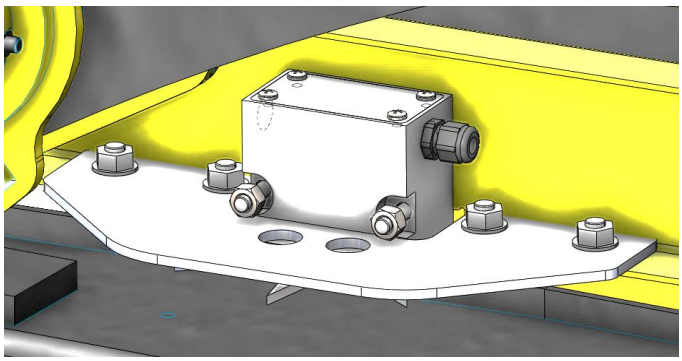

Figure 3

<u>End of Bale Sensor</u> (EOB-LS-STD)

Installation – 700BB systems

The end of bale sensor determines the position of the needles on the baler. When the needles cycle the sensor communicates this information to the Processor. This information is used for job records and will be used by the optional Bale Identification system.

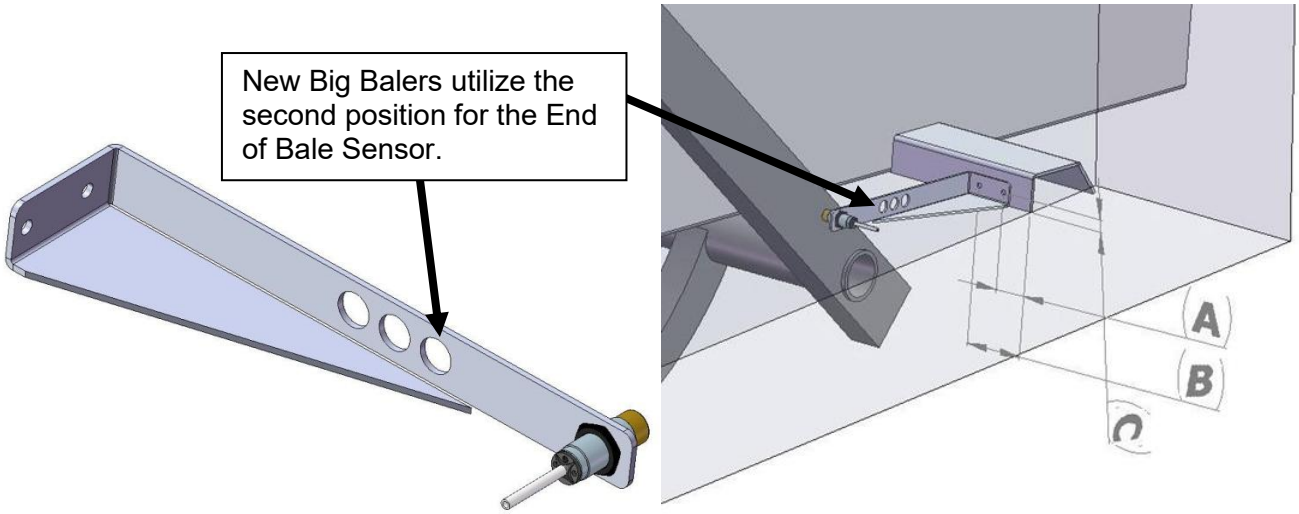

A	B	C
2-7/9”	4-3/8”	5/8”
(75mm)	(10.5cm)	(16mm)

Mount the end of bale sensor bracket (001-4648) as shown (above) on the ladder side of the baler (and same side as the main controller). Mark and drill two 3/8” (10mm) holes and attach the bracket using two 5/16” x 1” self-tapping screws, and 5/16” flange nuts. Keep the sensor 1/4" (7mm) from the needle and tighten both nuts.

New BB Balers have been installing the End of Bale Sensor in the second position and trimming off the excess steel. Run the sensor cable (006-7401) and extension (006-7401BBEXT) up to the main harness (006-765B) and attach it to the plug labeled (EOB) secure it properly out of the way of any moving parts and hydraulics.

Installation – 700BBHD systems

End of Baler Sensor Kit is NOT included with the 700BBHD system. The moisture unit will utilize the factory installed end of bale sensor on the baler by retrieving the signal through the ISOBUS connection.
Refer to the operation manual for setup details.

End of Bale Sensor

Ref	Description	Part #	Qty
1	End of Bale Sensor	006-7401	1
2	End of Bale Ext.	006-7401EXT	1
NP	EOB Bracket- BB Balers	001-4648	1
NP	EOB Bracket- BBHD Balers	001-4648NA	1

Control Box and Wiring Harnesses

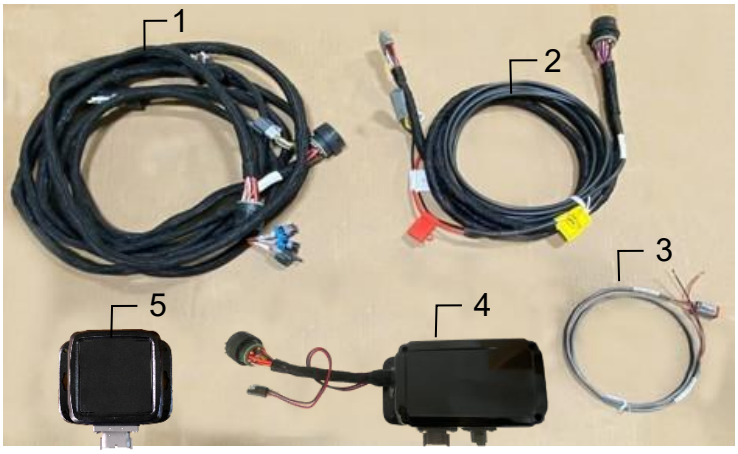

Ref	Description	Part#	Qty
1	Power Lead Baler 20’	006-765B2	1
2	Power Lead Tractor	006-765IC	1
3	Key Switch Wire	006-765CPH	1
4	ISO Pump Module	006-7671LS	1
5	ISO Comm. Module	006-6673	1
NP	Integration Harness	006-765VA	1
NP	Dust Plug Kit	006-765DP	1
NP	Opt. Tractor Harness Locking Nut Kit	006-765LNK	
NP	Opt. Term. Resistor	006-700R	
NP	Opt. Tablet Cable (USB-C to USB-A)	006-6672USBX	
NP	Opt. iPad Cable (Lightning to USB-A)	006-6672USBC	

Main Wire Harness and Connections

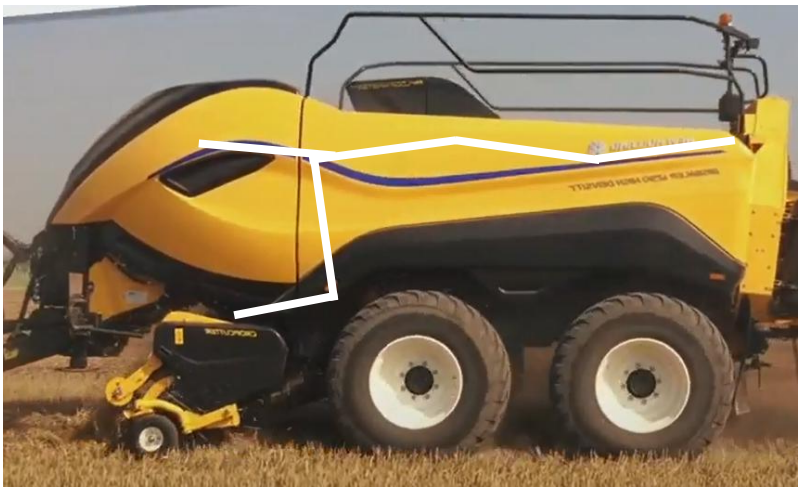

Route harness (006-765B2) along inside of the baler (left hand side). Keep harnesses away from moving parts and hydraulic hoses. Secure with existing cable clamps or use cable ties. Once all connections are made on the harness, connect to the IPM module and secure all harness wires.

Locate and remove the Active Terminator of baler (below). Attach Baler Interface Harness (006-765VA) to that location on baler.

Reconnect the baler Active Terminator to the open port near the end of the 006-765VA harness. This terminator may be located on the plate that is behind the baler's main ECM processor.

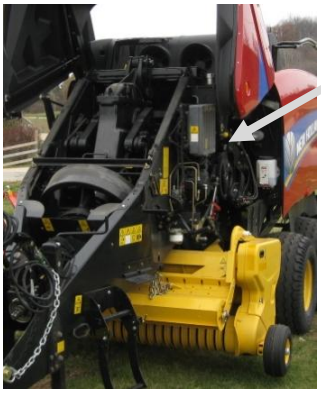

A. Route harness 006-765B2 along this path or similar inside of the baler. Keep harnesses away from moving parts and hydraulic hoses. Secure with existing cable clamps or use cable ties. When all connections are made to the ISO Pump Module (IPM) secure wires to allow for water to be shed away from the IPM.

B. The Baler Power/Communication Harness (006-765B2) will attach to the open port of the Tractor Harness (006-765IC) and run back to the ISO Pump Module (006-7671LS). Connect the large plug of the Baler Power/Communication Harness (006-765B2) to the plug of the IPM.

C. Attach Baler Interface Harness (006-765VA) to the additional CAN port at front of baler. Make sure Active Terminator is removed from the back underside of the baler is attached to the Baler Interface Harness (006-765VA).

D. Once Baler Interface Harness is connected to the CAN plug, power up the applicator system and setup baler display settings to allow Harvest Tec applicator to communicate. See ISO DISPLAY SETUP pages for further instruction on how to setup baler display settings.

Tractor Setup

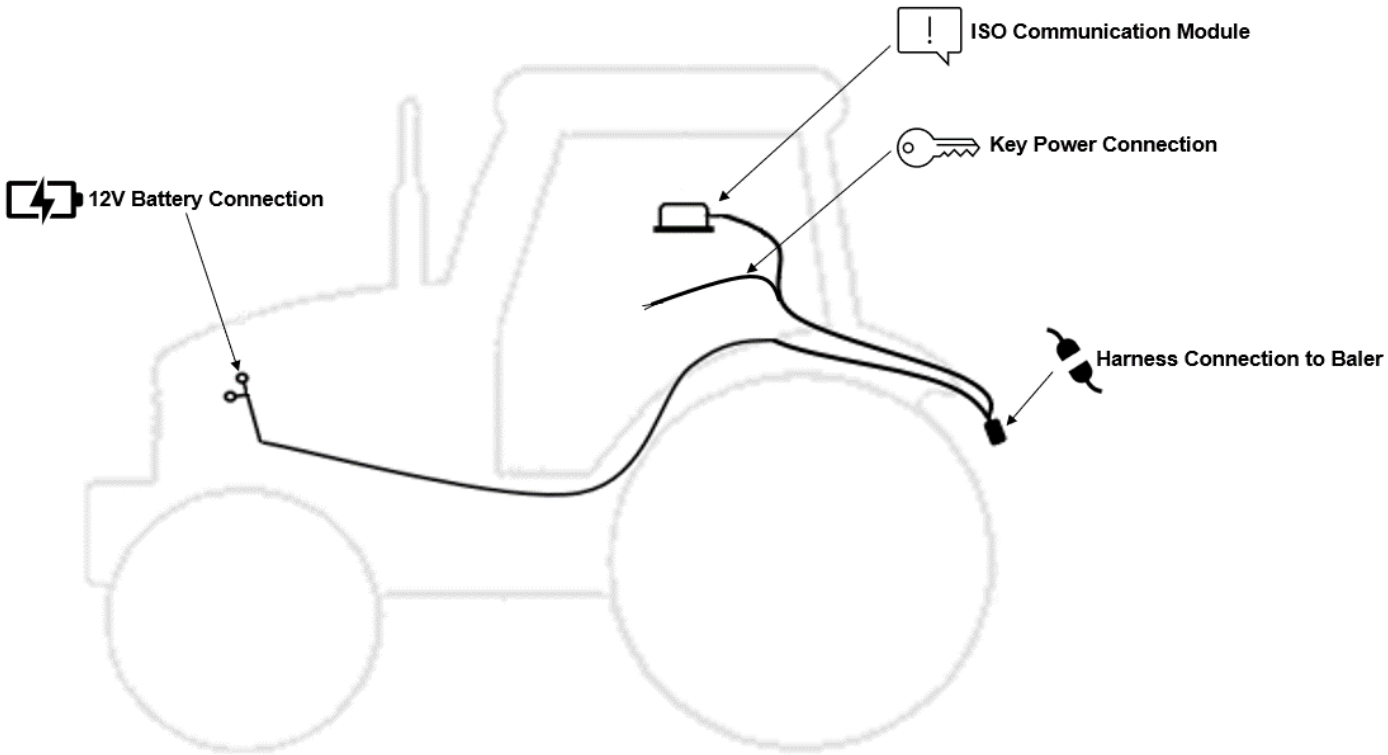

The general tractor setup of the 700 Series applicator can be seen above. The main harness of interest is the tractor power/communication harness (006-765IC). This harness will connect at the tractor battery, to the ISO Communication Module (ICM) mounted in the cab, a keyed power connection point, and connect at the hitch area to the baler power/communication harness (006-765B2). View below to see highlighted installation instruction:

12V Battery Connection	The 12V battery connection must be at the tractor battery. Connection to alternative locations such as an accessory port can cause problems with applicator system. ***MUST BE CONNECTED DIRECT TO TRACTOR BATTERY TERMINALS***
ISO Communication Module	The ISO communication module is to be mounted inside the cab. Other mounting locations can lead to issues with weathering and operation. Once installed and the system is powered, a green light will turn on the ICM module.
Key Power Connection	Ensure a solid keyed connection is found inside the cab and wired into. Poor keyed power connection can result in applicator system issues.
Harness Connection to Baler	The tractor harness connects at the hitch to baler power/communication harness (006-765B2). This will allow the system components to communicate with one another. Ensure connections are debris and corrosion free.

Display Options

Optional Harvest Tec Display

The 700 series Harvest Tec Display will allow you to set your real time baling parameters to ensure the most precise application to every bale. This is done by utilizing the improved touch technology to select objects, enter data, and swipe through operational screens.

The Harvest Tec Display offers easy integration by connecting to the additional CAN plug on the 006-765IC harness. Once, connected the Harvest Tec display will power up with applicator system.

Note: The Harvest Tec Display must be used as a standalone display, the baler cannot run both integrated and on the Harvest Tec Display. Must be one or the other. Removal of the 006-765VA or integration harness is required when equipped.

Optional Tablet Display

Precision Baling App

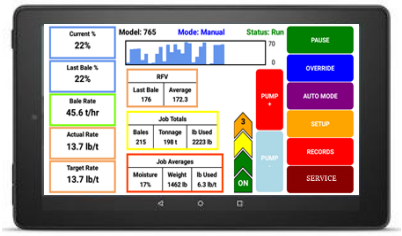

The iOS or Android Tablet displays offer the ability to communicate with the 700 series applicator system via hard-wired connection to the ISO Communication Module (ICM). Through the free Precision Baling App, the operator can set real time baling parameters to ensure the most precise application to every bale. This provides a multi-use option while utilizing the improved app to select objects, enter data, and easily switch through operational screens. The Tablet Display offers easy integration by connecting a charging cable to the USB port on the ICM module. Once connected the Harvest Tec applicator will display upon opening the app and powering up the applicator system. Tablets can be used in addition to integrated baler VT display.

***Made for iPad®**
Required to be running the most current operating system or one version previous.
*iPad is a trademark of Apple Inc., registered in the U.S. and other countries.

Optional Harvest Tec Display Kit (030-7670DK)

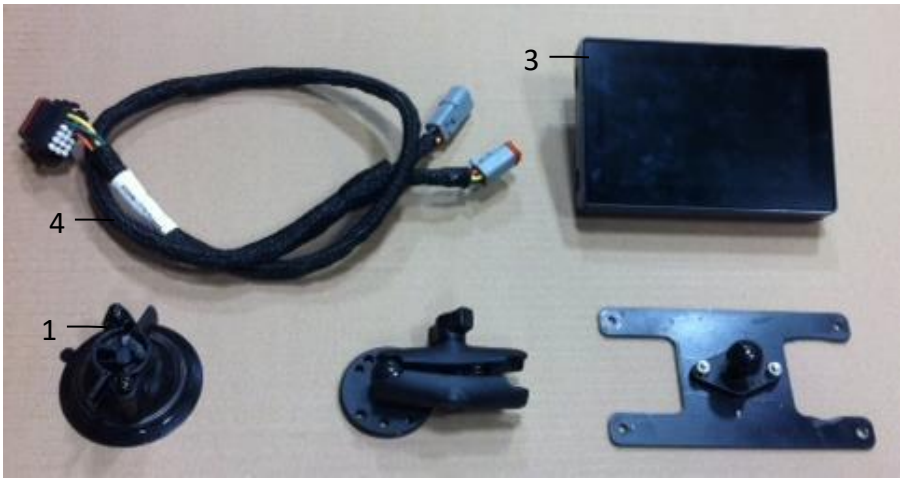

Ref	Description	Part #	Qty
1	Suction Cup Mount	001-2012SCM	1
2	Ram Mount	001-2012H	1
3	Harvest Tec Display	006-765GVT	1
4	Display Harness	006-765GH	1
5	Mounting Plate	001-700GH	1
NP	700 Series Resistor	006-700R	1

Complete HT Display Kit 030-7670DK

Installation Instructions

1. Connect 006-765GH harness connection to 006-765IC tractor harness key power plug.
2. Connect 006-765GH harness to the Harvest Tec VT Display before tightening mount in place.
3. Tighten the mounting and display. Streamline harness as necessary.
4. Once connected, power cycle the system and ensure display is working properly.

NOTE: CANNOT OPERATE APPLICATOR SYSTEM WITH HARVEST TEC DISPLAY AND BALER ISO INTEGRATION or TABLET/ iPad AT THE SAME TIME.

Optional Android Display Kit (030-1670DK)

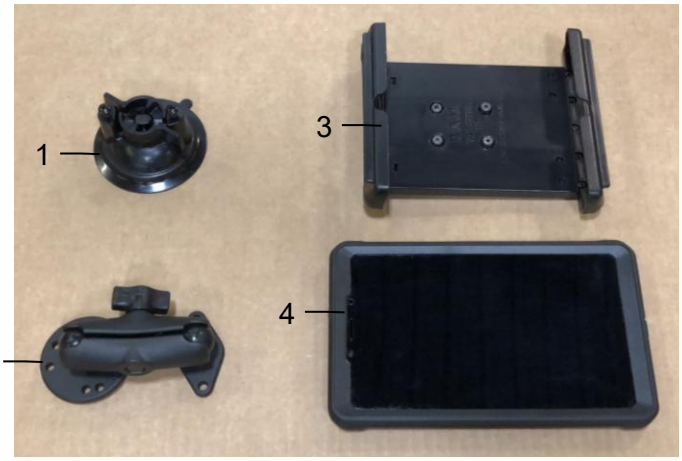

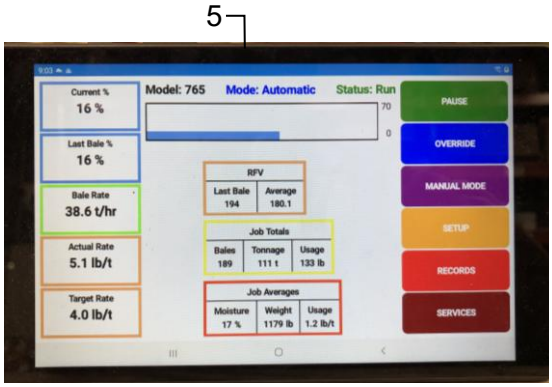

Ref	Description	Part #	Qty
1	Suction Cup Mount	001-2012SCM	1
2	Ram Mount	001-2012H	1
3	Spring Load Cradle	001-2012SLC	1
4	Android Case	001-2012A1	1
5	Android Tablet	006-1670AT	1
NP	USB-C to USB-A Cable	006-6672USBX	1

Complete Android Tablet Display Kit **030-1670DK**

Note: Use a quality communication cable ending with a USB-A connection to connect tablet to (006-765ICM) control module - plug into the USB port showing a tablet.

Optional iPad Display Kit (030-6670DK)

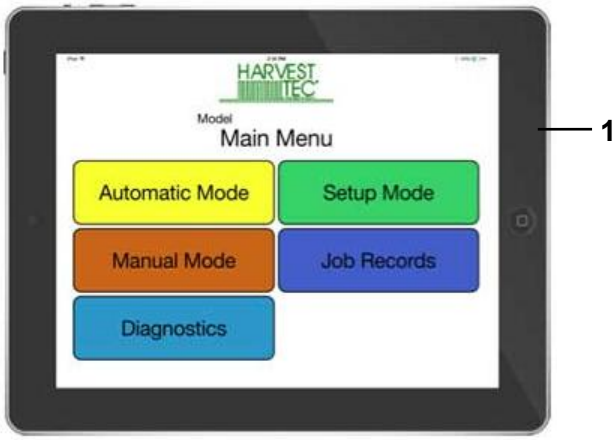

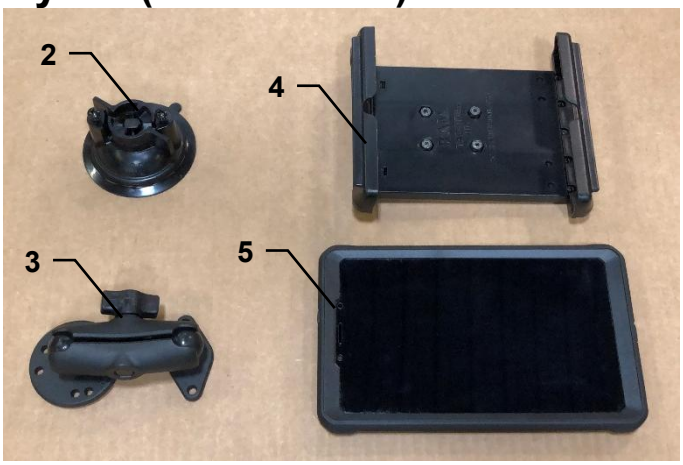

Ref	Description	Part #	Qty
1	iPad Mini 6	006-6670IP	1
2	Suction Cup Mount	001-2012SCM	1
3	Ram Mount	001-2012H	1
4	Spring Load Cradle	001-2012SLC	1
5	iPad Mini 6 Case	001-2012C6	1
NP	Power/Comm. Cable	006-6672USBX	1

Complete iPad Mini Display Kit **030-6670DK**

iPad mini is a trademark of Apple Inc., registered in the U.S. and other countries

Optional ISO Display Adapter Harness (006-7670A or 006-7670F)

For use with a dedicated ISO display

The 700 Series Applicator has the option to tie into compatible dedicated ISO monitors by utilizing the diagnostic port. When connected, the Harvest Tec System will populate as its own object pool within the ISO display. When this object pool is selected, the ISO monitor will then function as a dedicated monitor for the Harvest Tec System.

The Harvest Tec System will function as a stand-alone system when using this adapter.
System will not integrate with the baler ISO system software when using this adapter.

Any tablet connected to the ICM module must be disconnected from the ICM before the Harvest Tec Object Pool screen will activate within the ISO display.
To connect Adapter Harness (006-7670A or 006-7670F), unplug the 4-pin Key Power Plug (006-765CPH) connection from the Tractor Harness (006-765IC) and replace with the plug from the Adapter Harness. Connect the round plug end of the Adapter Harness to the Tractor ISO Display Diagnostic port.

Scan the QR code to view a short video of the
Adapter Harness for ISO Display:

For additional product and service information:
See our YouTube Channel https://www.youtube.com/@harvesttec

ISO Diagnostic Port Adapter (006-7670A)

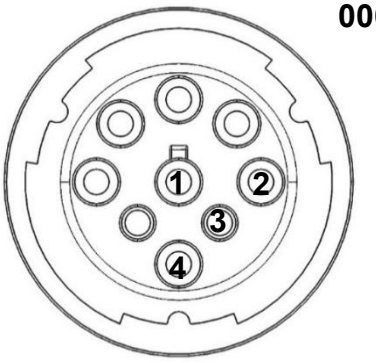

006-7670A connecting plug and pin

Pin 1	Black	Ground
Pin 2	Yellow	CAN High
Pin 3	Green	CAN Low
Pin 4	Red	12V+ Key Power

ISO Diagnostic Port Adapter (006-7670F)

For Newer Fendt and MF Tractors with plug location in the cab ceiling

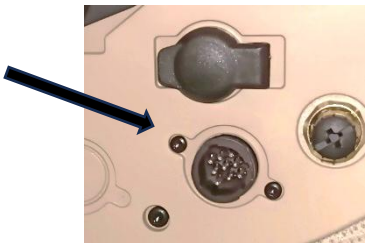

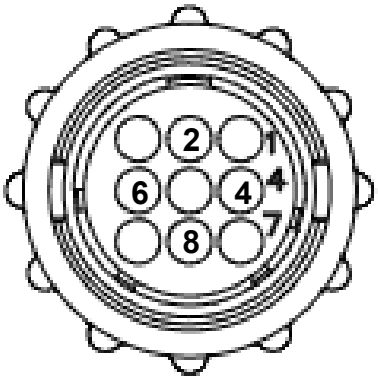

006-7670F connecting plug and pin

Pin 8	Black	Ground
Pin 4	Yellow	CAN High
Pin 2	Green	CAN Low
Pin 6	Red	12V+ Key Power

Optional Baler VT Integration

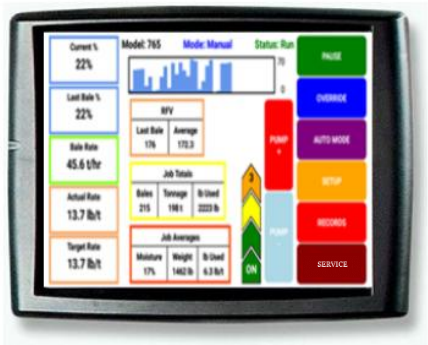

The 700 series integration to the Baler VT allows for the ability to set your real time baling though the baler VT and monitor both baler settings and Harvest Tec system parameters on one screen to ensure the most precise application to every bale.

The 700 series offers easy integration by connecting to the additional CAN plug on the 006-765B harness. Once connected the Harvest Tec system will display with power up of the baler and applicator system.

700BB Baler Display Integration

The ISOBUS Monitor utilizes touch screen options to make selections. Selections are made by finding the desired selection and pressing the touch screen icon. All buttons are labeled and color coded.

700BB Baler Display Integration

When the 700 Series is connected to the baler and powered on the first time it is necessary to load the object pools to the Virtual Terminal (VT).

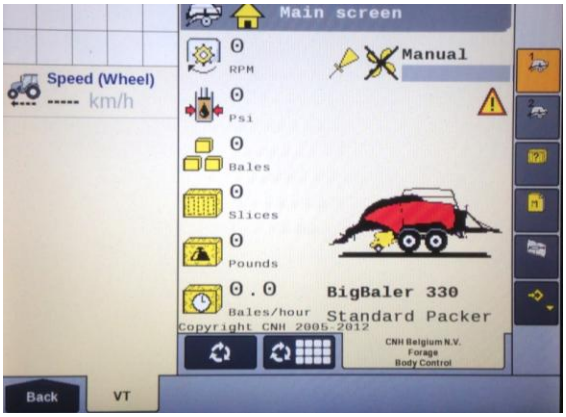

Icon (1) indicates that the object pools are in the process of loading and saving to the VT. Note that if the language selection of the VT is changed, the corresponding object pool must be reloaded to the VT. The object pool loading process takes approximately two minutes to complete.

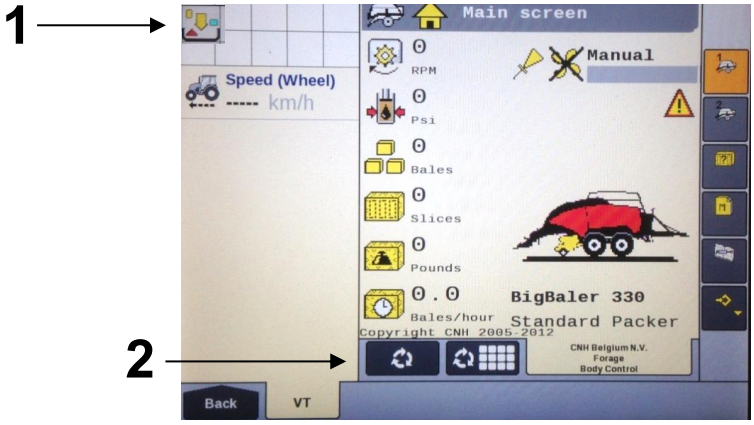

Once the object pools have been loaded and Icon (1) disappears from the upper left corner of the display, press the NEXT IMPLEMENT button (2) and verify that the 700 Series object pools appear on the Virtual Terminal.

After verifying that the 700 Series object pool is loaded and the operating screens are displayed on the VT, press the NEXT IMPLEMENT button (3) to return to the baler work screen page.

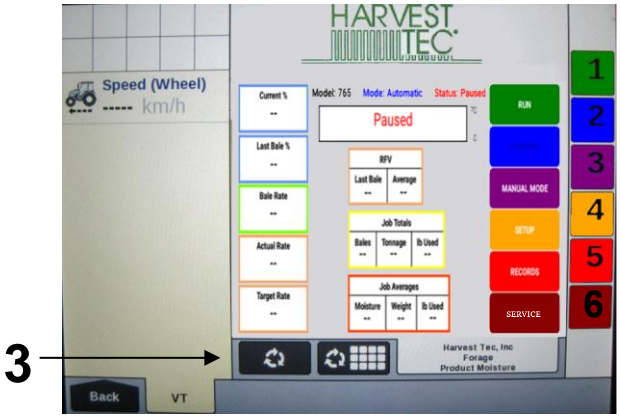

700BB Baler Display Integration (continued)

Press the bottom button of the Menu Bar with the down arrow in corner (4) on the side of the screen to continue down the Menu Bar below the USER SETTING icon.

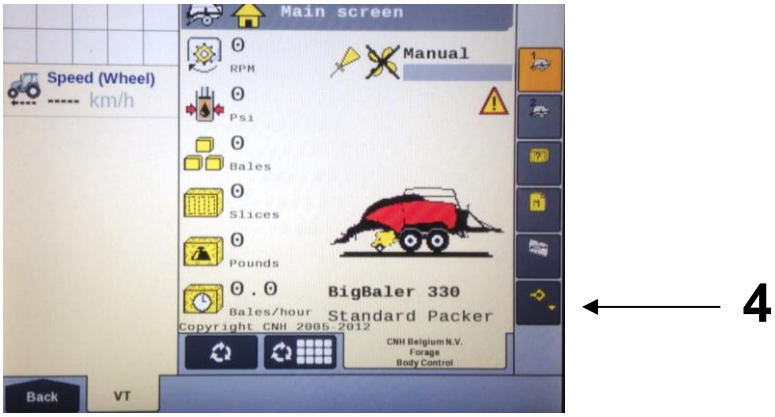

Scroll through the Menu bar until the INFORMATION icon (5) is visible. Press the INFORMATION button so the Information page appears. Verify that the controller software loaded to the baler is version 4.2.0.0 or higher. If not, contact the dealer to update firmware in Baler Control Module (BCM). If the controller software displays version 4.2.0.0 or higher proceed to configuring the baler for the 700 series system by pressing the MACHINE SETUP button (6).

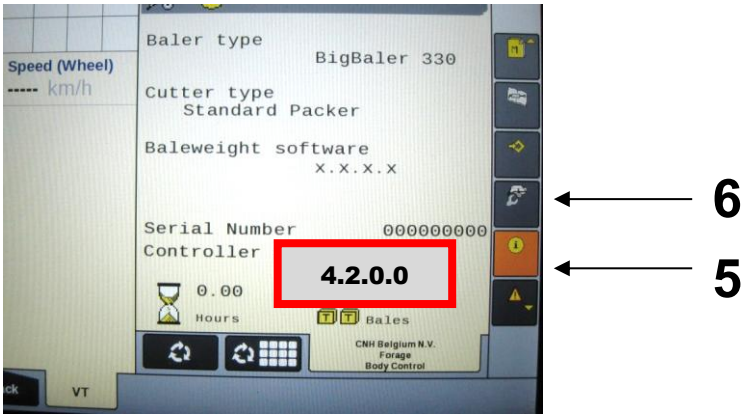

Once the MACHINE SETUP icon has been selected, the Machine Setup page will appear, and the icon will be backlit in orange. Press the MACHINE SETUP icon (7) again to go to the second page of the Machine Setup.

700BB Baler Display Integration (continued)

The second page of the Machine setup is identified by the three gray buttons in the Menu Bar. Press and hold the third gray button (8) for 10 seconds or until the display switches to displaying Dealer Mode.

Once Dealer Mode has been entered, select the down arrow in the Menu Bar (9) to scroll to the second Dealer Mode Screen where 'Moisture' is a selection.

Once you have reached the second Dealer Mode screen, select the area under 'Moisture '(10). Note that the box below 'Moisture' will likely be the default "NOT INSTALLED".

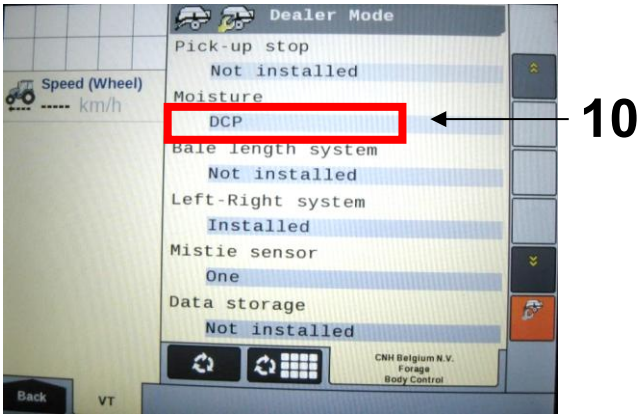

700BB Baler Display Integration (continued)

Select the proper configuration setting from the pop-up menu (11), based on the configuration of your 700 series system. This configuration setting allows the baler to properly display the information it is receiving from the 700 series system on the baler working screen. Select “DCP.”

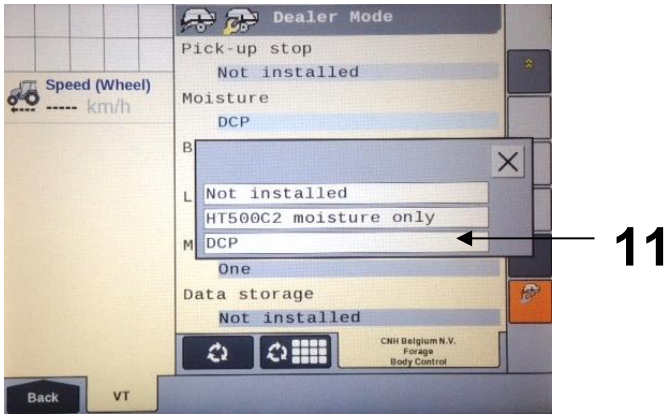

Once the configuration has been set press the MACHINE SETUP icon (12) to return to the Machine Setup Screen and the Menu Bar.

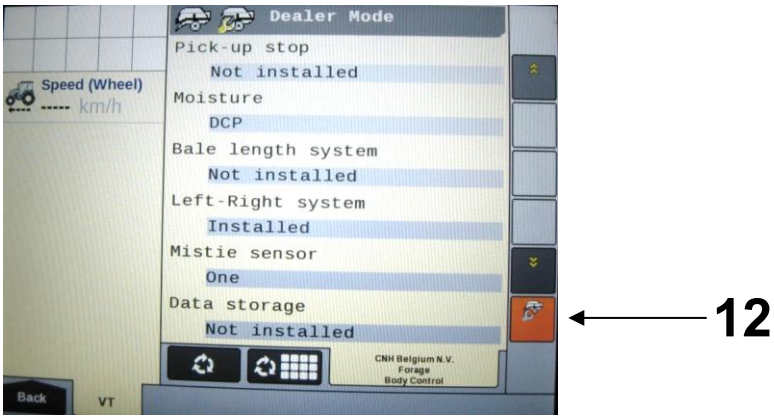

Press the arrow down button at the bottom of the Menu Bar (13) to scroll down thru the Menu Bar until you reach the SCREEN SETUP pages.

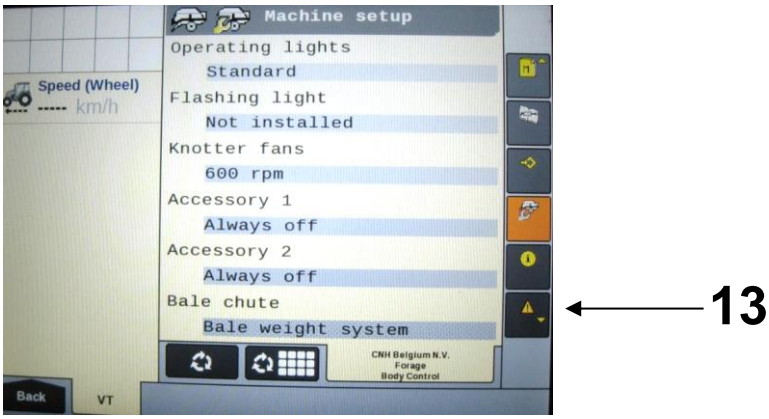

700BB Baler Display Integration (continued)

Select the icon for SCREEN SETUP 1 (14) so the Screen Setup 1 screen appears. Select how you would like to have the screen configured to show a combination of baler and 700 series system information by selecting the boxes. When you select one of the boxes, a pop-up screen will appear that shows the selections available.

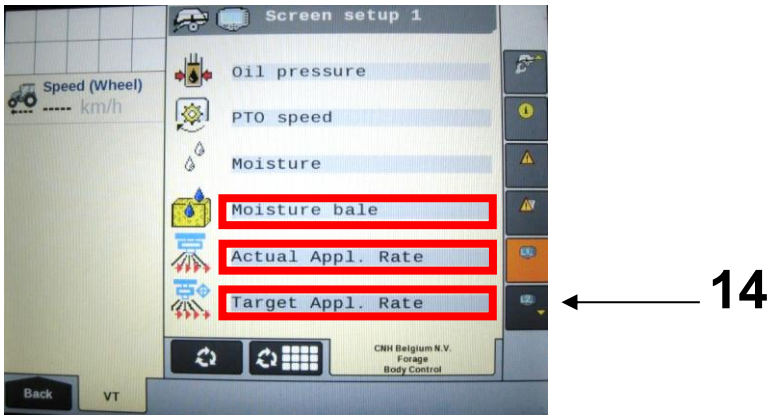

Selections related to the 700 series system include Moisture, Moisture Bale, Target Application rate, and Actual Application Rate, and are highlighted by arrows above and in the next picture. Scroll to additional options in the popup window by pressing the down arrow on the side of the popup window (15).

Once the Screen Setup pages have been configured, scroll back up to the top of the Menu Bar by pressing the top button in the Menu Bar with the up arrow (16).

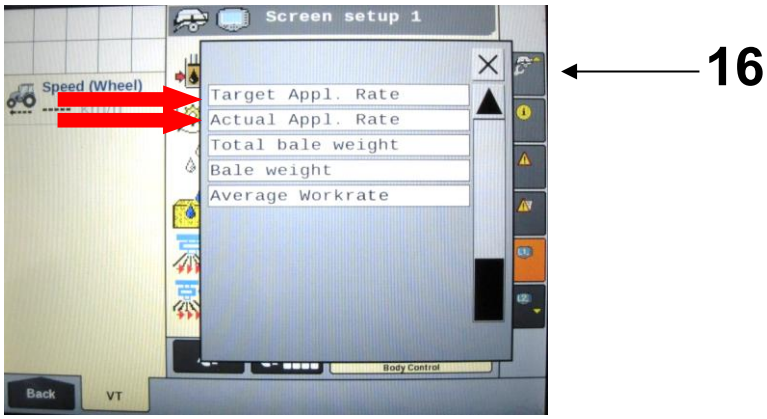

700BB Baler Display Integration (continued)

Select the FIELD SETTING icon (17) and adjust the Moisture Alarm Settings in the Field Setting Screen. Note that the low moisture alarm must be set lower than the high moisture alarm. The moisture alarms can be turned off by setting the low setting <9% and the high setting >70%. When the alarms are turned off, they will say OFF next to the values. Select the MAIN SCREEN 1 icon (18) from the Menu Bar.

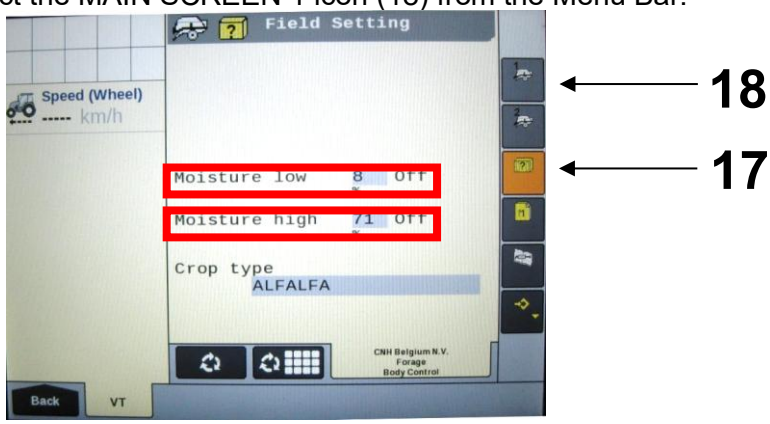

Verify that your MAIN SCREEN 1 and MAIN SCREEN 2 are configured as you would like them displaying the information you would like visible during operation. During operation, information for the 700 series system that you have chosen to display will be displayed on the Baler Work Screen.

Cycle back and forth between the Baler Work Screen and the 700 Series System Work Screen by pressing the NEXT IMPLEMENT button (19) during operation.

Harvest Tec Icons signified by arrows 19-25 are as follows**:**

(19) Next Implement Button
(20) Moisture Content %
(21) Last Bale Average Moisture Content %
(22) Actual Application Rate of Preservative
(23) Target Application Rate of Preservative
(24) IPM Status Icon
(25) Tagger Status Icon

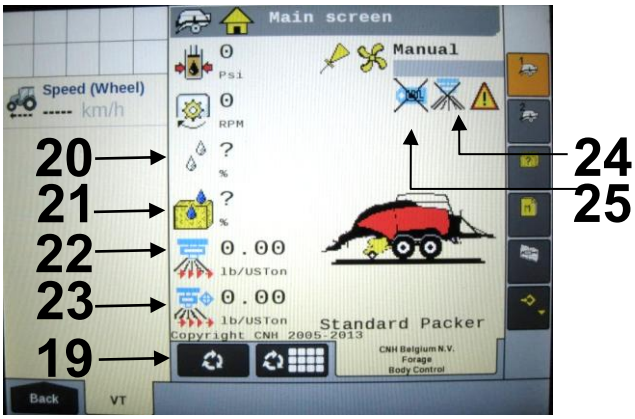

The status icon (24) indicates the system is connected to the baler. An “X” over the status icon indicates the system is:

A) Not in an application mode
B) Paused through
   a. Manual Pause
   b. Hay Indicator Pause
   c. Baler End of Row (EOR) Pause (PTO speed < 600 rpm)

When the Tagger Status Icon (25) is visible the system is indicating the Tagger is activated. When the system is not in application mode or has been paused there will be an “X” over the Tagger Status Icon.

Refer to the Operation manual for the 700 Series Large Square Baler Models to view the operation details.

700BBHD Integration Instructions

Follow the steps below to setup the integration of the 700 Series into the Pro 1200 Series Monitor.

1. Select the baler Setup tab in the top right corner of the baler run screen.

2. Open the Diagnostics tab by pressing the (stethoscope icon) and select the System Information tab.

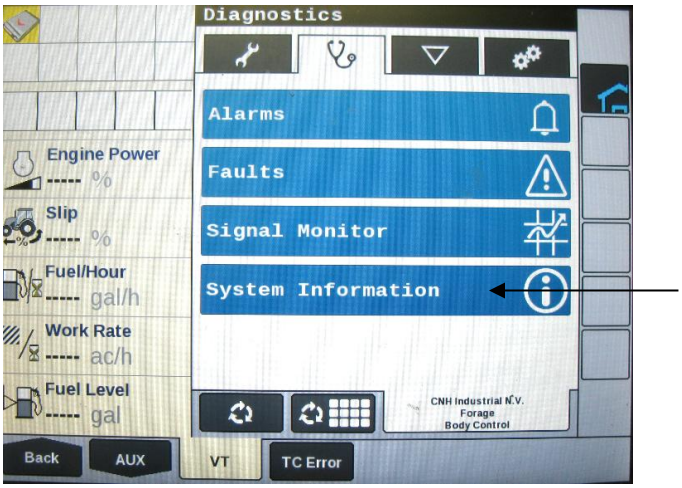

3. On the System Information page press and hold the first blank square box under the down arrow on the right side of the screen for 10 Seconds.

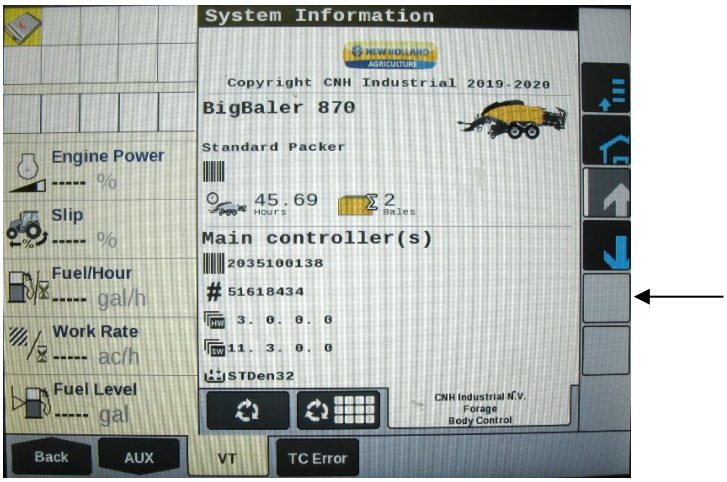

700BBHD Integration Instructions (continued)

4. After 10 seconds the first screen below will appear prompting you for a code. Press the ‘0’ and enter the Code 1379 when the numbers appear.

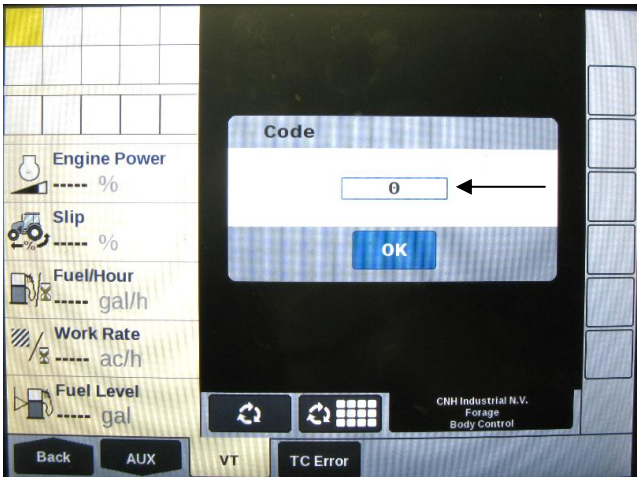

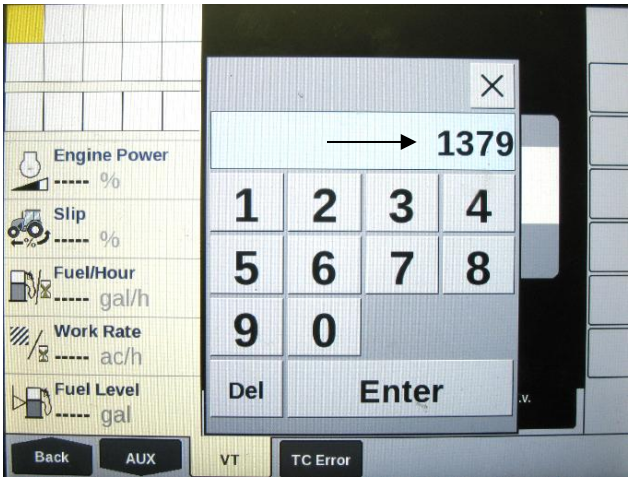

The screen below will appear alerting you ‘Dealer Mode Activated’. Press OK and go back to the balers home screen.

5. Select the baler Setup tab in the top right corner of the baler run screen. Then press Machine Configuration from the baler setup page (wench icon at top).

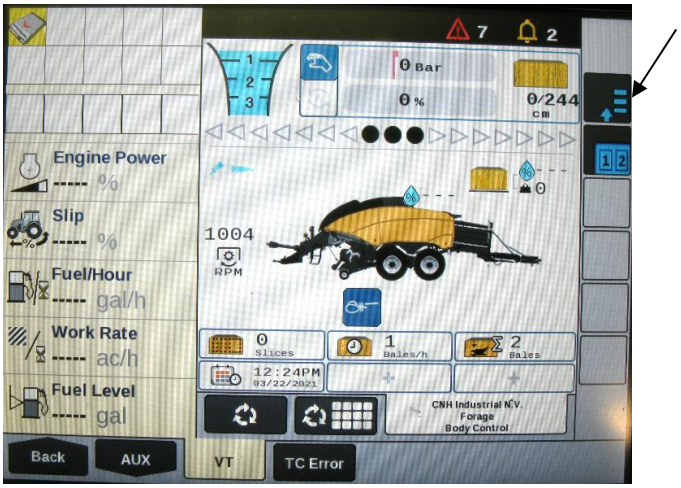

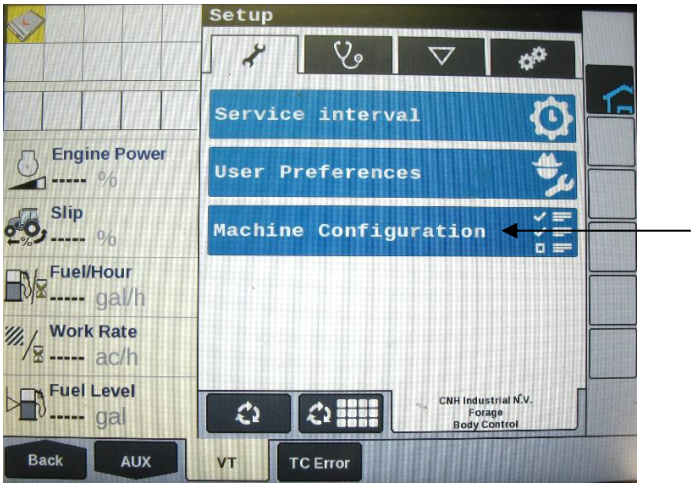

700BBHD Integration Instructions (continued)

6. Select the Moisture Sensor line on the Machine Configuration screen. On the next screen that appears select DCP from the drop down

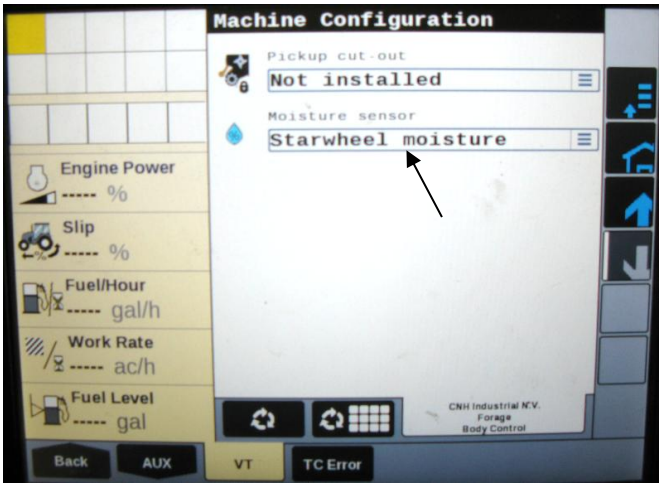

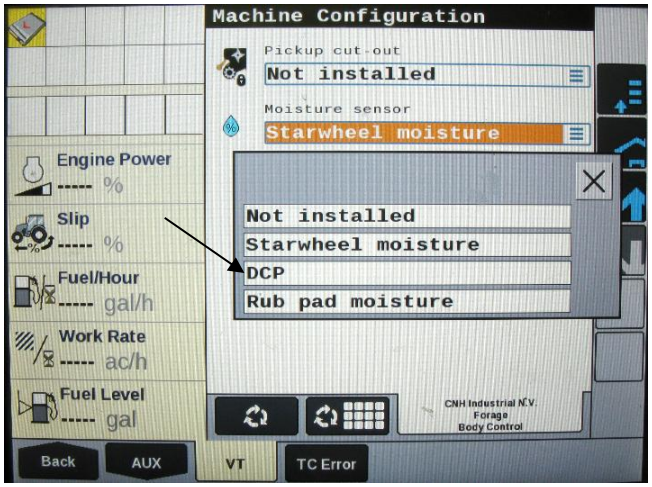

The moisture sensor selection will now read DCP on the Machine Configuration page.

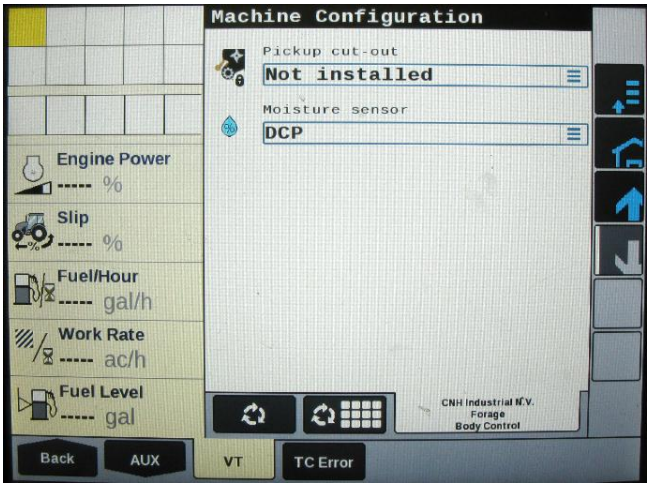

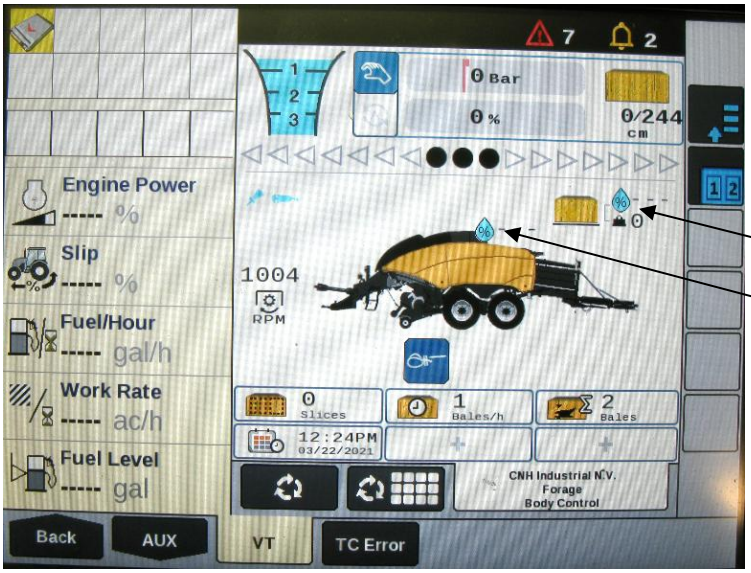

The current bale moisture content will now display above the baler next to the water droplet and the previous bale moisture will display next to the bale in above the are above the bale chute (below).

Previous Bale Moisture

Current Bale Moisture

Refer to the Operation manual for the 700 Series Large Square Baler Models to view the operation details.

Wiring Diagram – 700 Series Moisture Only

1. Connect the power harness (006-765IC) to the tractor battery (12 volt) using the red wire with fuse to the positive side and the black wire to the negative.
   A. **The power harness must be connected to the battery!**
      CONTACT HARVEST TEC BEFORE MODIFICATIONS.
      The unit will draw more amps than convenience outlets can handle. Any modifications of the power harness will void systems warranty
   B. **This unit will not function on positive ground tractors.**
   C. **If the unit loses power while operating it will not keep track of accumulated pounds of product used.**
2. The power harness on the tractor (006-765IC) will run from the tractor battery to the hitch. The power harness on the baler (006-765B2) will connect to the tractor power harness (006-765IC) at the hitch.
3. Connect the keyed power wire (006-765CPH) to a keyed power source on the tractor.
   The keyed power wire must connect to a keyed source or the unit will not power up correctly.
4. Attached the ISO Communication Module (006-6673) to the tractor power harness (006-765IC).
5. Attach the End of Bale (EOB) connection on baler harness (006-765B2) to the EOB Sensor (006-7401).
6. Attach star wheel (030-4642 U/UE) connection to IPM.

System Wiring Diagram

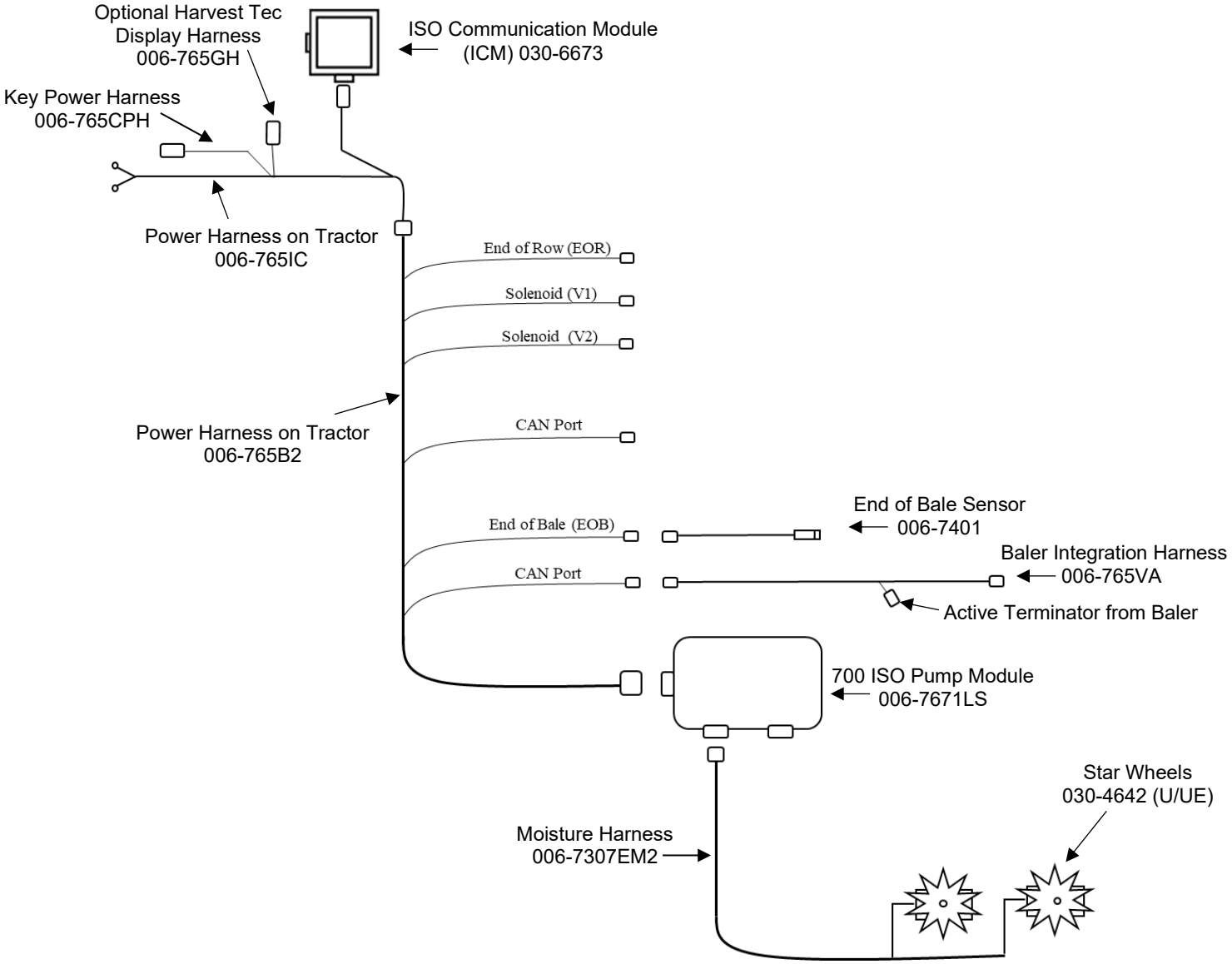

Pin Outs

Integrated Control Module (ICM) on Tractor Harness 006-765IC
(Deutsch Plug Number: DTM06-12SA)

Pin 1	Red	+12V from ECU
Pin 2	Purple	Signal Wire
Pin 3	Red/White	+12V CAN X
Pin 4	Black/White	Ground CAN X
Pin 5	Orange	CAN X Hi
Pin 6	Blue	CAN X Lo
Pin 7	Green	ISO CAN Lo
Pin 8	Yellow	ISO CAN Hi
Pin 9	White	GPS Expansion 1
Pin 10	Gray	GPS Expansion 2
Pin 11	Brown	GPS Expansion 3
Pin 12	Black	Ground from ECU

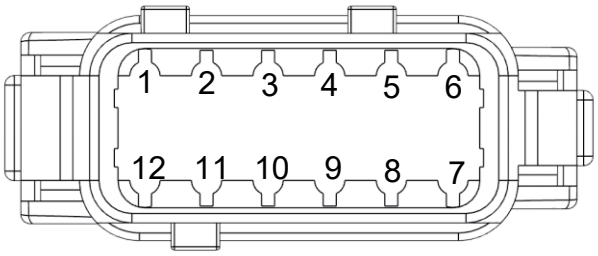

ISOBUS Plug on Tractor Harness 006-765IC
(Deutsch Plug Number: DT04-4P)

Pin 1	Red	+12V from ECU
Pin 2	Yellow	ISO CAN Hi
Pin 3	Green	ISO CAN Lo
Pin 4	Black	Ground from ECU

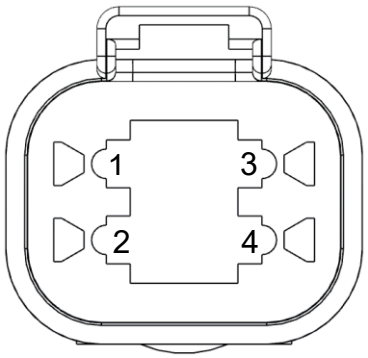

Power / Communication Tractor Harness 006-765IC at Baler Hitch
(Deutsch Plug Number: HDP24-24-18PN)

Pin 1	Not Used	----
Pin 2	Yellow	ISO CAN Hi
Pin 3	Green	ISO CAN Lo
Pin 4	Red	+12V Power to ECU
Pin 5	Black	Ground to ECU
Pin 6	Red	+12V From Battery
Pin 7	Not Used	----
Pin 8	Black	Ground From Battery
Pin 9	Not Used	----
Pin 10	Purple	Signal Wire
Pin 11	Red/White	+12V CAN X
Pin 12	Black/White	Ground CAN X
Pin 13	Orange	CAN X Hi
Pin 14	Blue	CAN X Lo
Pin 15	White	GPS Expansion 1
Pin 16	Gray	GPS Expansion 2
Pin 17	Brown	GPS Expansion 3
Pin 18	Not Used	----

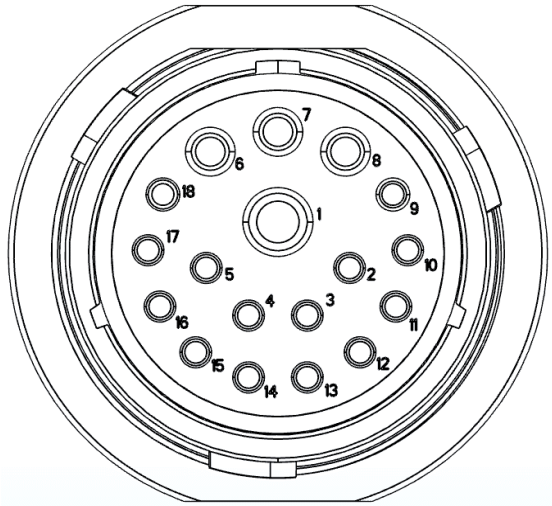

Pin Outs (continued)

Power / Communication Baler Harness 006-765B2 at Baler Hitch
(Deutsch Plug Number: HDP26-24-18SN)

Pin 1	Not Used	----
Pin 2	Yellow	ISO CAN Hi
Pin 3	Green	ISO CAN Lo
Pin 4	Red	+12V Power to ECU
Pin 5	Black	Ground to ECU
Pin 6	Red	+12V From Battery
Pin 7	Not Used	----
Pin 8	Black	Ground From Battery
Pin 9	Not Used	----
Pin 10	Orange/White	+12V Power to EOR
Pin 11	Not Used	----
Pin 12	Not Used	----
Pin 13	Not Used	----
Pin 14	Not Used	----
Pin 15	Not Used	----
Pin 16	Not Used	----
Pin 17	Not Used	----
Pin 18	Not Used	----

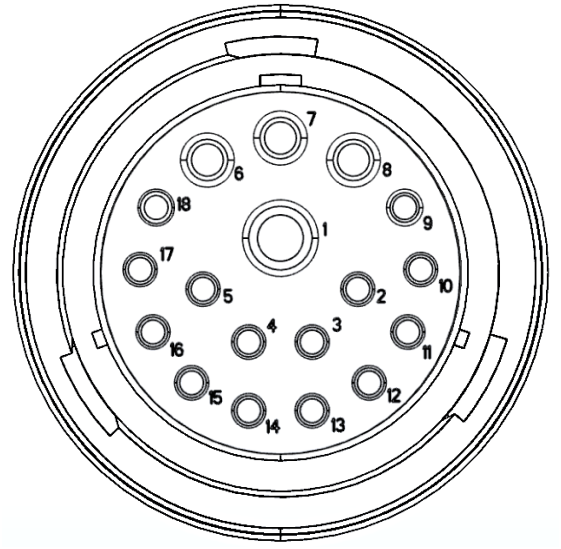

Power / Communication Baler Harness 006-765B2 at IPM Module
(Deutsch Plug Number: HDP24-24-18SN)

Pin 1	Not Used	----
Pin 2	Yellow	ISO CAN Hi
Pin 3	Green	ISO CAN Lo
Pin 4	Red	+12V Power to ECU
Pin 5	Black	Ground to ECU
Pin 6	Red	+12V From Battery
Pin 7	Not Used	----
Pin 8	Black	Ground From Battery
Pin 9	Not Used	----
Pin 10	Orange/White	+12V Power to EOR
Pin 11	Orange/Black	Ground to EOR
Pin 12	Purple/Green	EOR Signal
Pin 13	Blue/White	EOB Signal
Pin 14	Gray/Red	+12V Power to Solenoid 1
Pin 15	White/Black	Ground to Solenoid 1
Pin 16	Orange/Red	+12V Power to Solenoid 2
Pin 17	White/Black	Ground to Solenoid 2
Pin 18	Not Used	----

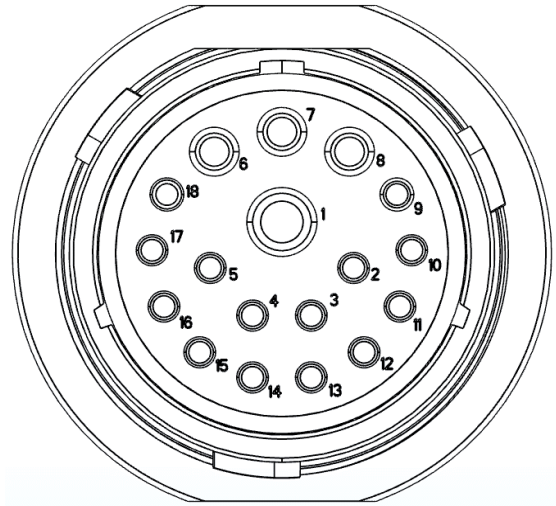

*IPM Module Whip Plug- Pin # 5 Not Used

Solenoid 1 Plug on Baler Harness 006-765B2
(Deutsch Plug Number: APTIV 12052641)

Pin B	Gray/Red	+12V to Solenoid 1
Pin A	White/Black	Ground to Solenoid 1

Solenoid 2 Plug on Baler Harness 006-765B2
(Deutsch Plug Number: APTIV 12052641)

Pin B	Orange/Red	+12V to Solenoid 2
Pin A	White/Black	Ground to Solenoid 2

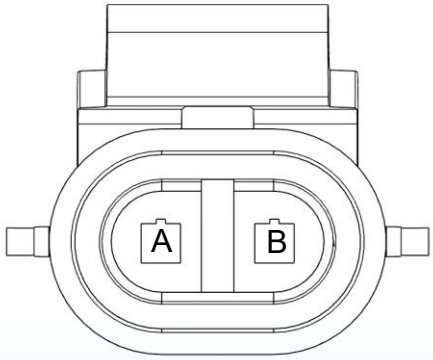

Pin Outs (continued)

CAN / IDM on Baler Harness 006-765B2
(Deutsch Plug Number: DT06-4S)

Pin 1	Red	+12V to ECU
Pin 2	Yellow	ISO CAN Hi
Pin 3	Green	ISO CAN Lo
Pin 4	Black	Ground to ECU

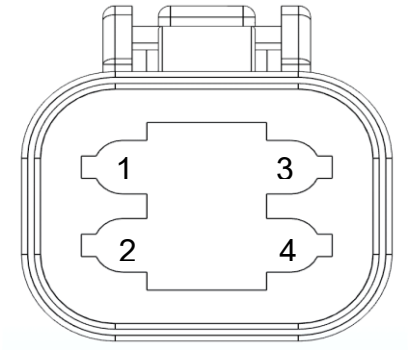

End of Bale Sensor Plug on Baler Harness 006-765B2
(Deutsch Plug Number: DT06-3S)

Pin 1	Orange/White	+12V to End of Bale Sensors
Pin 2	Orange/Black	Ground to End of Bale Sensors
Pin 3	Blue/White	Signal

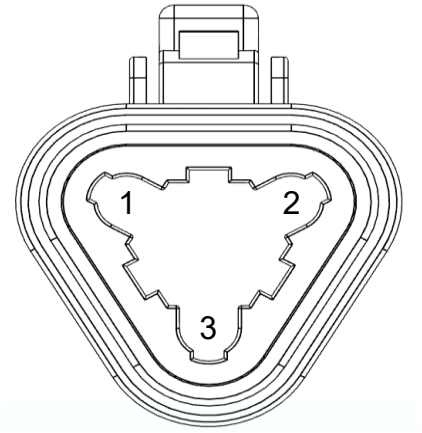

End of Row Sensors Plug on Baler Harness 006-765B2
(Deutsch Plug Number: DT06-3S)

Pin 1	Orange/White	+12V to End of Bale Sensors
Pin 2	Orange/Black	Ground to End of Bale Sensors
Pin 3	Blue/White	Signal

Integration Harness Plug on Baler Harness 006-765VA
(Plug: APTIV 12052848)

Pin A	Not Used	----
Pin B	Red	TBC Power
Pin C	Not Used	----
Pin D	Gray	TBC Ground
Pin E	Orange	CAN Hi
Pin F	Blue	CAN Lo

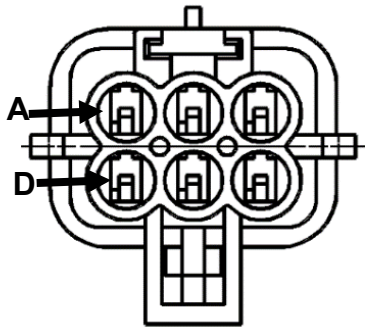

Pump Connection on 700 Controller Harness
(16 AWG Two-Wire Plug)

Pin 1	Red	Power to Pump
Pin 2	Black	Ground to Pump

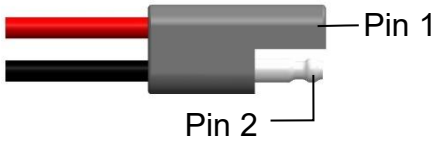

Harvest Tec LLC. Warranty and Liability Agreement

Harvest Tec, LLC. will repair or replace components that are found to be defective within 12 months from the date of manufacture. Under no circumstances does this warranty cover any components which in the opinion of Harvest Tec, LLC. have been subjected to negligent use, misuse, alteration, accident, or if repairs have been made with parts other than those manufactured and obtainable from Harvest Tec, LLC.

Our obligation under this warranty is limited to repairing or replacing free of charge to the original purchaser any part that in our judgment shows evidence of defective or improper workmanship, provided the part is returned to Harvest Tec, LLC. within 30 days of the failure. If it is determined that a non-Harvest Tec manufactured product has been used inside the Harvest Tec applicator system where the failure occurred, then Harvest Tec reserves the right to deny the warranty request at their discretion. Parts must be returned through the selling dealer and distributor, transportation charges prepaid.

This warranty shall not be interpreted to render Harvest Tec, LLC. liable for injury or damages of any kind, direct, consequential, or contingent, to persons or property. Furthermore, this warranty does not extend to loss of crop, losses caused by delays or any expense prospective profits or for any other reason. Harvest Tec, LLC. shall not be liable for any recovery greater in amount than the cost or repair of defects in workmanship.

There are no warranties, either expressed or implied, of merchantability or fitness for particular purpose intended or fitness for any other reason. This warranty cannot guarantee that existing conditions beyond the control of Harvest Tec, LLC. will not affect our ability to obtain materials or manufacture necessary replacement parts.

Harvest Tec, LLC. reserves the right to make design changes, improve design, or change specifications, at any time without any contingent obligation to purchasers of machines and parts previously sold.

Revised 1/24

HARVEST TEC, LLC.
P.O. BOX 63
2821 HARVEY STREET
HUDSON, WI 54016 USA
PHONE: 715-386-9100
FAX: 715-381-1792
Email: info@harvesttec.com